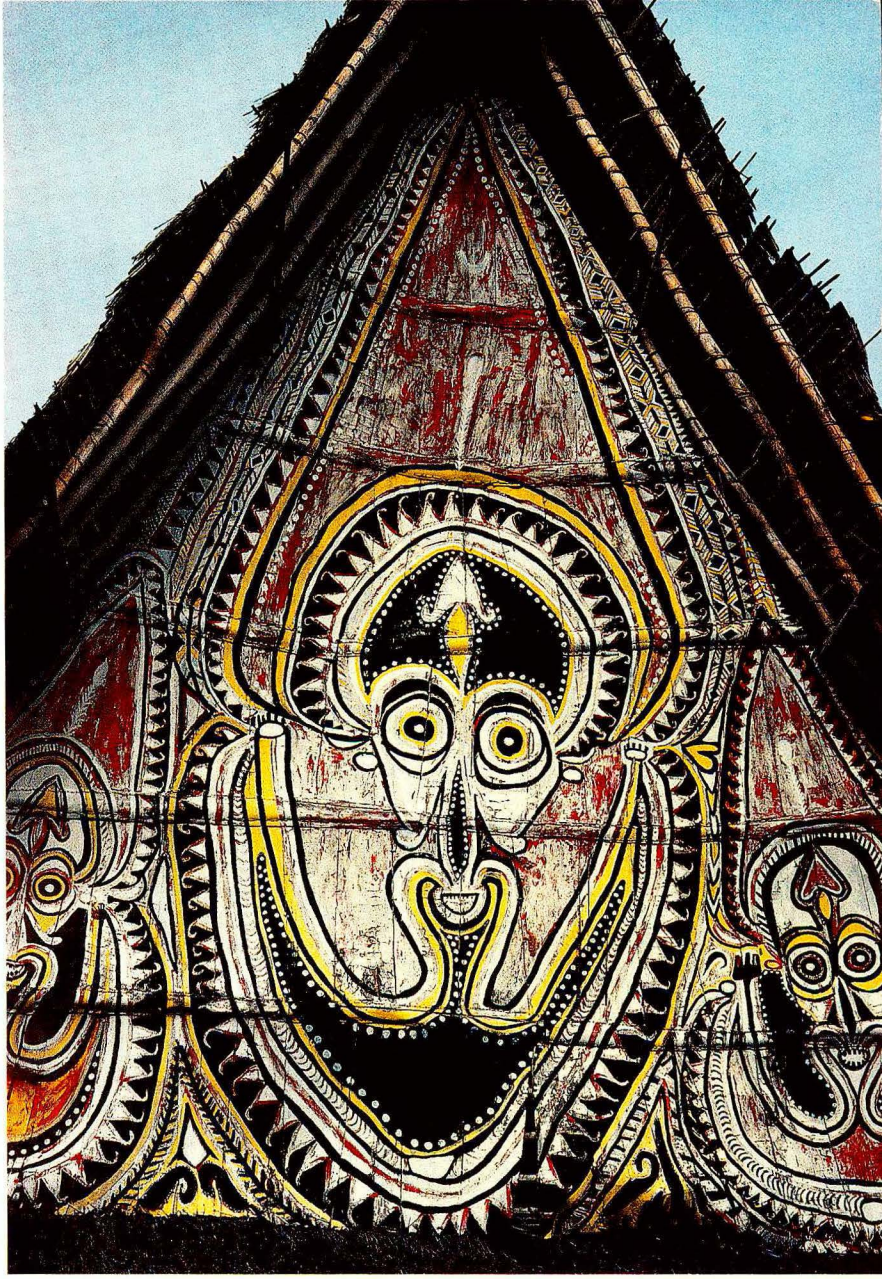

Band 40

Basler Beiträge zur Ethnologie

Nigel A. Stephenson

Kastom or Komuniti

A Study of Social Process and Change among the Wam People, East Sepik Province, Papua New Guinea

Basel 2001

Ethnologisches Seminar der Universität
und Museum der Kulturen Basel

New Guinea Island
Manus Island
Jayapura
Lake Sentani
Vanimo
Wewak
Bismarck Archipelago
New Ireland
Rabaul
New Britain
GUINEA
Milne Bay
1000 km
140°
150°

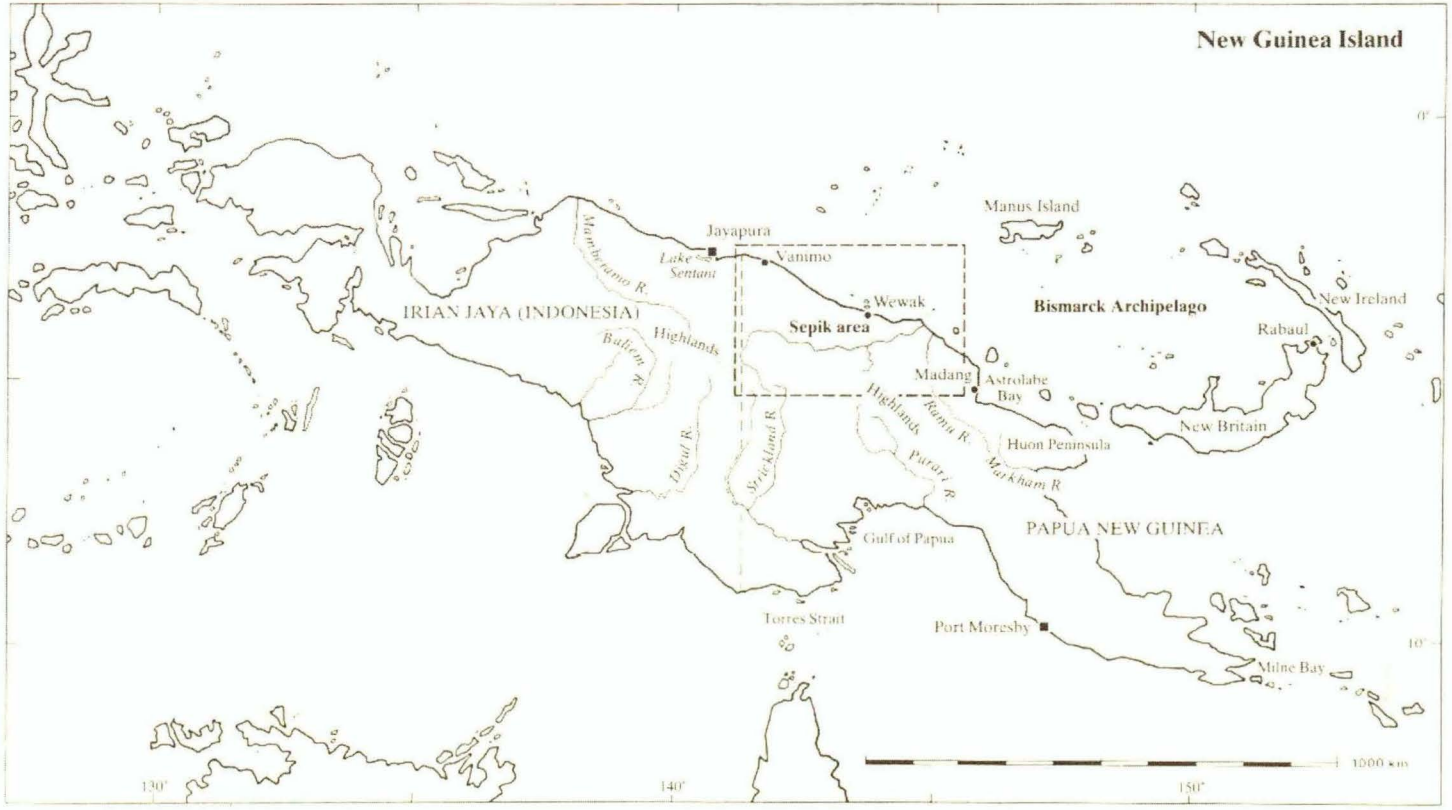
New Guinea Island
Javapura
Vanimo
Lake Sentani
Mamberamo R.
IRIAN JAYA (INDONESIA)
Baliem R.
Highlands
Digul R.
Strickland R.
Wewak
Sepik area
Madang
Highlands
Ramu R.
Purari R.
Gulf of Papua
Torres Strait
Port Moresby
Manus Island
Bismarck Archipelago
New Ireland
Rabaul
Astrolabe Bay
New Britain
Huon Peninsula
Markham R.
PAPUA NEW GUINEA
Milne Bay
1000 km
130°
140°
150°
0°
10°

Basler Beiträge zu Ethnologie
Band 40

Nigel A. Stephenson

Kastom or Komuniti

A Study of Social Process and Change among the Wam People, East Sepik Province, Papua New Guinea

Ethnologisches Seminar der Universität
und Museum der Kulturen
In Kommission bei Wepf & Co. AG Verlag
Basel 2001

Herausgegeben vom Ethnologisches Seminar der Universität Basel, dem Museum der Kulturen und der Geographisch-Ethnologischen Gesellschaft Basel.

Redaktion: Prof. Dr. M. Schuster

Tauschsendungen an:
Museum der Kulturen, Augustinergasse 2, Postfach, CH-4001 Basel

Als Dissertation genehmigt von der Philosophisch-Historischen Fakultät der Universität Basel auf Antrag von Herrn Prof. Dr. M. Schuster und Frau Professor Dr. B. Hauser-Schäublin.

Basel, den 24.8.1993 Der Dekan: Prof. Dr. H. Isernhagen

Gedruckt mit der Unterstützung
des Dissertationsfonds der Universität Basel
des Max Geldner-Dissertationsfonds der Philosophisch-Historischen Fakultät der Universität Baseö
der Basler Studienstiftung
des Werenfels-Fonds der Freiwilligen Akademischen Gesellschaft Basel
des Museums der Kulturen Basel
der Geographisch-Ethnologischen Gesellschaft Basel

Cover: The cover picture shows the original facade of the Church of the Catholic Mission of Aresili. It shows the Holy Trinity based on the motif of traditional *Nggwal* figures from the Maprik area. Since the photograph was taken in 1984 the facade has been replaced.

CIP-Aufnahme der Deutschen Bibliothek
Nigel A. Stephenson
Kastom or Komuniti. A Study of Social Process and Change among the Wam People, East Sepik Province, Papua New Guinea.
Ethnologisches Seminar der Universität Basel und Museum der Kulturen, Basel.- Basel: Wepf, 2001 (Basler Beiträge zur Ethnologie; Bd. 40).Zugl.: Basel,Univ., Diss., 1993
ISBN: 3-85977-202-3
NE: GT

© 2001 Stiftung zur Förderung des Museums der Kulturen Basel, Augustinergasse 2, Postfach, CH-4001 Basel
Druck: Reinhardt Druck Basel
Alle Rechte, auch die der photomechanischen Wiedergabe, vorbehalten.

In memory of my father Dennis Q. Stephenson

Nigel A. Stephenson

Kastom or Komuniti

A Study of Social Process and Change among the Wam People, East Sepik Province, Papua New Guinea

CONTENTS

Acknowledgements v

Foreword: Outline of the study 1
The setting 1
Equality and autonomy 4
Contents of the study 12

Part I: The Social System

Introduction: An approach to the social system 17
Practice and the duality of structure 19
The codes of exchange 25
Code supplementation 31
On power 35

Section One: The Social Mould 38
Chapter 1: The physical realm of Warengeme 39
The village layout 39
Population 45
Chapter 2: On lineages, totems and names 51
Classification by *alamel piressi* 51
Classification by totems 57
The settlement history of Warengeme 60
The naming system 69
Chapter 3: On kinship and marriage 77
Relationship terminology 77
Forms of marriage 84
Chapter 4: Ritual organisation 94

Section Two: The Realm of Social Practice 103
Chapter 5: The hamlet and beyond 105
Chapter 6: The process of structure 116
Substance and Sustenance 116
Two case studies 121
The case studies in context 129
Deaths and funerals 138
Siblingship and beyond 146

Chapter 7: Ritual and competition 162
The tamberan cycle 162
The ascendancy of bigmen 175
Chapter 8: On sorcery 189

Part II: The Village in Change

Section Three: The Process of Change 203
Chapter 9: The forces of change 208
Political change 208
Economic change 211
Religious change 217
Educational change 219
Chapter 10: On land and people 223
Chapter 11: The erosion of formal exchange 234
The demise of the tamberan 234
The monetarization of marriage and funerals 239
The shift of power 247
Chapter 12: The funeral of Anisi 251
Chapter 13: Kastom and Komuniti 267
Chapter 14: The change movements and pervasive factionalism 278

Section Four: The Millenarian Movement 284
Chapter 15: The earlier millenarian movements: a synopsis 285
Chapter 16: The millenarian ideology 293
The myth of Gai and Apel 293
The millenarian world view 302
The NAC appeal 313
Chapter 17: The movement as a church 325
Church organization 326
The NAC liturgy 330
A NAC workshop 338
A short summary and analysis 345

Section Five: The Bisnis Movement 349
Chapter 18: The growth of collective enterprise 350
Chapter 19: The Tilli Bros enterprise 359
The layers of Tilli Bros 361
The aura of Tilli Bros 371
Chapter 20: Wotal Youth Group 376
The organization of Wotal Youth Group 376
Youth activities 384

Chapter 21: Pervasive Factionalism Revisited 393
Modernization and transformation 393
Anisi goes to town 398
Wotal's breakdown 409
The emergence of Miyeme Development Corporation 420
Chapter 22: Summary and conclusion 427

Bibliography 444

List of plates 459

Diagrams

1. Original, early and recent immigrant lineages in Warengeme 63
2. Descent reckoning in the *milmbe* (C) and *tineme* (D1, D2) lineages of Talkeneme 66
3. The transfer of the name Einde from line X to line V 72
4. Parallel and cross kin 78
5. Permutations of cross and parallel kin 83
6. Cross cousin sister exchange marriage 84
7. "Filling mother's hole" marriage 85
8. *Alnde erke* marriage 86
9. The ramifications of a FZ-marriage 88
10. Melange's marriage and its ramifications 122
11. Transfer of estate, names and ritual positions in Mahaite Ningaha's kindred 126
12. The Tillenge kin chart 252
13. Development of collective enterprise in Warengeme 353
14. Enmity and amity at the core of Tilli Bros 366
15. Wotal leadership structure 381

Tables

1. Population and hamlets in Warengeme 47
2. The Warengeme descent categories 56

3. Relationship terminology 79
4. The differential relationship terminology of the men of Enniki 91
5. The sequential order of the different tamberan stages 95
6. Past tamberan initiations in Warengeme 96
7. The *serengel pinandil* in the four wards of Warengeme 99
8. Youth group composition by age and sex 378

Maps

1. New Guinea Island Ins.cover
2. Sepik Provinces vi
3. Wam and neighbouring villages 2
4. The village of Warengeme 41

ACKNOWLEDGEMENTS

The writing up of a scientific study is, at times, a lonely business. It is only when one looks back over the months and years it took to complete that one comes to realise how many people were, or became, involved in the project and lent their support in some way or another.

To begin with I would like to thank the Swiss National Science Foundation for the funding of the two fieldwork periods in Papua New Guinea. During my time there I was affiliated to the Education Research Unit of the University of Papua New Guinea. Although it is a few years back, I am still very grateful to Sheldon Weeks not only for the scholarly support in his capacity as the director of the institute but also for his hospitality during my stays in Port Moresby.

My heartfelt gratitude goes to all the people of Warengeme, who not only accepted me in their village but also gave me the feeling, with no exception, of being welcome. Abraham Mahaite Ningaha, his wife Monika Haitewa and their children not only became my closest neighbours but also „my" family in Warengeme. Each in his or her own way not only taught me many things, it is through them that the hamlet of Enniki became my second home. Fieldwork is more than work in the field, it is a total experience in which the acquisition of knowledge and the growth of personal relationships and friendships go hand in hand. In lieu of many others I would especially like to express my gratitude to Bernhard Mahi, Anton Saasie and their families, Sam Numbia, Lukas Wolimbi, Francis Selmbia, Niamo Ergiangele, Hapeli Perite, Hiale Wabihei, Alex Anisi, Benjamin Tembule, Kani Happali, Gista Happali, Moses Tetineme, Lawrence Peimel, Michael Mahate, Papa Landime, and the late Wangu Wangu, Mahishu and Landihi: Tenk yu tru long olgeta halpim na long gutpela sindaun namel long yupela!

Father Waldemar Weniger (SVD) was a true companion and his endless optimism was always a source of inspiration. Many thanks also to the late Father Ferdinand Mittenbauer, and to Sister Jazintha and Sister Anne, then of CM Dreikikir, for their much appreciated hospitality.

Brigit Obrist van Eeuwijk has been a colleague and a close friend, both in the field and here at home, ever since our days as under-graduates at the University. I deeply appreciate her friendship. I am also indebted to Antje Denner and Rebekka Ehret for the many discussions we have had and for the assistance they have given me at different stages of the project. Carmen Ronco helped me through the difficult time of my father's death. I am very grateful to her for that.

I owe a great debt to my teacher Prof. Dr. Meinhard Schuster, not only for providing support and guidance in many ways but for awakening my interest in Papua New Guinea and Oceanic anthropology in the first place.

My deepest gratitude, however, is to my parents, Norma Stephenson and the late Dennis Stephenson, not only for their valuable contribution to the making of this study but, above all, for their interest in my work and for their unfailing love and support.

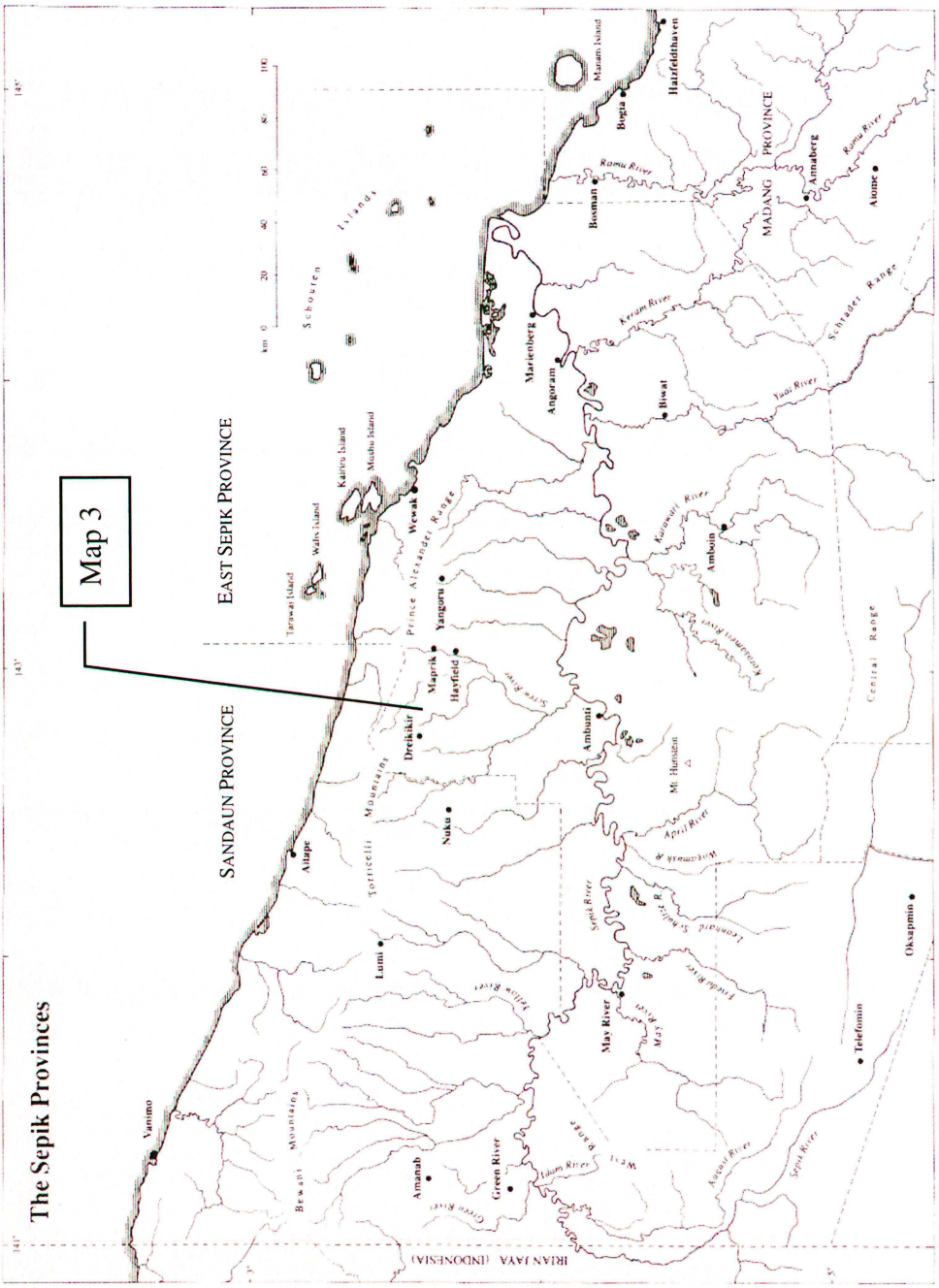

Map 2: The Sepik Provinces

FOREWORD

OUTLINE OF THE STUDY

This is an ethnography of the Wam people in the East Sepik Province of Papua New Guinea (cf. map 1, inside cover). More specifically, it is intended as a narrative about the village of Warengeme in a time of pervasive economic, social, and cultural change. The Wam live in the Dreikikir Subdistrict. Their area lies approximately in the middle between the two administrative centres of Maprik and Dreikikir, on the southern slopes of the Torricelli Mountains (cf. map 2, opposite). They inhabit eight villages of varying size. Warengeme with 650 inhabitants is the largest, Bengil and Tumambe with 100 to 150 persons are the smallest. Selnau, Aresili, Selni, Bana, and Hambini are of intermediate size. Together they number something over 2500 people. The majority of the Wam villages lie wedged in between the Nanu in the south and the Amuk in the north, the two largest rivers in the area (cf. map 3, p. 2). They both join the Screw River later and flow into the Sepik River near Avatip. Only the villages of Selnau and Hambini lie beyond the Amuk to the north.

THE SETTING

Politically, the Wam villages belong to the Dreikikir Local Government Council but, in general, the people are more oriented towards Maprik, it being the larger and commercially more influential centre. The Sepik Highway runs south of the Wam area, coming from Wewak, Yangoru and Maprik, leading to Dreikikir, and on to Nuku and Lumi in the Sandaun Province. The Wam villages are linked to the highway by a vehicle track, which runs from Balif to the Aresili Catholic Mission Station and Community School, which, despite the name, stand on Warengeme land. The more peripheral villages such as Selnau, Bengil, Tumambe, and Aresili itself used to be joined to the road system in earlier years but at present, and due to lack of maintenance, these road sections are now closed, and gradually the bush is reclaiming the ground.

The topography of the area is characterized by an intricate system of streams, narrow ridges, and hills with very steep slopes. The whole area is covered by dense secondary-growth forest. The Wam are horticulturalists practising a system of shifting cultivation. Yam, taro, sweet potatoes, and bananas are the staple crops, which are supplemented by sago, at times, and a variety of vegetables and fruits. The Wam can be described as belonging to the yam culture complex spreading along the southern foothills of the Torricelli and Prince Alexander Mountains, which includes peoples like the Abelam (see e.g. Kaberry 1940/41; Lea 1964, 1965; Hauser-Schäublin 1987, 1989; Huber-Greub 1988; Scaglion 1981), various Arapesh groups (see e.g. Gerstner 1939; Mead 1938, 1947; Tuzin 1976, 1980, 1988, 1997; Leavitt 1989, 1995a, 1995b), the Urat (Allen 1976), the Gawanga (Obrist 1992; Brison 1992), and a number of others in the wider area. In all these cultures, the cultural significance of yam extends far beyond its value as a dietary source. It figures as a pivot in terms of belief orientation, ritual, and ceremony. Pigs are kept for ceremonial and more secular exchange purposes. They rank as prime value objects. In earlier times,

hunting used to play an important part in the men's life but now there is little left to hunt. Today, cash cropping plays a central role in the economy. Coffee is grown extensively and recently cacao has been introduced to the area.

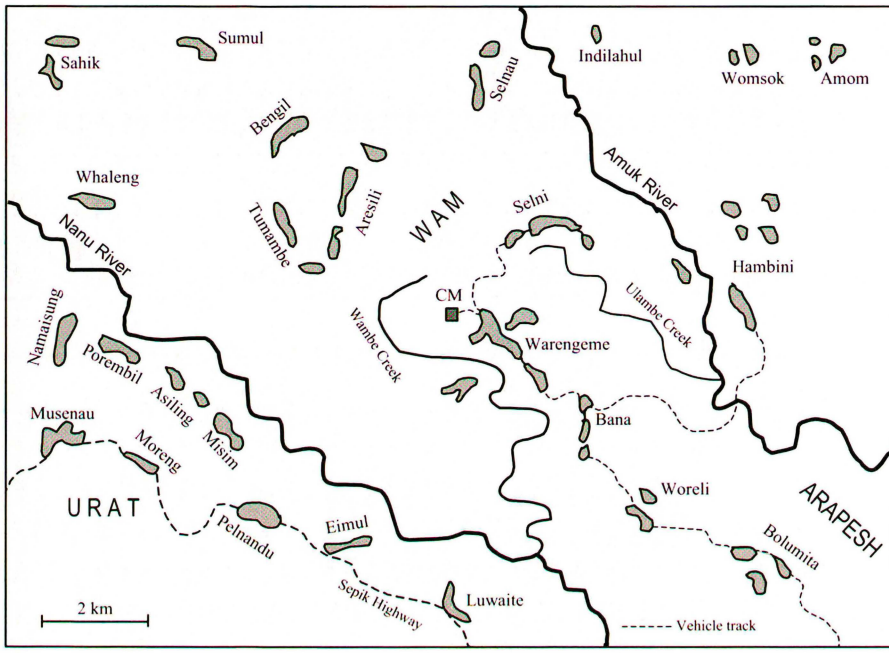

Map 3: Wam and neighbouring villages

The Wam form a distinct linguistic group. They belong to the Kombio Family of the Torricelli Phylum (Laycock 1973:13). To the north they border onto the Mountain Arapesh (Mead 1938) or, as Nekitel (1985:1) prefers to call them, the Abu Arapesh. To the east and south are other Arapesh groups, which Laycock (1973:14-15) divides into two languages: the Southern and the Bumbita Arapesh. The Wam themselves distinguish between three groups: the Muhiang, the Ilahita, and the Bumbita Arapesh[1]. Nekitel (ibid.), himself a native Abu speaker, classifies the different Arapesh groups altogether slightly different. To the south-west and west lies the territory of the Urat (Laycock 1973:11; Allen 1976:27), and to the north-west are the Kombio and Yambes (Laycock 1973:13). The Wam themselves classify rather differently. They subsume the Urat, Yambes, and Gawanga (further to the south-west, south of Dreikikir) under the same language which they call *Ura*, whilst the Kombio are seen as speaking *Ningerahua*. A closer look at the more restricted study area displays an even more complex picture, since on the periphery of the Wam language area there is a considerable degree of linguistic overlap and bilingualism. Thus, in the south-west, the two villages of Luwaite and Eimul rank as half Wam, half Urat settlements. The villagers speak of Luwaite as being a Wam-Urat village which has Wam as its primary and Urat as its secondary language, whilst in the case of Eimul,

described as being Urat-Wam, it is the other way round. Both villages have close social and ritual ties to the Wam proper. In the north-west, the villages of Sumul, Sahik, and Whaleng, which Laycock (ibid.) classifies as Yambes speakers, the Wam place in the same tok ples (Tok Pisin for language)[2] as the Aruek speakers of Mehet and Labuain and call their language *Selepe*. They often refer to these villages as the "last Wam" (before one comes to the Kombio) in recognition of a certain degree of cultural affinity, but they admit that they have great difficulties in understanding their speech. Leaving the Wam area to the south-east, the first village past Bana is Woreli. Laycock (ibid.) classifies it as a Southern Arapesh village but a wordlist check revealed it more likely to be a linguistic isolate. This was confirmed by Wam people and Woreli speakers, who maintained that they had a language of their own beside being versed in both Wam and Muhiang.

The Wam call their own language *Miye*, and designate themselves as the *Miyeme*. They distinguish between two dialect groups, which they term as Wam 1 and Wam 2. Wam 2 comprises the lower villages of Bana, Warengeme, Hambini, Selni, and, at times, Luwaite; Wam 1 includes the upper settlements of Aresili, Bengil, Tumambe, and Selnau. In earlier days the two groups regarded each other as enemies but the history of past warfare (of which there was not much) shows that the boundary of enmity and allegiance often crosscut this division. Besides constituting a linguistic entity, the Wam can be described as forming a cultural group. This becomes evident in such issues as the system of kinship, which displays significant differences to those of surrounding groups. However, at the same time, it must be noted that the Wam share many cultural properties with their various neighbours, notably in the field of belief and ceremony. The secret male cult, the tamberan, called *sulu* in Wam, is a central feature of all the societies belonging to the yam culture complex in the region. Although the different cultures display many divergences in the way the tamberan is conceptually structured and enacted, all the variations hinge on a common basic theme. At all times, the transfer of cultural properties and ideas between the various groups appears to have been quite high, which is partly due to the migration movements in the wider area over the last few hundred years (cf. Tuzin 1976:72). More significant in this respect, I believe, was the fact that local communities never did restrict their social, economic, and ceremonial dealings to like groupings of the same language area; instead, interaction took them well beyond their linguistic boundaries. Warengeme, for instance, not only harboured a considerable number of originally immigrant groups, the villagers also maintained trade and ritual relations with villages as far away as the coast to the north, Ilahita in the south, or the Gawanga villages in the south-west. Trade contacts, marital unions and ritual ties thus promoted the flow of, and paved the way for, the transfer of cultural properties, which were then adapted and built into the indigenous cultural design.

No anthropological research had been done in the Wam area prior to my own. In the early 1960s the area was visited several times by Parkinson, then the medical doctor based in Maprik (cf. Schofield and Parkinson 1963) and Robert MacLennan, he too a doctor from Maprik, who recorded traditional music from the area. It appears that at some time in the early seventies a short feasibility study was carried out by two linguists of the Summer

Institute of Linguistics. A major and very valuable study of the wider Dreikikir area was conducted by Bryant Allen (1976), a social geographer from Canberra, who studied the development of cash cropping and millenarian movements in the area. The Wam area is included in his study and his research has proved a valuable source of information. Earlier publications on the Wam include Stephenson (1987, 1988, 1994, 1995, 1998).

The first time I heard of the Wam people was in 1980, whilst I was staying in the Gawanga village of Tauhundor (cf. Obrist 1992). Tellingly, it was in the context of sorcery. The Tau people tried to convince me of the heinousness and evil nature of the Wam people, but to no avail. I returned to the Dreikikir area in April 1984 and, after a brief stay at the Aresili Catholic Mission Station, I decided to conduct fieldwork among the Wam. Admittedly, they do have a reputation as sorcerers, and sorcery is a central theme in Wam culture but the Wam people are anything but heinous and wicked. I got to know them as a friendly and warmhearted people. I conducted research among the Wam for approximately 18 months in the village of Warengeme. After spending twelve months there from October 1984 to October 1985, I returned to Warengeme for a second turn of fieldwork in October 1987 and stayed until May 1988. The last visit to the area was in 1996. During my stay, I lived in one of the central hamlets on the borderline between the two village halves.

EQUALITY AND AUTONOMY

Within Melanesian anthropology there has been long an interest in the relationship between equality and hierarchy, and the development of inequality in social systems (M.Allen 1984; Flanagan 1988, Godelier 1986; Josephides 1985; Kelly 1993; Ledermann 1986; McDowell 1990a; A.Strathern 1982). Sepik ethnographers have contributed to this research (cf. B.Allen 1990; Errington and Gewertz 1987; Harrison 1985a, 1985b; Losche 1990; Lutkehaus 1985; Mitchell 1978). This renewed interest in the question of equality/inequality derives to a substantial part from anthropology's fruitful occupation with the issue of gender, the study of male-female relations, and sexual stratification (Ortner and Whitehead 1981; Schlegel 1977; M.Strathern 1987). It is also a subject in the issue of how the post-colonial state deals with its citizens in a time of uprecedented economic growth and exploitation and the concurrent proliferation of violence (cf. May and Spriggs 1990; Seib 1994; Standish 1992; A.Strathern 1995; Stephenson 1995).

In the present study I do not explicitly, or in detail, address the question of inter-gender equality/inequality. My perspective is very much restricted to the intra-gender view, that is the issue of equality and hierarchy between men. This does not mean that women are excluded from the study as social actresses but, being male myself, and since I worked almost exclusively with male informants and in ostensibly male dominated forums, the study, admittedly, has a male bias. In strict terms I would have to say that the following is an ethnography of male Wam society.

Needless to say, the term equality is a vexing concept and has occupied the human sciences for a long time. In anthropology, various scholars have given definitions of the concept. Fortes and Evans-Pritchard coined the term for societies which lack centralized

authority and in which there are "no sharp divisions of rank, status, and wealth" (1940:5), or where "the distinctions of rank and status are of minor significance" (ibid:9). Fried (1967:33,52) distinguished egalitarian and hierarchical systems on the basis of the availability of status positions. In egalitarian societies, according to Fried, there are as many status positions available as there are individuals to fill them. For the Melanesian area Marilyn Strathern writes: "The peoples of this region are characterisable as 'egalitarian' in world terms: horticulturalists, whose local organisations are small scale, and whose cultural efflorescence is to be found in institutions based on wealth exchange and life cycle events. Big men and institutionalised ranking flourish to a lesser or greater degree, but nowhere is property ownership in land or the alienability of labour a systematic basis for social discrimination between men" (M.Strathern 1987:2).

Sahlins stated that truly egalitarian societies simply did not exist: "Theoretically, an egalitarian society would be one in which every individual is of equal status, a society in which no one outranks anyone. But even the most primitive societies could not be described as egalitarian in this sense" (Sahlins 1958:1). The universally employed minimal stratification criteria are those of age, sex and personal characteristics. Sahlins goes on to suggest that we reserve the term stratified for societies that employ criteria beyond the three listed above. By relaxing the criteria in the way Sahlins suggests we can safely define the Wam as being an egalitarian society along with many other similar societies in Papua New Guinea. But, as Flanagan notes (1989:247), the blanket characterization of a wide variety of non-Western societies as "egalitarian" has come under increasing scrutiny recently. Apart from the question of gender, the view has proved inadequate to deal with the changing circumstances in such societies, called forth through contact with Western culture and colonialism, and the newly emergent properties of their social order. But it also ignores the possibly inherent tensions within these societies, and the fact that equality is not necessarily a value or a right which members of a society grant each other freely. Inequalities in terms of status, influence, or power between persons – not only between men and women, or old and young – is a trait which also exists in egalitarian societies without these having to be divided into institutionalized and ranked categories or persons, in which case we would be dealing with social stratification (Berreman 1978:226). Following Dumont (1970), I shall apply the term hierarchy to describe the inequality between persons in general, and more specifically between men, and the differences between them in terms of status, influence, and power.

One way of approaching the problem involves making the distinction between equality of opportunity and equality of outcome (Flanagan 1988:166). Under conditions of equality of opportunity, individuals, i.e. men, are equipped basically with the same opportunities in terms of access to basic economic resources, mainly land, and have equal access to cultural institutions through which social positions, prestige and status are acquired, mediated and expressed. Among the Wam these relate to the systems of kinship, lineage, marriage, and naming, and their modes of production and reproduction, but, imperatively, also to the ceremonial system and the secret male cult, the tamberan, through which status

differentiation is made explicit and cultural meaning mediated, and through which, in the end, maleness is expressed.

In the long run, the social balance in Wam society is maintained because economic and cultural resources are approximately evenly distributed across society, because status and power is restricted to the individual and is not vested in particular groups, or categories, of people that transcend time, and because the individual himself is subject to the lapse of time and passes through various stages of a life cycle. The Wam bigmen of the 1960s today, if still alive, are wrinkled old men, banished to the doors of their huts, who may enjoy a certain degree of reputation and radiate a discrete form of pride and sophistication, but who command little or no authority over their descendants of different age groups. In this overall sense and viewed from the aspect of a system over time, the Wam are equal in terms of both outcome and opportunity.

If one, however, takes the short-term view and looks at Wam society over a distinctly shorter time – a snapshot view of Wam society so to speak – such as the period of a fieldwork or several visits to the field over a number of years, one would come across an imbalance in society and find that certain individuals are more equal than others, and have acquired a position which allows them to exert influence over others, and that there are distinct differences in terms of status and power. One would also find that individual status positions are highly contested, and more specifically, that no one could be found who would admit to being subordinate, let alone inferior, to anyone else. But it would also be hard to find someone who, excluding certain significant occasions, would assert that he was superordinate to the fellow members of his society.

This brings us to the next differentiation. This involves the necessary distinction in relation to what dimensions we are referring to when talking about social equality. Are we making reference to an egalitarian ideology or to egalitarian practices. The proposition that the Wam represent an egalitarian society is neither incorrect nor unwarranted but merely inadequate. Equality or egalitarianism is multilayered in meaning, and needs to be "culturally and contextually defined" (Flanagan 1989:247). As Flanagan suggests, we first need to differentiate between cases where equality is applied as an ideology and where egalitarian practices prevail. Cohen (1985:33) goes a step further and maintains that one must distinguish between equality as an ideology (we should all be equal here), as rhetoric (we are all equal here), and as pragmatism (we behave as if we are all equal here). One could also include a further aspect, which could be termed subjective assessment, which one could then paraphrase as "no one is more equal than I", or which, at times, can be inverted to "I am more equal than others".

Given that, following Sahlins, no society is absolutely egalitarian, and that in Melanesian societies status is normally not ascribed but achieved, and, furthermore, that there exist culturally specific and defined modes and channels for achieving status, it will become evident that every society "generates multitudinous means of making evaluative distinctions among its members, means of differentiating among them," and that "frequently, the appearance of egalitarianism conceals the reality of differentiation" (Cohen 1985:34).

Egalitarianism and inequality appear antithetical and would suggest that the two dispositions cannot coexist in the same social environment. This, however, need not be so. As Lutkehaus (1990:181) comments, "the problem with regard to any society is not to identify it as either 'egalitarian' or 'hierarchic', but rather, to determine the relationship between the two principles and the role they play in organizing social relations and structuring domains of social life. Depending on the context, one principle will be dominant, the other muted. It then becomes a matter of understanding the different cultural 'weight' given to one principle rather than the other in different social contexts and the effect this weighting has on social structure, behaviour and a culture's world view or ethos."

In this study, the interplay between the two principles 'equality' and 'hierarchy' in various contexts and manifestations is one of the central *leitmotifs*. The Wam themselves display in different ways that they view their society as an egalitarian one. There exists a strong ethos of equality. But, at the same time, competition between individuals is an equally manifest trait. Equivalence, in the end, is gained not because the Wam freely grant each other equal status, but because, firstly, the access to, and distribution of, basic resources does not permit developments that would lead to stratification, and, secondly, because the sociocultural system is encoded in such a way that a balance is maintained. The modes and channels through which status is achieved and hierarchy is created are the same as those through which equivalence and cohesion are attained: exchange and reciprocity. The fact that the Wam can be described as egalitarian does not rule out the fact that they seriously try to create inequality.

Another way of coming to terms with the way the Wam handle the two apparently contradictory principles is by applying the concept of back and front stages, or regions, in society. The idea goes back to Goffman (1959) and his study of how people present themselves to the world, and how social interaction is organized and handled in everyday life. Amongst others, Giddens (1979) has adopted this idea and it flows into his own social theoretical approach (cf. also Karp 1986). Goffman limited his observation to Western culture mostly, but I believe the concept is applicable to societies such as the Wam as well.

Generally, the distinction between back and front regions in social interaction refers to the way people use differential modes of judging, evaluating, and talking about situations, events, or relationships, depending upon the setting in which such reflection and action take place. Actors often think and act differently in different situations, moreover, they frequently think one way in a specific setting but act or talk differently in another. As Giddens (1979:208) remarks: "Performances in front regions typically involve efforts to create and sustain the appearance of conformity to normative standards to which the actors in question may be indifferent, or even positively hostile, when meeting in the back." In front regions, a person's words or actions acquire a different moment or significance in the sense that his performance is observed, recorded and evaluated by third parties, with the consequence that the actor is made accountable for his acts. He gives accounts of things, either in words or other forms of signification, but he also has to account *for* the way he behaves, or for what he says. In back regions, on the other hand, a person can judge,

evaluate, express his opinion, and act, without necessarily having to justify his words or actions in front of others, although these others are present.

The idea of the regionality of social interaction is a spatial metaphor. The locality in which action takes place, or where words are spoken, is often a significant criterion. But it is not necessarily the critical variable. A person can be in the same locale on two separate occasions and act or speak in a completely different manner. An employee most likely will express his opinion on a delicate subject differently, depending on whether the employer is present or not. The factors that define whether one is speaking or acting in a front or a back region depend on the composition of the group present and, more importantly, on the definition of the event, that is the setting in which action or speech take place, and how that setting is culturally evaluated.

The mode in which the Wam perceive and deal with this dichotomy between inequality or hierarchy and equality fits into the distinction between front and back regions in society. On stage, the Wam display an ethos of equality, where all men are granted equal status and act as if they were all equivalent, well knowing however that this does not necessarily reflect the actual pattern of relations, nor does it pertain to the way in which each individual evaluates the pattern of relationships for himself. In the back region the hallmark of relations and their evaluation is competition. But this competition only rarely becomes manifest and is made explicit. Competition does not mean incessant contestation of status positions, conflict, quarrelling or fighting, moreover it refers to a permeating, but latent, attitude that prevails towards the nature of relationships between the individuals of Wam society.

Equivalence is the outcome of pervasive competition, but it is also the medium in which, on the surface, members of society rationalize and talk about their relations, and it is also the state of their existence they envisage. The most apt and concise way of defining the ethos of Wam society in effect is to describe it as one of *competitive equality* (cf. Woodburn 1982). It contains both elements, competition and equivalence.

The distinction between front and back regions in society also goes beyond that of ideology and practice because it contains the crucial element of discourse, of speech and language in action. In discourse, frequently, ideological points of view are expressed and discussed, but speech and words do not merely reflect and make propositions about views on certain matters, how they are ordered, or how things should be. Discourse creates the linkage and mediates between ideas about things and practice. It brings practice into focus with ideology and, often, rhetoric is the instrument through which ideology and practice are brought to blend with each other. Action is justified in terms of ideology or, just as often, ideology is interpreted to fit action. Speech and language do not merely reflect properties of the "social universe" (Sillitoe 1979:28-30) they must be seen and treated as constitutive activities of the social order (Brenneis and Myers 1984:2). In and through language, people not only grasp the order and make statements about the world they live in, they actually contribute to the shaping of this universe, and the relations between the elements that make up this universe.

In close conjunction with the theme of equality/hierarchy stands a second theme. This is the issue of the autonomy of the individual in relation to his membership in an incorporating social order. Whilst dogmatic structural-functionalism focused heavily on the constitution and working order of the social group and at the cost of the individual[3], and orthodox structuralism was occupied with the search for and identification of underlying principles and abstract models, some of the more recent anthropological research has shifted its focus to the question of autonomy and incorporation and to how the individual finds a solution to the apparent contradiction of being an autonomous person and a member of a social group at the same time (cf. Briggs 1970, Lee 1979, Myers 1979, Rosaldo 1980, McDowell 1990b). The critical issue becomes one of identifying a principle which accounts for both these aspects. It is best provisioned for by the principle of exchange in the broadest sense of the term. "The act of exchange has within it two opposed features which make it eminently suitable for the resolution of the social strain generated by these opposed interests. It encourages sociability because men must act considerately with one another to engender co-operation necessary for the two-sided transaction. And it allows for competition between men in what they give and receive, and this is an outlet for their ... urge to secure the best for themselves as individuals" (Sillitoe 1978:10).

The Wam place the greatest value on the autonomy of the individual, by which I mean, following Beteille (1986:122), that they hold the individual to be as important as, if not even more important than, any form of collective, be it lineage, moiety, or ward. This does not mean that the Wam live as isolated subjects next to each other. On the contrary, they are enmeshed in dense networks of relations of various orders. The critical point here is that autonomy means the individual's capacity to choose which relations he regards as meaningful, which ones he wishes to sustain or extend, and which ones he believes he has the capacity to curtail (Myers 1986:431). The central social task a Wam faces is gaining autonomy through relations to others and, at the same time, bringing relations into a compatible form with the theme of equality. A person is confronted with the task of organizing and mediating between his (or her) personal ambitions, preferences and interests, and the interests of others, as well as the constraints the social setting places upon him, by applying the cultural modalities his society offers to accomplish the task. There is no centralized institution or authority to which he can delegate the task of organizing his social existence and regulating his relationships and interaction, just as, and this is the other side of the coin, there is no centralized authority which determines and dictates the terms of social life for him. Within the range of opportunities and constraints the cultural system offers, the individual operates on his own.

As I hope to show later on, the fabric of the social system is made up of an immeasurable multitude of dyadic relationships, the nodes of which are occupied by consciously acting individuals, each one of which possesses substantial knowledge "about the conditions of reproduction of the society of which he or she is a member" (Giddens 1979:4). Each individual represents the hub of a complex network of social relations which include various categories of people who act and perform in accordance with the terms offered by the relationship and the setting within which interaction takes place. Within

limits, it is left to the individual to organize, manage and give meaning to the relationships, drawing upon the rules, resources, values, and modes of expression Wam culture furnishes him with. One of the purposes of the first part of the study which deals with the social system, is to show how the autonomy of the individual is the product of the recursiveness of social practices and how it is both the medium and outcome of events of formal exchange.

The Wam display a high propensity not to become openly involved in the affairs of others even, or more precisely, especially not, those of lineage mates or other close kin. Correspondingly, they react with irritation when others intrude in their own sphere. Preferences and decisions of others are accepted as such, even when pending action promises to be counterproductive, or even damaging, to the person concerned. There is no higher lineage or other type of authority to intervene, although elders, usually matrilateral kinsmen, or other close kin, might attempt to mediate and exert influence. Also, there is very little leverage to coerce someone into doing something, even in relationships which do contain the element of authority, such as between fathers and sons. Nor do individuals feel obliged to show respect to, or act in accordance with, any form of superordinate, collective authority. Lineages do exist, but they do not operate as corporate groups. Duties are owed to, and obligations felt towards, other individuals to whom one has meaningful relations.

In the flow of everyday life, this type of individualism becomes manifest in various ways. It is reflected in the settlement pattern and the people's preference for living in small hamlets with only a few other families. Among adults, the range of mobility within the village is restricted and regulated by routine. Each person has his small circle of close kin, associates, and friends he visits regularly but otherwise life is very much centered on his family and hamlet and, during the day, on his garden. Many people in the village do not see each other for weeks, or months, on end and, in the case of older people, sometimes even years. To a certain extent, this has changed over the last few decades through the establishment of modern institutions, such as the churches, which bring the villagers together regularly. Still, I believe it is significant that I got lost within the village area twice during fieldwork – be it noted, on both occasions in the company of an adult villager of Warengeme.

All in all, one could say that social practice among the Wam is characterized by a form of official discretion and reserve. People see, hear, and register everything that is going on in their surroundings and, backstage, it is feverishly commented on, and gossiped about, by both men and women; but frontstage the affairs of others are ignored and not referred to, unless of course they in some way affect one's own sphere of influence. Such an intrusion elicits a response which, if serious, can lead to conflict.

This form of discretion stands in stark contrast to an attitude the Wam display equally often and which one could call blatant self-assertion. By this I mean the manifest tendency to explicitly express and emphasize one's own role and performance in either giving account of a past event, or in reference to one's own potentialities. This disposition I gradually, for myself, came to term "mitasolism", and will continue to do so here. The

term stems from the Tok Pisin words of mi and tasol which mean in conjunction "I alone", or "only I". "Mitasolism" is not applied by everyone in all situations, but the majority (of men) revert to it on some occasion or another. But it is mainly the prerogative of the men of status, and, more significantly, of the younger men in the quest of status attainment, and in the process of building up their spheres of influence. Self-assertion is not only an expression of already achieved status, it is an essential means of attaining it in the first place. Performance in public is not merely a reflection of the existing relations of power and influence, but actually a constitutive means in the production of the social order. Whether a contender succeeds in this quest or not depends, amongst other things, whether he can, in the long run, substantiate his words with deeds, that is, factually achieve something, thus shaping the course of events, and not only talk about it. Mere talkers soon loose credibility and fall back in the race.

The inception of the colonial order introduced the aspect of a new relativity of cultural awareness in the sense that the Wam, and others like them, were compelled to adjust their view of the "social universe" to include hitherto unknown, or at least only rumoured, worlds. This refers in the main to the world of Western culture and power with which they came into contact in the form of its typical representatives, i.e. missionaries, labour recruiters, patrol officers or plantation owners, but it also pertains to the members other peoples and cultures of Papua New Guinea of whom they no longer only heard through hearsay but which they, i.e. specifically Wam men, encountered during their stay in the coastal regions and on the islands of New Guinea as migrant labourers. In the roughly fifty years of colonial experience, the Wam not only gained growing insight into the working order of the colonial system from their own cultural viewpoint, with the proliferation of Christianity, of literacy, of political education and of the knowledge of capitalist business practices, the Wam increasingly began to scrutinize and reflect on their own society and culture, now through a gradually acquired, and at times twisted, Western perspective.

This kind of reflection covered, and still covers, all fields of life but it gains special significance in the sphere of politics, where the issues of autonomy, status and equality rank primarily. The Wam have become absorbed in a wider national and now even globalized system and the altered context has given rise to an altered perception of, and approach to, equality and autonomy. No longer is it only a matter of keeping equal with one's neighbour and retaining a certain degree of autonomy towards one's kinfolk, the perspective of the individual has been supplemented with a collective dimension. In regional affairs it is the village, more precisely the council-area of Warengeme, that has to hold its own and make it's voice heard if it does not want to fall behind; in provincial politics the Wam have to stand together, and up to the Urat villages with which they together form a constituency. Where the state as such is concerned, there is a strong but diffuse notion that the people of the rural areas in general have a stake in common to ward off the attempts of exploitation by the political, mainly urban elite that is accused of only being intent on securing its basis of power and wealth and suspected of being in league with large, multi-national companies. Nevertheless, the outside, wider world of which the great majority of villagers have seen little to nothing and which exists mainly in stories and

images, stands for modernity and development and embodies the goal the people are aiming for, a goal that they feel they are morally justified in attaining. The spatial dimension of "inside" and "outside", "us" and "them" blends with a temporal metaphor of "past" and "present", "traditional" and "modern" thus creating a complex perceptory framework within which the social and cultural process is perceived, interpreted, commented and judged on. This ongoing process is sustained by the notions of the traditional and feeds on the visions of modernity and development. In the interplay between the rhetorics of change and the resilience of social practices, and between expectations, hopes and apprehensions and concerns is lodged the dynamic that is shaping village life at present. This study attempts to explore this dynamic.

CONTENTS OF THE STUDY

The study is divided into two parts. These, in turn, are divided into sections, chapters, and, on occasion, subchapters. Equality and inequality, or hierarchy, constitute leitmotifs throughout the thesis. The two parts deal with different aspects of Wam culture and society through the various stages of time, and with the different shades and variations in which equality and inequality become manifest. At times the leitmotifs emerge more explicitly, at others they are addressed more implicitly and find expression in such issues as the composition of action groups, the notion of siblingship and agnatic conflict, or the contrasts between ideology and practice.

In part one I deal with the traditional social system of the Wam. The recount is based on observations of, and discussions on, practices in social life and it includes the reconstruction of past social patterns, especially where the ritual system is concerned. This first part of the treatise serves two ends. Firstly, it is an exercise in itself, a detailed description and an at least partial analysis of the Wam social system; secondly, it serves as a background for the second part. Many themes addressed in this first part reappear in the latter parts of the thesis. One of the main themes concerns the maintenance of the balance of equality and hierarchy between the agents involved in the recursiveness of social life through the application of differential codes of interaction. It begins with an outline of the social system, where I present my methodological approach to the social system and stake out the basic issues I shall be dealing with in more detail.

In the second part of the thesis I deal with present village society. Colonialism, which I characterize as an encapsulating system, not only opened many new dimensions of cultural experience to the people it also introduced a new sphere to the issue of equality and inequality. The Wam suddenly found themselves confronted with a social and cultural system which showed itself to be vastly superior to their own and, in addition, refused to accept the villagers on an equal basis. Attaining parity with the encapsulating system – at first with the colonial order, later with the post-colonial establishment – and becoming integrated as equal partners in the system became the new aim of Wam society over the years. This aim triggered off two processes which run simultaneously and which I call modernization and transformation. By the former I understand the taking over of a wide range of modern, i.e. Western-styled, political, social, economic, and cultural institutions

which the Wam believe, and hope, will allow them to reach their goal; the latter refers to a change of their existing social form by the discarding of traditional principles of social production and reproduction and by the adoption of a "modern" societal design. In the opening section of part two I deal with the process of social change in more detail. I discuss the forces of change and what effects they are having on the working order of the social system.

Modernization and transformation are ongoing processes and they have led to an ambiguous perception of society which is best expressed by the two, antithetical, concepts of kastom (engl. custom) and komuniti (community). I treat the two concepts at length in chapter 14. Kastom denotes the past, the traditional culture, and the old social form. In contrast to many other Melanesian cultures of the present it has strong negative connotations because it is associated with contention, conflict, sorcery and hierarchy. Komuniti, on the other hand, designates the future, cooperation, harmony and equality, and is thus positively connoted. At present, the Wam find themselves hanging between the two poles. They are consciously discarding their traditional culture, kastom, and moving towards a state of komuniti, which, however, they have not attained yet. The road to komuniti is strewn with obstacles and pitfalls which, be it noted, the Wam believe they themselves are placing in their way. They are obstructing their own path to change because under the gloss of modernity and development the people are still clinging to the habits of kastom: In the main, this means they are not cooperating with each other; instead, they are still competing against each other for power and pre-eminence. The prevalence of sorcery is clear evidence of this.

Change is often viewed under the aspect of the curtailment or even rejection of the traditional culture and the (forced) adoption of social, cultural, economic properties of the dominating system by the encapsulated group. Here, one is likely to overlook that the subordinate society does not necessarily represent a unified and harmonious entity, collectively striving for a common aim. Very often one finds that the degree of consensus is low and the prevalence of conflict high, with the result that the means and resources provided by the encapsulating system are exploited by the society's members and used to further their own ends and interests within the group. Thus, whilst the Wam as a whole are on the quest to attain parity with the encapsulating world, certain individuals, notably the bigmen and those striving for bigmanship, display the tendency to tap the opportunities which the dominating system provides in order to create hierarchy within their own society. These opportunities refer to political offices created by the colonial and post-colonial order, new economic opportunities, and also positions introduced by the different churches and missions.

The colonial and post-colonial experience revealed that, try as they may, neither the Europeans before nor the present Papua New Guinea elite (best captured in the image of the modern politician and the urbanized businessman) were, and are, prepared to grant the Wam equal status. The villagers would have to fight for it in a long struggle. The last decades have seen the emergence of a number of broad social movements in the country in general, and in the Wam area in specific (cf. May 1982a). I generically call these "change

movements"; firstly because they are a product of change, and secondly because change is what they are aiming for. One can make a distinction between two types of change movements. The first refers to the politico-religious type – what is often designated as a cargo cult – the second is more politico-economically oriented and today comes in the form of bisnis[4] groups, youth groups and other village-based development associations. Like other villages in the Dreikikir area (cf. Allen 1976), Warengeme has a long and colourful history of change movements. At present, there are two such movements active in the village. I have termed them the millenarian movement and the Bisnis movement respectively. The millenarian movement comes in the form of the New Apostolic Church (NAC), the Bisnis movement consists of a number of interrelated economic collective enterprises. Basically, the two movements are following the same aims, i.e. they are working towards komuniti, but they radically differ in terms of organizational form, fields of activity, and the means of achieving their aims. Whereas the millenarian movement displays a utopian discourse, the Bisnis movement shows a pragmatic orientation.

Significantly, the two movements also differ in relation to membership. Whereas the NAC almost entirely recruits its members from the upper two wards of the village, Wohimbil and Warengeme, the Bisnis movement has its stronghold in the lower two wards of Wolhete and Talkeneme. This we can take as an indication that the two movements are not only following explicit aims, i.e. attaining komuniti, but also serve implicit ends. Indeed, the two movements also constitute political factions, through which the various village segments are competing for influence and ascendancy in Warengeme. I treat factionalism in fuller detail in chapter 15.

The millenarian movement in the guise of the New Apostolic Church is a protest movement which strongly resents the present political order in the village and its representatives, based on the conviction that these modern bigmen are misusing their a[5]uthority in order to create inequality in the village and subjugate its people. The movement's cohesive strength rests on a convincing millenarian ideology which foretells the impending arrival of the millennium and the forthcoming establishment of truly equal relations, between the village and the external world on the one hand and within the village itself on the other.

The Bisnis movement is a more pragmatically oriented association but it too is aiming for the ultimate goal of komuniti. It is headed by a small group of young, educated, and highly ambitious men. Its two main protagonists returned to the village during my first fieldwork period after having spent several years away from home during which they were employed in the modern economic sector. They returned to Warengeme with the explicit aim of bringing fundamental changes to the village in the form of new development projects and novel organizational forms, in order to accelerate the processes of modernization and transformation. However, the implicit aims, especially on the part of one of the actors – a man called Alex Anisi – were to establish themselves as the coming men of influence in the village and challenge the present leaders. The Bisnis movement served as their political support group whilst, at the same time, it provided a convenient forum in which they could assert and prove themselves, showing the village that they

commanded the strength, the knowledge and the aura to be the coming bigmen. Sections four and five in the second part of the treatise deal with the millenarian and Bisnis movements respectively in fuller detail.

NOTES:

[1] Today the Wam use the terms Muhiang, Ilahita, and Bumbita to distinguish between the three groups. The Muhiang and the Ilahita are said to speak the same language, called *Embi* in Wam, but are perceived as being culturally slightly different from each other. The Bumbita language is called *Wori* in Wam.

[2] Throughout the thesis the Tok Pisin terms are underlined, whilst the indigenous Wam terms are *italicized.*

[3] Malinowski made the point of assigning to the individual primary importance in his group. Sillitoe (1978: 9) comments: "Malinowski made a similar point many years ago, and his pronouncement that a society exists because it benefits the individuals who make it up is Melanesian philosophy pure and simple, and indicates that to understand their way of life it is necessary to keep the individual in view."

[4] Bisnis, from engl. business, denotes any form of earning money. Bisnis groups are village-based collective enterprises.

PART ONE:
THE SOCIAL SYSTEM

INTRODUCTION
AN APPROACH TO THE SOCIAL SYSTEM

Over the last four decades it has become increasingly evident that many Papua New Guinea societies fit awkwardly into the lineage model developed by anthropologists working among African peoples. Outwardly, there appears to be a certain degree of congruence but, on closer inspection, it becomes evident that other principles are at work and that a different rationale underlies social systems in Papua New Guinea. Unwilling to part with their theoretical and methodological concepts, anthropologists in the sixties began using terms like "loosely structured" (Pouwer 1960) or "structurally flexible" (Brown 1962) to capture the nature of societies, especially of those in the Highlands. Clearly, scholars were rather confused with what they found and attempted "to compare Highland social structures directly with African ones, without first dealing adequately with the Highland structures themselves" (Langness 1964:162). Summarizing in an earlier article on the problem, Barnes (1962:5) cogently remarked: "... it has become clear that Highland societies fit awkwardly into African moulds."

Later scholars did not discard descent completely from their analysis frames but they tried to assign it a different role next to other principles of recruitment and organization. In a re-analysis of Highland societies, James Weiner (1982), for instance, advanced a theory of substance and nurturance in which the ideas of siblingship and exchange are assigned a pivotal role. Whilst clan brothers are linked to one another by a code of "sharing" they stand in an exchange relationship with maternal and affinal kin. Throughout the Highlands, societies are known to be patrilineally oriented. The bias towards agnation tends to overshadow the vital links that exist, and continuously do so, between an individual and his maternal kin. Through semen (father) and blood (mother) an individual is ineradicably linked to both his parents, equally but in different ways. But in terms of recruitment an individual is assigned to his father's group. Weiner (1982:9) continues that "patrilinearity is the normative recognition of the valuation placed on the substantive link between a child and his father. And yet, an individual remains related to his mother through the link of blood. The recognition of this continuing link is represented in the following principle: *a man must compensate his child's maternal kin (his wife's agnates) for the blood that the wife and the child share with them.* Recruitment is thus contingent upon both patrilinearity and maternal compensation"(italics in original).

Moreover, evidence shows that Highland lineages very often contain a larger number of people who nominally belong to other groupings. They rank as full members of the lineage and as lineage brothers on the basis that they *share* residence and nurturance with their lineage mates and because they participate on the same side with them in exchange and warfare. Thus it appears that siblingship has very much more to do with social practice and the aspect of "becoming" than with the strict principle of filiation. This in turn points to the necessity of making the distinction between patrilinearity as an ideological principle and as a mode of recruitment.

James Weiner focused on Highland societies but the data of other scholars, working among coastal people or in island Melanesia, suggest that there societies also rest on foundations other than descent in the "African" sense, and that contrastive transactional modes play central roles in the creation and sustainment of social systems and for the way people distinguish between different categories of relatedness (cf. Schwimmer 1973; Clay 1977; A. Weiner 1976; Lawrence and Hogbin 1967; McDowell 1980). Burridge (1979:230) remarked that "...among Melanesians dogmas of descent, kinship, and group membership are of minor importance when set against the event, particularly the transaction, the exchange of foodstuffs and valuables: events whose relevances are inherently ambiguous, and whose rationalizations must differ with viewpoint and interest in the situation. Yet just these events mediate social relationships, make their nature manifest." For the area under closer inspection, Forge (1972:538) also noted that exchange and reciprocity were more apt principles for understanding social organization and concepts than descent.

Like their neighbours such as the Abelam, the Arapesh, the Urat, or the Gawanga, the Wam display an order of patrilineal descent. They are equipped with patrilineages, a two-section kinship system (cf. chapter 3), and a complex, laminated ritual organization which rests on a moiety basis. This is the dimension which I should like to call the social mould or conceptual framework of Wam society. To describe these elements and depict how they are conceptually patterned is one thing, bringing them into line with observed social practice is another. On first report, or at first sight, there appears to be a compliance between social action and this type of structure: men "follow their fathers" in terms of descent reckoning and inheritance of rights and estate, they marry women from the cross-kin section, and they entertain ritual exchange relations with agnates. However, a closer inspection uncovers an extremely high degree of randomness and idiosyncrasy. People appear to act socially as they like: they inherit from a wide range of relatives, they enter marriage unions which run counter to the canons of exogamy, and numerous ritual relations exist between cross kin and not between agnates. It is only when one probes deeper that one finds that, naturally, there is a logic to the system and that individuals cannot just do what they like. Nevertheless, many contradictions are left standing which, in turn, support Kelly's (1977:265) view that "the essence of social structure is the organization of ... contradictions...".

The presence of other, underlying principles of organization does not invalidate the cogency of the components of the conceptual framework but it demands that they are placed in the right context in relation to the empirical events of the social process. The framework imposes a meaningful order on the social universe, the centre of which, in my case, is constituted by the village of Warengeme. They provide parameters within which individual actors act and interact and through which they perceive, organize, interpret and evaluate social experience. Structure and action are intrinsically interlinked and meet on the common ground of social practice. Just as structure is determined by action, action is mediated through structure. This duality is reflected in Marshall Sahlins' aphorism "the practice of structure and the structure of practice" (Sahlins 1981:79). As Karp (1986:131)

notes, it becomes a fundamental concern "to examine how, in specific settings or social formations, structure is an emergent property of action at the same time that action presupposes structure as a necessary condition for its production".

PRACTICE AND THE DUALITY OF STRUCTURE

For my description of the Wam social system I have relied on some of the ideas and concepts developed by the social theorist Anthony Giddens, whose ideas have found growing acceptance and significance among anthropologists in the last decade or so (cf. Ortner 1984; Karp 1986). Giddens has developed a very rich and complex body of methodology (cf. 1976, 1979, 1984); however, I neither stick to it rigorously nor do I, in my own work, do proper justice to the standards he sets. The attraction of Giddens' theory of structuration lies in the fact that he allots primary importance to the time-space dimension in the constitution of social systems, and also because he assigns high significance to the aspects of individual action and reasoning, which allow the notions of autonomy, dependence and power to flow into the constitution of social systems. Political relations are not merely situated on the podium presented by the social order; they are intricately enmeshed in the production and reproduction of that order.

In an extremely dense definition, Giddens circumscribes what he understands by a social system: "Social systems involve regularised relations of interdependence between individuals or groups, that typically can be best analysed as *recurrent social practices*. Social systems are systems of social interaction; as such they involve the situated activities of human subjects, and exist syntagmatically in the flow of time. Systems, in this terminology, have structures, or more accurately, have structural properties; they are not structures in themselves. Structures are necessarily (logically) properties of systems or collectives, and *are characterised by the 'absence of a subject'*. To study the structuration of a social system is to study the ways in which that system, via the application of generative rules and resources, and in the context of unintended outcomes, is produced and reproduced in interaction" (Giddens 1979:65-66, italics in original).

The quotation demands some comments. The first refers to the role of the individual subject, actor, or agent. As in methodological individualism (cf. Popper 1950) the individual is assigned the locus of social change and maintenance. Undoubtedly, the actor is bound into the society of which he has become a member. He is the carrier of rules, beliefs and norms of that society but his activity does not constitute merely a Parsonian re-enactment of these. The social actor is to be regarded as a competent member of his society and one who "knows a great deal about the conditions of reproduction of the society of which he or she is a member" (Giddens 1979:5, original in italics). The possession of this knowledge does not mean that he (or she) acts only according to the canons of society and that action is consciously geared to reproducing the conditions of the group. Moreover, he mobilizes this knowledge for his own intentions and purposes and acts both in terms of short-term tactical deliberations as well as in view of long-term strategies, which means that individuals are "involved in relatively far-reaching transformations of their states of being – of their relationships with things, persons and

self" (Ortner 1984:152). This stock of social knowledge includes an individual's cognizance of the current pattern of relations in his social environment and the conditions in which, as well as the modes through which, these relations have been constituted. It also relates to the means and resources he must apply in pursuit of a specific social activity and in establishing meaningful relationships.

Giddens makes a distinction here between two types of knowledge, which he calls practical consciousness, on the one hand, and discursive consciousness on the other[1]. Practical consciousness "refers to tacit stocks of knowledge which actors draw upon in the constitution of social activity", whilst discursive consciousness involves "knowledge which actors are able to express on the level of discourse" (Giddens 1979:5, cf. also 56-57). The distinctive quality of practical consciousness is that agents need only be tacitly aware of the skills they have mastered. By stressing actors' tacit awareness of skills and procedures, Giddens is able to propose that practices can be performed without being directly motivated. Indeed, he claims that much day-to-day conduct occurs in this manner. The awareness of procedures of action can be conceived as a form of knowledge, i.e. a knowledge of "how to do something" or "how to go on". In this context, Giddens refers to mutual knowledge: a knowledge that is shared by all who are competent to engage in or recognize the appropriate performance of a social practice or range of practices (Giddens 1979:83-84, 251-253).

All actors possess both practical as well as discursive consciousness but especially the latter appears to be unevenly distributed; some actors possess distinctly more capabilities of discursive penetration than others. The issue of discursive consciousness is very closely linked to the question of the distribution of power in society. Given the importance of social events – as episodes where action is instantiated – and the role of performance in such moments, the issue of social reflexivity acquires significance. Social reflexivity is to be understood as "the use of properties of social life accountable, reportable, and observable" (Rogers 1983:93-94). The notion of reflexivity focuses attention on the ways a social actor in the "reflexive monitoring of action both draws upon and reconstitutes the institutional organisation of society" (Giddens 1979:255).

I should also like to include Popper's observation that individuals act according to the "logic of their situation" (Popper 1950:286ff). This does not refute the statement that actors operate strategically and by reasoning but only that the situation in which action takes place is also liable to influence the way in which a person makes decisions and acts, even if these are contrary to his long-term projects. Kapferer (1976:14) notes in this context that "clearly the properties of the situation, of the form and patterning of relationships themselves and the organization of power within them, might reduce an individual's control over his own actions and the behaviour of others. ... . These aspects related to individual decision making might themselves be produced by the form and content of the relationships which interrelate individuals and by the nature of the symbols through which they communicate."

Social actors have a great deal of knowledge about their society and they mobilize this knowledge in social activities but it is not consciously directed towards reproducing the

conditions of the social system. The social form which is produced and reproduced in the flow of time is an emergent property of human action and interaction. The order of a social system, its structuration, arises, as a rule, from the unforeseen actions taken by individuals.

Beside the concepts of the social actor and the system, action and structure are central terms in Giddens' methodological approach. The two terms are interdependent. Giddens captures the interdependence in his idea of the duality of the structure, which I shall return to shortly. Action, or agency, refers to the continuous flow of conduct by social actors. It is defined "as involving a stream of actual or contemplated causal interventions of corporeal beings in the ongoing process of events-in-the-world" (Giddens 1979:55). Agency is carried by human beings, agents; they act upon their environment and they interact with each other in diverse ways. Action is not only ongoing, a continuous flow, it is also recurrent, that is it is patterned into habitual shapes or forms which actors adopt and apply in their interaction. It is in this sense that activities become social practices. In Giddens' theory of structuration "all social action consists of practices, situated in time-space, and organized in a skilled and knowledgeable fashion by human agents. But human knowledgeability is always 'bounded' – by unacknowledged conditions of action on the one side, and unintended consequences of action on the other" (Giddens 1981:92).

Social systems are systems of interaction; they involve the recursive activities of human beings and exist in the flow of time. The time factor is an essential element because here the structural component flows in. Every process of action produces something new but, at the same time, all action exists in continuity with the past which supplies the means of its instantiation. Thus the flow of social interaction becomes structured, it is endowed with structural properties. For Giddens, the concept of structure has a "virtual existence" (Giddens 1979:63). It becomes manifest in instantiations or moments of action and interaction: "social systems are patterned in time as well as space, through continuities of social reproduction. A social system is thus a 'structured totality'. Structures do not exist in time-space, except in the moments of the constitution of social systems" (Giddens 1979:64-65). Structure does not connote a model which, in the Lévi Straussian sense, "has nothing to do with empirical reality". Nor does he regard structure as referring in its most basic sense to the form of sets, "but rather to the *rules (and resources)* that, in social reproduction, 'bind' time" (Giddens 1979:63).

Individuals apply social rules in their actions in order to achieve their purposes and attain their aims, and put to use their knowledge about the society they are part of. Giddens rejects the distinction which is frequently made between 'constitutive', and 'regulative' or 'sanctioning' rules because all social rules contain both aspects. To know a rule, says Giddens quoting Wittgenstein (1979:67), is to know how to go on, how to play according to the rule, which does not necessarily entail that the actor is able to clearly formulate what the rules are. Rules and practices are intricately linked to one another. "Rules generate – or are the medium of the production and reproduction of – practices" (Giddens 1979:67). This explains why rules cannot be exhaustively described or analyzed in terms of their own content, precisely because "rules and practices only exist in conjunction with one another" (Giddens 1979:65). Through the recurrent nature of practices, rules – in conjunction with

their moments of instantiation – acquire the property of principles which are used by the agents to define identity and situation. In this way structure acquires significance "above all because it provides a means for acknowledging that our experience transcends the particular moments when we enact society" (Karp 1986:135).

Two aspects of rules can be identified, although both are always intricately interwoven in knowledge and practice. The semantic aspect of rules refers to the qualitative and procedural meaning of practices, the locales associated with their performance and some of their likely outcomes. The normative aspect of rules refers to the same practices, locales and outcomes from the standpoint of the rights and obligations that establish their legitimate or illegitimate nature as well as their appropriate or inappropriate ways in which practices may be carried out (Giddens 1979:81-89). Resources are the facilities or bases of power to which an agent has access, and which he or she manipulates to influence the course of interaction with others. Two categories of resources, which again are subtly interwoven in concrete practices, may be distinguished in analytical terms. Authoritative resources are capabilities that generate command over people (rhetorical skills, managerial qualities, organizational talents, spatio-temporal positioning), allocative resources are capabilities that generate command over material objects (raw materials, means of production, produced goods) (Giddens 1979:91-94).

In Giddens' sense, structure "refers to 'structural property', or more exactly to 'structuring property', structuring properties providing the 'binding' of time and space in social systems. I argue that these properties can be understood as rules and resources, recursively implicated in the reproduction of social systems. Structures exist paradigmatically, as an absent set of differences, temporally 'present' only in their instantiation, in the constituting moments of social systems" (Giddens 1979:64). Further, "... social systems only have structural properties in and through their 'functioning' *over time*: the 'patterning' of social relations is inseparable from their continual reproduction across time" (Giddens 1981:91 italics in original). How deeply layered structures are is shown in terms of the historical duration of the practices they recursively organize and in terms of how widespread they are across a range of interactions. The most deeply layered practices constitutive of social systems are, for Giddens, institutions (Giddens 1979:65).

Through this notion of structure, Giddens attempts to show how structure is the unintended outcome of the agents' bringing about of effects – his interventions in the ongoing process of events-in-the-world – at the same time as it is the medium through which those effects are achieved. This is what he terms the duality of structure: "By the duality of structure I mean the essential recursiveness of social life, as constituted in social practices: structure is both the medium and outcome of the reproduction of practices. Structure enters simultaneously into the constitution of the agent and social practices, and 'exists' in the generating moments of this constitution" (Giddens 1979:5).

Social systems exist in the flow of time. Social process is an endless, recurrent, and vast flow of social events, of moments of social action. They constitute incidents in which conscious, knowledgeable and purposeful individuals act and interact. They involve transactions of goods and valuables, interaction through words and speech, instances of

helping and giving each other support, and also moments where antagonism and conflicts are manifested. Breaking down this flow into single bounded events is rather like structuring the colour spectrum and defining its various shadings as distinct colours. Such events not only effect things, they convey meaning at the same time. In such moments actors express their valuations, expectations and sentiments which contain messages about how the actors involved judge the present situation. What is of even more critical significance is that *events constitute precedents upon which actors not only evaluate the given situation, but which actually condition future action and which define the relationship between the actors involved from then on or, at least, until a subsequent event possibly redefines that relationship.* Naturally, this often happens within the parameters of the expected codes, such as when a man returns a pig to his ritual partner in exchange for a pig received on a previous occasion. Here the event sustains and confirms an ongoing relationship, a relationship which, actually, was constituted by an act of exchange at some time in the past in the first place. The relationship is, thus, both an outcome and the medium of a recurrent social practice. But often events are liable to change the pattern of an ongoing relationship, which demands that the actors involved reassess and, possibly, redefine the terms of their relationship. Thus, for instance, if a man marries a classificatory sister – which is against the stated norms but which happens frequently all the same and which, if the husband knows how to play by the "social rules", is granted legitimacy with no further problems – it constitutes a social event which has ramifications for those people directly and indirectly involved and also, unintentionally, for the system itself. What will the husband from then on call his wife's brother (previously also a brother to him)? How will he relate to his wife's parents who, through marriage, have been "converted" to cross kin? Will he retain his former rapport and still call them (classificatory) father and mother, or will he adapt his behaviour towards them according to the novel situation. What do the husband's brothers and parents call his wife, is she still a sister to them, as previously, or has she become a wife to them as well, through her union to their brother? Given the basic distinction in the code of behaviour between cross and parallel kin, these are issues of critical significance. Moreover, there are no standardized prescriptions which tell the actors how to react to such a turning, it is purely a matter of negotiation between the parties involved. It is in this sense that the aspect of "becoming" rather than "being" acquires significance in the ongoing construction and reconstruction of the social order.

I would like to make the distinction between two types of social events, which I call acts and occurrences. Acts are controlled events in the sense that they involve intentional, willed incidents of social action and interaction; they are things people do with, and, to each other consciously. They include a vast range of activities such as distributing food, giving someone betelnut or tobacco, bestowing a pig on someone, marrying, giving someone an ancestral name, lending someone land for gardening, threatening another with sorcery, turning down help from someone, telling lies about another person, and a myriad of other activities. Occurrences, on the other hand, are uncontrolled events, unintended incidents, things that happen independent of human design: illness, death, accidents, or natural phenomena like droughts, landslides, or crop failures.

The two forms of event are interrelated and flow into each other, in a dual sense. First of all, occurrences are acted upon by people. They set off a chain of willed acts, and people are moved into action and interaction by occurrences. They are required to assess and evaluate what has happened, they have to place the event in its right context and decide on how to react, and, possibly, they have to organize themselves. Death is a good example of such an occurrence. In the majority of cases, death is an unintended event but it has its consequences in the social dimension. Apart from the fact that death is hardly ever regarded as being a natural event by the people themselves but the outcome of an (un)social act instead, it demands that the deceased's relatives step into action. They have to stage a funeral feast and prepare the burial, which demands the organization of human and natural resources. The deceased's agnatic kin pool resources to help the sons and brothers of the dead person, who are in charge of the funeral procedures and the subsequent food exchanges between the deceased's kin on the one hand and various segments of cross kin and ritual partners on the other. Each step in the process constitutes an act. If someone refuses to help or to pool food, this too forms an act, an act of denial, which is registered and which is liable not only to have repercussions in the future but also affect the relationship pattern of those concerned. All these acts, the smaller contributions of food as well as the major transactions to cross kin and ritual partners, not only involve a transfer of goods or valuables, they also convey meaning. It is in the transactions that the quality of the relationship is expressed and, under normal circumstances, they call for a re-action by the recipients through which they likewise express their valuation of the relationship.

On the other hand, a person's act is likely to become an occurrence for a third party, in the sense that people are affected by the acts and interactions of others, which they originally had no involvement in. Thus, in the above case of the funeral, it is possible that a distant relative of the deceased receives a piece of pork from a recipient of food in one of the food exchanges following the funeral, although he himself had played no part in either the funeral or the food exchange. Thus, he has become affected by an act in which he played no part. For him the funeral constituted an occurrence but now that he has been indirectly linked in, he will be expected to re-act on his part by reciprocating the gift of pork later on. Certainly, he has options open. He can refuse to return the gift, but then his decision will most likely have repercussions on his relationship to the donor of the gift. But, possibly, this is exactly what the man intended.

Social events create the nodes of interaction in the flow of time. They are instantiations of action and interaction and it is in these moments that the system's structural properties become manifest. Acts and occurrences make things happen. They shape the course of social processes. Events create relations, they are liable to change the rapport in an ongoing relationship, they sustain or even strengthen a relationship, just as specific events lead to the curtailment of relationships. What is important is to note that events do not simply fade after taking place. Firstly, being elements in an ongoing process, they trigger off subsequent events and thus reverberate, and secondly, today's events become tomorrow's experience. After the pig received in an exchange event is distributed and

consumed, the event as such is concluded but the social significance of the event is sustained. The event lives on, it is kept in memory and it forms the basis upon which the further dealings between the people involved in the original event are rationalized and upon which the relationship is negotiated.

Events are discussed, praised, condemned or laughed about at the time but they are also recorded and kept in memory. In the process, some aspects are likely to be forgotten whilst others might gradually acquire a significance they originally – at the time of the event – did not possess. Thus, it is not necessarily the full or even correct versions of events which are recorded and which constitute the fabric of experience. The issue of who is in a position to construct an accountable version of a past event becomes a critical question. It is directly linked to the questions of power and influence. This is especially the case in a society such as the Wam which knows such a high degree of front-stage discretion but where, backstage, rumours and gossip proliferate and events are twisted and turned to comply with the interests of social actors contesting for status and influence. One aspect of the question of power, which I shall return to shortly, refers to the issue of the ability to produce a version of what actually happened in a past event and make it the socially accepted reading of the event. As Giddens (1979:83) remarks "power is expressed in the capabilities of actors to make certain 'accounts count' ", and, under certain circumstances, to enact or resist sanctioning processes.

THE CODES OF EXCHANGE

The rationale, upon which the majority of social practices are based, incorporates the principles of exchange and reciprocity. The fact that exchange plays a fundamental role in Melanesian societies was recognized long ago (cf. Codrington 1891; Banks 1887). Often, however, the early ethnographers made the error of regarding exchange as involving primarily economic transactions. Malinowski (1922, 1926) was one of the first to point to the importance of exchange in the ordering of society at about the same time as Marcel Mauss published his seminal work *L'essai sur le don* (1925).

Transactional theory and exchange models have a long tradition in social theory and have been developed in different schools of thought, such as symbolic interactionism in sociology and transactionalism in anthropology (Ortner 1984:146). Within the latter, Ekeh (1974) distinguishes between "individualistic" theories of exchange, more at home in the British tradition of anthropology, and "collectivist" approaches which have emerged from the European sociological tradition. In more recent years, the "individualistic" variety has received a major impetus through the work of Frederik Barth. Barth's *Models of Social Organization* (1966) can be seen as marking a paradigm shift in British social anthropology. His thrust was directed against the orthodoxies of structural-functionalism and normative consensus which regarded society as a system of morals logically prior to behaviour and which did not account for "any intervening social process between moral injunction and the pattern" (Barth 1966:2). The keynote of Barth's approach is that analysis must be processual and that its main aim should be to show how various social forms are generated and sustained through the interaction of its subjects. His focus is on

transactional behaviour understood as "sequences of interaction systematically governed by reciprocity" (Barth 1966:4).

Undoubtedly many of Barth's ideas are still of great value but at the same time he has come under criticism from various quarters. One of the main objections put forward refers to Barth's emphasis on the aspect of individual self-interest and the maximization of benefit on the part of the social actors (Kapferer 1976:3). As Kapferer notes, this might be truer for areas such as New Guinea than for other cultures. The notion that the value gained must be higher (or at least the same) than the value lost is important in the ongoing struggle for competitive equality and becomes manifest on the occasion of ritual exchange, but it is only half the story. The issue of exchange in the Wam social system is more deeply layered. It covers distinctly more ground than the transfer of "things", both material and immaterial, between two parties. More than being simply a mode of transaction, exchange is a form of communication through which meaning is conveyed and through which actors express their valuations of their social environment and define their relationship within it and towards the different categories of people that share this environment with them. Going even a step further, one could say that the distinctive categories within and through which social interaction takes place are conceptualized, created and sustained through the application of differential forms of exchange. Since exchange involves more than the transfer of material and immaterial goods we are justified in speaking not only of modes of exchange but of codes of exchange.

Before I continue I must clarify what is meant by exchange and distinguish between various forms of exchange. Manifestly, exchange concerns the giving and taking, or the transactions of "things" that are considered valuable (either animate or inanimate "things"), material (e.g. subsistence or hunting) products or immaterial goods (e.g. names, rights, etc.), or services. Two parties A and B enter into an exchange relationship and exchange two things x and y. This can be in the form of an economic transaction, in which case the things exchanged take on the quality of commodities, or it can refer to a social transaction in which case the things exchanged qualify as gifts. I shall be returning to this distinction later on.

Reciprocity, understood as the obligation to return what one has received – either in kind or in equivalent value – is the key to the functioning of exchange. In the absence of jurally binding institutions, reciprocity is as much a moral as a mechanical scheme. But the people do not rely merely on the honesty and integrity of their counterparts to fulfil their obligations. Society has at its disposal a range of sanctions to compel its members to meet their exchange obligations. The strategies of shaming and ridicule are means which people frequently revert to in order to get back what they once gave. Among the Wam the ultimate means is the omnipotent threat of sorcery. Usually the threat of sanctions is not necessary, since exchange and reciprocity are looked upon as the fundamental code of human interaction and form an integral part of the people's world view.

Besides the differentiation between commodity and gift exchange, it is necessary to make further distinctions between two basically different forms of transaction within the latter category of exchange. In his famous chapter on primitive exchange, Marshall Sahlins

(1974:193-194) distinguishes between two main forms which he calls "balanced" and "generalized" reciprocity[2]. I myself will distinguish between formal (Sahlins' balanced reciprocity) and informal transactions (generalized) or exchange, or simply between "formal exchange" and "sharing" The two categories correspond to what Paine (1976:63), following Barth, calls the T and the I mode of exchange, where T stands for transaction, I for incorporation.

Informal exchange, or sharing, refers to transactions effected or services rendered that are putatively altruistic. It includes the broad field of sharing of foodstuffs, tobacco, betel, of generalized hospitality, of assistance and help, and of visiting. It involves usually no items of intrinsic value or acts of special significance but, instead, makes up the multitude of everyday interactions. In its sum it is meaningful and carries weight. The expectation of reciprocity is indefinite and the return of what is received is not openly stipulated. Reciprocity is usually delayed. No account or ledger is kept, and the range of transactions is not specified. The failure to reciprocate entails no immediate sanctions, other than the cooling off of the relationship.

Formal exchange, on the other hand, is structured differently. It involves "objects" of high value, it occurs within narrowly defined contexts and on specific occasions; it is effected between distinct categories of kin; a close account of the things given and received is kept, and the failure to reciprocate is serious. Objects of value, in the main, come in three forms: pigs, shell rings, and long yam, whereby the latter category is never given alone but always in conjunction with other valuables. In a specific sense, women also fall into this category, even if their "value" transcends any ranking order which one can apply to the other forms of valuables. Women are not objects, nor do the Wam conceive of them as objects, but they fall into this category because marriage operates, at least conceptually, as an exchange of women between men.

These formal transactions can be seen to operate within two different spheres of the social framework. On the one hand we have formal exchange at life-cycle events, such as marriage or death. In the context of such events, exchanges are made between groups of people that stand in a cross-kin relationship to one another, i.e. roughly speaking between non-agnates, whereas, on the other hand, formal exchanges between parallel kin (i.e. agnates) take place within the ceremonial system, the tamberan and within the context of initiation cycles which again we can regard as a type of life-cycle event.

We can regard marriage, death and initiation cycles as single events in the course of which exchanges reach a climax and are condensed. But the relationships that are created and confirmed through these events are not finite or temporally bounded but, instead, constitute ongoing significant relationships of exchange. Partly this is due to the nature of delay in reciprocity as in the case of death payments or marriage transactions. In the ceremonial system, exchange partners, the so-called *pinandil* (*pl. pinantime*) or kawas (Tok Pisin), sustain a constant flow of reciprocal prestations outside the actual ceremonial cycles during which lesser quantities of pigs and foodstuffs are exchanged, again on the basis of delayed reciprocity. Such ongoing linkages through exchange create relationships of "reciprocal dependencies" (Gregory 1982:42).

The systems of kinship and lineage provide a baseline or chart of society, through which the Wam are able to locate themselves in relation to others, to identify and conceptualize their fellow members, and to order them into distinct social categories (e.g. cross and parallel kin). However, the positions on the chart are not fixed. It is through the mechanism of exchange (both formal and informal) that the Wam are able to convert categories and transform purely nominal linkages into meaningful relationships. In view of the absence of any form of centralized institutions of authority and of the fact that the lineages do not operate as corporate descent groups, the concepts of exchange and reciprocity actually become the central principles upon which social form is based, human experience structured and cultural meaning derived (McDowell 1980:65).

The Wam, as mentioned several times above, distinguish basically between two categories of kin, parallel and cross kin. The two categories are, on the one side, an outcome of the process of filiation: parallel siblings (brother-brother, sister-sister) "generate" parallel kin in the next generation, whereas the offspring of cross siblings stand in a cross relation to each other (and are able to marry). This is one of the differences, the other distinction is of more importance for the ongoing social process. This second distinction refers to the basically different code of behaviour which governs the relations between parallel and cross kin respectively, and which is intricately associated with differing exchange practices between the two categories. Whereas parallel or agnatic kin, in ideological terms, are associated with the code of "sharing", cross kin are identified with the notion of (formal) "exchange". The two kin categories are defined by what Bourdieu (1977:72) terms a differential *habitus*. The habitus refers to a system of durable and transposable dispositions, as principles of the generation and structuring of practices. For Bourdieu (1977:214n) the term disposition expresses the "result of an organizing action", it also designates "a way of being, a habitual state" and, in particular, "a predisposition, tendency, propensity, or inclination".

The habitus of sharing is brought into connection with the whole range of agnatic kin but it is especially associated with siblingship. Siblingship is the relationship where the notion of agnatic kin reaches its highest density. Thus lineages, when the occasion arises, which is rare, are conceptualized as successive groups of siblings and not as descendants of an apical ancestor. Siblings, the ideological notion goes, share a common social identity. They stand in the same relationship to their environment and, above all, they have an identical rapport to the same set of cross kin. Their relationship is moulded through shared experience – shared on the same side – they look back on a common upbringing which is often metaphorized by stating that "they shared from the same bowl of food". The siblingship is based on the recurrent practice of sharing, through which they have acquired not only a degree of unity but also share common interests. They conceptually belong to, or are incorporated in, the same group. Siblingship and sharing connote a high degree of trust and intimacy and, concomitantly, a certain degree of informality in interaction. Male siblings are free to take from each other without asking, they can use each other's tools, implements, and resources such as, for instance, betelnut. They can make demands on each

other but they are also free to decline each other's wishes. Because their interests are identical they also stand up for and help each other when the need arises.

This notion of siblingship, and with it the code of sharing, is not restricted to natural siblings only, nor is it delineated by membership to the same descent category. It is extended to all the people who stand in a parallel relationship to each other, even where the actors are not conscious of a direct genealogical linkage. The rationalization goes that their fathers were "brothers" and "shared" with each other – or, to the same effect, that their mothers were "sisters" – and that they are now doing the same as their predecessors. So much for the ideology; the reality of practice sees it differently, both in terms of the range of people that the code of sharing applies to and in terms of how the code is effected.

Whereas siblingship is associated with incorporation, intimacy, and informality, cross kin are approached and treated with a high degree of formality and restraint, which, however, does not exclude cordiality. What sharing means for parallel kin, formal exchange is for cross kin. Whereas in relation to siblings the idea of shared experience and common nurturance – food from the same bowl – is emphasized, the notion of exchange permeates the cross-kin relationship. In the same way that siblingship connotes the idea of agnatic relations in its densest form, affines do the same in the case of cross kin. Cross kin are generated through an exchange – a sister exchange marriage – and an exchange habitus reigns throughout the ongoing affinal relationship. Ideally, they themselves engage in a sister exchange marriage, thus reproducing and substantiating the pattern, and death sets off a chain of exchanges between the two remnant groups of cross kin – ideally conceptualized as two sibling groups who pool resources and exchange with each other. As in the case of parallel kin, the basic disposition of exchange is extended to all cross kin, although, factually, an individual enters into exchange relationships only with a restricted segment of this category.

Whereas the code of sharing implies and generates the notion of undifferentiated incorporation – the belonging to a group of like people – formal exchange ostensibly effects the opposite. A formal transaction generates, and expresses at the same time, a relationship of difference. It involves an act "between an A and a not-A" (Paine 1976:64), more precisely A is distinguished from a not-A through the act of exchange, whereas sharing suggests "we are all A together". Through formal exchange another person's singularity is created and expressed, it constitutes a recognition of the "otherness" of one's opposite. In view of the significance the basic theme of individuality has in Wam society, this is a critical step. It is through formal exchange that a social actor's "autonomy" is granted validity and acceptance. Autonomy, in turn, is a necessary precondition for the attainment of equality. One cannot regard and treat as equal someone whom one does not perceive as being autonomous, not least because autonomy is something that one demands for oneself in the constitution of an equal relationship. Exchange not only generates and expresses "otherness", it creates a strong bond between the two exchanging parties on the basis of reciprocal dependencies that emerge through recurrent transactions. Exchange is an ongoing relationship, in which the relationship is characterized by alternating inequality due to the mechanism of delayed reciprocity. What A gives, B returns at a later date; in the

meantime A holds the status of creditor, whereas B is the debtor. In the long run, however, the inequalities hold the balance and the outcome, at least in theory, is a relationship of equality. Moreover, on the basis of the corresponding habitus, exchange relationships are positively charged. In a meaningful cross-kin relationship it is precisely the fact of *not* making reference to the intermediate inequality which grants the bond its value. This basic disposition operates as an impediment to the emergence of conflict within the relationship.

In general, cross-kin relations, and other forms of exchange relationships, are characterized by a high degree of respect and restraint. Unlike among agnates, one cannot ask or demand things from an affine or any other kinsman with whom one stands in a cross relationship; nor can one, under any circumstances, give orders to cross kin. The principle code of interaction is one of "giving": outside the cycles of formal transactions, one gives one another small gifts of food, betelnut, and tobacco, just as one helps each other in work, or lends each other support when in difficulty. Nevertheless, exchange relations are not necessarily free of tensions but they are dealt with, as a rule, with more subtlety and are kept under control. One can make demands on a cross kin but these are encoded in a special way, namely by reverting to the use of tropes and by overexerting the code of giving: one gives in order to receive. This is done playfully and with great interactive competence, as when a man says to his affine: "Hey, you haven't seen my chicken running around your hamlet, have you?" when, in actual fact, he is saying to his counterpart, "it's about time you gave me back the pig you owe me". Tellingly, among the Wam, the principal joking relationship is the one between affines.

Summing up, we see that we have two basic kin categories and two basic codes, the code of "sharing" and the code of "exchange" which are, in theory, applied to the two distinct categories. As is shown, two of the basic themes in Wam society, autonomy and incorporation, are thus covered by the two central codes. Through "exchange" the autonomy of the individual actor is mediated, whilst incorporation into a social unit is effected and expressed through the code of "sharing". This brings me to the next two points. The first deals with the issue of the selection of meaningful relationships, the second refers to what I should like to call code supplementation.

The recognition of kin and the distinction between cross and parallel categories spans not only the village but the whole Wam area and reaches into the peripheries of the surrounding groups such as the Muhiang, Urat, and even Bumbita. Naturally, a person does not entertain identical relationships in terms of quality and intensity with the whole range of potential kin. Some relatives – both cross and parallel – play a distinctly more important role than others, and in the course of his "career" a person must make a distinction and selection between more meaningful and more nominal relationships where the valuation of the relationship in terms of the quality implied by the codes is concerned. That is, is someone a "real" brother in the sense of the code of "sharing", or does he merely carry the label "brother" on the strength of kin classification? The same applies to cross kin. Naturally, there exists a certain predisposition in favour of genealogical proximity – people one is genealogically close to are liable to play a more significant role than distant kin, because of a higher frequency of interaction – but proximity is not the

only constituent factor, nor is it the most important one. Frequent interaction does not invariably imply a positive relationship (as, for instance, the code of "sharing" implies), it can just as well imply a strained relationship where there is frequent strife and quarrelling. More relevance in this context must be granted to the creation and sustainment of meaningful – in the sense of positive – relationships through ongoing interaction and in accordance with the codes of interaction. One of the more conspicuous findings I made was the frequency with which the relationship between genealogically close kin did not, in practice, conform with the habitus implied by the code associated with them. Significantly, this was especially true where parallel kin were concerned. I found that a person's meaningful relationships very often included classificatory "brothers", "sisters", "affines", "fathers" and "mother's brothers", whilst consanguineal and other closer kin were registered as such but granted very little significance. Yes, he's my mother's brother, a man would say, tasol em nem tasol, but it's only a name or a label. What I found with such a high rate of frequency that it could actually be defined as a cultural trait was the cleavage in the father-son relationship, in the sense that men acknowledged the "genetic" bond between themselves and their genitors but did not recognize them as social fathers, on the basis that other men, frequently a (classificatory) mother's brother, reared and cared for them in later childhood and adolescence. This is never the case in the mother-child relationship[3].

What I want to point out here is that meaningful relationships have to be brought to life and continually nurtured and sustained through interaction. On average, an individual's range of such meaningful relations includes as many "pregiven" (on the basis of genealogy) close relationships as it does initially more distant ones which have been converted to significant ties through the application of the corresponding code. In effect, it is practice that generates brothers, sisters, fathers, mother's brothers, affines, and the like, while, at the same time, the generative moment is governed by the habitus incorporated in the appropriate code. The given pattern of kinship relations a person is born into only represents a set of potentialities. It is up to the individual himself in the course of his life to select, bring to life, form, shape, transform, or curtail relationships.

CODE SUPPLEMENTATION

The second issue, closely linked to the first, is what I should like to call code supplementation. By this I mean that under certain circumstances individual actors adopt an alternative code towards people who, nominally, are associated with the other code and kin category. In other words, parallel kin enter into exchange relationships with each other, whilst cross kin adopt towards each other a habitus of sharing. Amongst agnates, exchange relationships are established within and through the ceremonial system. Agnates become ritual partners who engage in ceremonial exchange. As a rule, of course, ritual positions were passed down from one generation to the next, so that a man inherited his ritual partner from his predecessors. It was quite frequent, however, that a man established ritual relations of his own liking, usually in addition to, and without severing his ties with, his

old partners in the course of his lifetime. It was through this channel that agnates established formal exchange relationships with each other.

Among cross kin the conversion process is less formal. It is one of a gradual adoption of the alternative code through close association over the years. It is often attained either through growing up together, or sharing residence for a prolonged period, and mutual support and affection. Under such circumstances cross kin are liable to adopt a habitus of sharing towards one another. Such a transformation of the quality of a relationship is often, but not always, marked by a switch in kin terminology: the two people concerned come to address, and refer to, each other by the appropriate parallel kin term: affines become brothers, wives become sisters, and mothers' brothers become fathers. These conversions are durable, and of relevance to the social form as such, in the sense that the descendants of two such individuals, as a rule, relate to each other through the adopted terminology and habitus: the children of affines-become-agnates also address and regard each other as brothers and sisters.

It is important to note that this type of transformation does not constitute a substitution of codes, but merely a code supplementation. This means that the previous habitus is not replaced by a new one, but merely complemented. It results in a merging of the two interactional codes, from which, actually, a completely new relationship quality emerges.

Thus, we see that the two codes of "sharing" and "exchange" are not exclusively assigned to distinct kin categories. Instead, we have a certain degree of overlap. For this reason I believe it is useful to distinguish between the two codes in terms of *ascribed* and *achieved* codes. For parallel kin the ascribed code is "sharing" whilst "exchange" is "achieved" through the instantiation of formal transactions. For cross kin it is the other way round. Their ascribed disposition is dictated by "exchange", it is through social practice and time that cross kin are liable to adopt a code of sharing in their relationship towards each other.

On the premise that both codes are imbued ostensibly with positive values – "sharing" secures incorporation, "exchange" forms the basis of autonomy – it is reasonable to ask why the need for code supplementation? The reason is that, against the background of the general ethos of competitive equality, each code in itself contains a number of serious deficiencies. The category of cross kin, which is closely associated with the code of "exchange", is, in its unmediated form, characterized by a high degree of restraint and formalism and a low rate of accessibility. And, although all the individual cross-kin relations are positively valuated as such, this kind of rigidity impedes spontaneous interaction, especially in times of need or distress. A person cannot directly approach a cross kin of his with a demand or some matter that is troubling him. Instead, in theory, he has to wait for his counterpart to initiate action or, at least, indicate that he is prepared to grant support. This means, that in cross-kin relations a social actor must cede initiative to his opposite. This, in turn, runs counter to the claim of autonomy of the individual[4].

The other half of the kinship spectrum, parallel kin, is ascriptively associated with the code of "sharing" and is characterized by traits which are ostensibly lacking in cross-kin relations, such as a high degree of approachability, intimacy and informality. Especially in

the relationship where agnatic notions attain their highest density, in siblingship, this is valid. Siblings share a social identity, they have common interests, and they are conceptualized as possessing a sense of unity. Among the Wam, it is on the level of social ideology that Radcliffe Brown's (1950:83-84) concept of the "unity of the sibling group" applies. However, the critical point here is that there is a significant disjunction between siblingship as an ideological proposition and siblingship as a relationship in practised reality.

The relation of siblingship contains one of the fundamental contradictions in Wam society because, besides the ideological proposition which portrays siblings as possessing common identity and unity, there exists the opposite, equally strong, notion that one's brother is one's most bitter and serious rival. Proximity does not necessarily create trust and unity, it breeds contempt. In this stereotype view, sharing acquires quite an opposite connotation. It is turned around and looked upon as "contending for" the same, limited, pool of valuable resources. The metaphor of "sharing from the same bowl" becomes one of "fighting over the little food the bowl contains".

Translated into a real life situation this means that towards each other siblings stand in direct competition for valued, but limited, resources which we could sum up as relating to the various forms of estate, to rights, women, and prestige. The idea that agnates unite and form a circle of security, trust, and shared identity turns out to be a chimera. Siblingship in its unmediated form does not necessarily implicate incorporation but, simply, bitter rivalry. Matters are aggravated through the circumstance that the sibling relationship, which involves the ideological tenet of unity and shared identity, is the only (intra-generational) relationship that harbours an intrinsic element of hierarchy, in the sense that the critical distinction is made between elder and younger siblings. This differentiation pertains to all sibling relations, natural as well as classificatory.

Conflicts within the two sets of kin take on different courses and develop differently. Hereby one notices a clear distinction in the way conflicts are registered, evaluated, and handled by the people involved. Conflicts between affines (and other cross kin) are regarded as extremely serious affairs. They occur comparatively rarely, partly just because social actors are conscious of the gravity of such an incident and are aware of the serious consequences it could produce. Any contention which threatens to develop into open conflict is quickly defused by the social surroundings of the two potential antagonists, at least this is what the relatives on both sides attempt. Mutual avoidance, at least for a period of time until things have cooled down or matters have sorted themselves out, is an appropriate way of bypassing conflict. A feature of significance in this context is the process in which a potential conflict between cross kin is deflected onto agnates and thus channelled into a form which is more acceptable to the people.

While the Wam display a strong aversion to cross-kin altercations, agnatic conflict conforms to an expected and also partly accepted cultural pattern. For them it is nothing unusual for agnates to quarrel and fight. Although violence and fighting are in no way imbued with high cultural value, the Wam do not shy away from confrontations, including physical confrontations, even if the odds are against them. This is especially the case

where siblings are concerned. Conflicts take various forms, ranging from avoidance to verbal disputes and abuse, destruction of property, physical violence, and either threats or accusations of sorcery. Sorcery is the most encompassing form in which conflict finds its expression, and almost invariably more serious incidents of antagonism are, in the end, cast in the idiom of sorcery. However, sorcery is not only the main form of conflict, it also represents the principal medium through which social actors carry out their debate on important issues which, otherwise, are difficult to handle discursively.

The management and resolution of conflict, in turn, is normally taken over by representatives of the cross kin of the two quarrelling parties. On the basis of their putatively positive relationship with both sides they are in a position to mediate and negotiate a settlement.

It appears that one of the basic dilemmas in Wam society concerns the disjunction between ideological tenets and the reality of social life: those people one, nominally, stands close to and shares identity with are not the people likely to grant one autonomy and equality freely, whereas those persons who would be inclined to do so are separated by the gap which formality and respect entail. One of the main tasks social actors face is finding a solution to this dilemma, which means finding a balance between autonomy and incorporation and, in the process, sustaining their claim to equality. In this context, they cannot really rely on the support of their lineage, since lineages hardly display any traits of corporateness. A social actor is required to build up his own network of meaningful relationships, drawing from an extensive pool of nominal kin links. This is effected in ongoing interaction and by the strategic application of the two basic codes and their variations which emerge from code supplementation. Significantly, negotiation is not only an aspect of conflict management and other political processes, it is central to the constitution of relatedness in the domain of kinship.

Furthermore, the fact that negotiation is an important factor in the constitution of relatedness implies that the domain of politics and the question of power are not issues that relate to processes that are effected on a "suprastructural" level of society; instead they form an intrinsic part of the kinship process itself. In a small-scale society like the Wam, which knows no centralized political institutions, not only do the political processes run within the parameters of kinship – all Wam are linked to each other through ties of kinship – but the constitution and reproduction of the basic social form is also in itself a political process. The sphere of kinship and the domain of politics, which deals with the distribution and management of influence and power in society, are in actual fact aspects of the same process; they involve the same basic themes, are enacted on the same principles and through the same modes, and are patterned by the same codes. Kinship does not refer to a static classification of individuals, it constitutes a process. It does not involve fitting people into pre-given positions within a given structural form but rather the process of creating relatedness through encoded interaction. The emphasis is on "becoming" and not on "being".

ON POWER

There exists a massive literature on the concept of "power" in the different branches of the social sciences like anthropology, sociology, or political philosophy. Like with the term politics, everybody has a clear notion what the term involves but providing an exact definition of what power means is a vexing problem. There is a fragile consensus that power refers to the ability – or the process by which such ability is implemented by one individual or a group – to control the behaviour of others or produce a desired reaction in them. Probably the most quoted definition of power is the one provided by Max Weber who defines power as "the probability that one actor within a social relationship will be in a position to carry out his own will despite resistance, regardless of the basis on which the probability rests" (Weber 1957:152).

Power is an attribute of all social systems; it constitutes a vital part of social process and is thus centrally involved with human agency or action, more specifically with willed or intended action. For Giddens, power refers to the transformative capacity by which social agents are able to take influence on the course of the events in the world. "Action involves intervention in events in the world, thus producing definite outcomes, with intended action being one category of an agent's doings or his refraining. Power as transformative capacity can be taken to refer to agents' capabilities of reaching such outcomes" (Giddens 1979:88). More narrowly defined, Giddens employs the term power as a sub-category of transformative capacity, to refer to interaction where transformative capacity "is harnessed to actors' attempts to get others to comply with their wants" (Giddens 1979:93). Power, in this relational sense, involves the ability of agents to produce outcomes where the realization of these outcomes depends upon the agency of others. "The use of power in interaction thus can be understood in terms of the facilities that participants bring to and mobilize as elements of the production of that interaction, thereby influencing its course" (ibid.)

I believe this is a fitting approach to the notion of power in a social setting such as the Wam display, which lacks any form of centralized institutions in which power is embedded. Power here is independent or individual power, it is lodged in the person of the social actor. One can make a distinction between the private and the public sphere in Wam society but the boundary between the two domains is flexible and not focused clearly, and the two spheres flow into each other. Basically this is because power is very much a personal attribute and because all forms of social relations are expressed through, and run their course within, the domain of kinship and on a face-to-face basis.

Like many other Melanesian societies, the Wam can be described as having a bigman system (cf. Sahlins 1966). Unlike a true chief, the bigman has no position of formal authority. It is a system of open status competition in which those men pursuing leadership status must construct their following and their position in an ongoing contest with like oriented competitors. It is those individuals that rank as bigmen, who are able to motivate others into action and are able to take influence on the decisions and behaviour of others. Their ability to do this rests on the mobilization of their authoritative and allocative resources and bringing them into play in a way which is compatible with society's rules.

Bigmen in most cases combine the qualities of eloquent speakers, skilled manipulators of wealth in exchanges, clever organizers of social events and talented managers of social relations. They attain their position by achievement and not by ascription. I prefer to use the term by achievement in place of achieved because it implies that the position or status they have attained is not assured indefinitely but continually contested by others and that bigmen have to continually sustain and justify their prominence through superior performance on occasions of significance such as wealth exchanges within the ceremonial system or, in the modern sphere, on such occasions as sorcery related village disputes (Stephenson 1998).

However, it must be noted that Wam bigmen do not command the same degree of influence as their counterparts in various Highland societies appear to do (cf. A.Strathern 1971). Their range of influence in socio-spatial terms is limited just as the scope of status differentiation is shallower than in other cultures. They have very limited potentials of coercing others to comply with their interests. The ultimate means is the threat and use of sorcery, for instance in the field of wealth reciprocation. This, in turn, constitutes the same means others apply to curb the influence of those bigmen who threaten to overstep the mark and transform a relationship of *primus inter pares* into one of domination and enduring hierarchy.

Groups which form in order to pursue collective activities, either of a ritual or a political nature, are action-sets which are centered on bigmen. Recruitment to such sets is based on diverse principles, which include either ritual association, shared residence, lineage affiliation, friendship, simply common interests, or a combination of these factors. At the core such groups are comparatively stable and enduring but on the fringe of these networks there is likely to be a considerable degree of flexibility and overlap with other, like groups, with men joining other groups and bigmen for specific purposes and when self-interest suggests such a move. Such action-sets are fragile entities not least because intermediate cooperation towards a specific goal is achieved against the background of a basic disposition of competition, not merely between different action-sets and their leaders but also between the members of the same group. As B. Allen (1990:186) notes "within this pattern the struggle for leadership was often fierce and unrelenting, with no individual having any greater right than any other to positions of power and influence." The acknowledged bigmen were those individuals who could prevail in this competition on the basis of their superior skills and qualities and translate these qualities into superior performances on specific occasions.

NOTES

[1] Giddens (1979:5) does not exclude the realm of the unconscious but for his approach the two forms of consciousness are predominant.

[2] Sahlins (1974:195) discusses a third form which he calls negative reciprocity and which refers to "the attempt to get something for nothing with impunity. I do not deal with this form of exchange as a category in itself.

[3] It is to be expected that the practice of labour migration lent this tendency strong support but it does not appear to be an outcome of labour migration. Old men reported the same habit from times before men left the village to work in the colonial economy.

[4] A brief example: There were two trade-stores in Warengeme which were run by two men, who stood in a mother's brother/sister's son relationship with each other. One day I asked the younger of the two, why he didn't

make the suggestion to the other owner to fetch the goods for their stores in Wewak jointly and, thus cut the transport costs by half. "Yes", the man answered, "that would be a good idea but I cannot approach B. with such a suggestion because he is my *anheil* (MB)."

SECTION ONE
THE SOCIAL MOULD

In this first section, which I term the social mould, I deal with the different conceptual parameters in which the social process unfolds. They constitute the framework in physical, social, temporal, and ritual terms. The section is divided into four chapters, i.e. chapters one to four.

Chapter one deals with the physical realm. It contains a description of the layout of the present-day village with its territorial divisions and residential pattern. A further issue are the factors which have over the last few decades changed the face of the village, the most important one being the road which links Warengeme to the Sepik Highway, which runs south of the Wam area. Other topics in the chapter are residential fluctuation and the growth of population, which has become an increasingly important issue over the last few years.

In chapter two, I begin with a description of the various modes of classification of social categories. I then go on to reconstruct the settlement history of Warengeme. In view of a growing population, the expansion of cash cropping, and the gradually increasing threat of land shortage the topic is of relevance. It is becoming a critical issue whether a person belongs to an original, an early immigrant, or a recent immigrant lineage. The last part of the chapter examines the naming system. Names are extremely important resources. They provide the key to the possession of property and to the rights of usufruct, and constitute central assets for creating meaningful bonds of relatedness.

Chapter three is rather technical. It examines the concepts of kinship and marriage. The Wam purport a two-section kinship system which emerges from a system of bilateral cross-cousin marriage. From the viewpoint of the individual it divides the social universe into two categories of people: agnates or parallel kin on the one hand, affinal/matrilateral, or what I call cross kin, on the other. What looks like a simple and straightforward order at first sight, proves to be an intricate and highly flexible system in practice, and one which leaves much room open for optation and manipulation.

The fourth chapter deals with ritual organization. The secret male cult, the tamberan, forms a pivot of Wam culture. Social and cultural formation hinges on the tamberan. It involves the issue of male initiation into three separate but interlinked grades called *nau*, *nambo*, and *kwal*. Through initiation men enter into the realm of manhood. Through professing to be in control of the tamberan, and thus having command over the secrets of fertility, growth and strength, men set themselves apart from, and above, women. It provides the legitimacy to the claim of male ascendancy. The tamberan is founded on ward organization and a complex, multilayered dual division in which different ritual segments crosscut the basic moiety order.

CHAPTER ONE

THE PHYSICAL REALM OF WARENGEME VILLAGE

The village of Warengeme is made up of sixty named residential sites or hamlets, which are spread over an area of approximately 3 square kilometers. *Aniher* is the common term for both hamlet and village in the Wam idiom. Today the Tok Pisin term banis is very often used to designate the hamlet. Warengeme displays a dispersed settlement pattern. In Hogbin and Wedgwood's (1953:257) terms Warengeme approximates a "multicarpellary parish". The village is divided into four named wards (Tuzin 1976:91), called *aniher sululepeni* in Wam: Wolhete, Wohimbil, Talkeneme and Warengeme, the latter giving the village its present name when the colonial era began. These wards are social, political and ritual entities, each comprising – outwardly at least – at its core a number of descent categories or lineages, and focusing on a specific ceremonial ground and spirit house. These *aniher sululepeni* or kastom ples as they are commonly referred to in Tok Pisin, are not territorial units in the strict sense of the word, i.e. they are not bounded or residentially contained, but the people do roughly associate the different areas of the village with the separate wards.

THE VILLAGE LAYOUT

For administrative reasons the village was divided into two parts by the administration when colonial rule began: Warengeme 1, comprising the upper half of the village, i.e. the wards Wohimbil and Warengeme, and Warengeme 2 made up of the wards Wolhete and Talkeneme (also called Simete). The division is not arbitrary. It reflects a traditional alliance pattern, but whether the administrators were aware of this I do not know; possibly they asked the people. The opposition and temporary open antagonism between the two parts of the village is a recurrent issue in this study, especially in the later parts. In everyday life the opposition is not felt so distinctly; it is only in phases of heightened tension, mainly during disputes about sorcery, that the rift becomes felt. At the moment I need only point out that Wolhete and Talkeneme were traditional allies, and that, to a lesser degree, Warengeme and Wohimbil formed an alliance in times of need. The people of Warengeme 2 say of themselves that they are the original inhabitants of the area, whereas the occupants of the upper village are said to be immigrants. A closer inspection discloses that this is not necessarily the case but it is the ideological basis upon which much of the political discourse in the village is carried out.

Mountain ridges and crests form the areas of settlement. With the exception of one settlement area, which lies on a separate ridge, the village is situated on a system of mountain crests and spurs wedged in between the two creeks called Wambe and Ulambe, which are tributaries of the Nanu and Amuk rivers respectively (cf. map 3).

The main ridge on which Warengeme lies winds itself snakelike in a south-easterly to north-westerly direction. The mountain top is of irregular width. At places it is only ten to fifteen meters wide, in others it spans forty to fifty meters. There are many crests of different sizes branching off to either side. The ridges are similar in shape. Steep slopes at

the top lead over into less precipitous shoulders and then drop off again steeply down to the small creeks which run at the bottom. The whole area is covered by secondary forest. The only open patches to be seen are where the people have prepared gardens or where earlier there used to be gardens which are now slowly growing over again. The few spots of primary forest are on land which is too steep to garden and on other inaccessible areas which are associated with the dwellings of bush spirits, called *sambigile* in Wam, masalai in Tok Pisin. Sago patches are numerous, not only down at the level of the streams but also in hollows on the more gently sloping parts of the mountain sides. The whole area is divided into tracts of land of varying sizes which are again subdivided into single named smaller tracts or plots. There is no part of the land which is not claimed by an individual or a single family.

Physically Warengeme falls into two parts. The main and larger section is centred on and around the main ridge. Today, the small feeder road which connects the Aresili Community School and the Catholic Mission station with the Sepik Highway runs along the ridge top. A large number of hamlets are strung along the road like beads on a string (cf. map 4 below). Selmbuneme is the first hamlet after the road crosses the border between Bana and Warengeme. The ridge gently rises until it opens up onto a small plateau after approximately one kilometre at the height of the hamlet Eimuteneme. Many of the settlement sites lie directly by the roadside, others, like Akumeneme, Belkunku, or Enniki and Tillenge, are slightly set back from the road on sites where they form small hamlet clusters. One large section of the village is made up of hamlets which are situated on the more gently declining northern slope leading down to the Ulambe creek. The most distant hamlet here lies beyond the Ulambe at the foot of the mountain that leads up to Bombossilme, which is a ward belonging to the village of Hambini. The great majority of inhabitants living in this section belong to Wohimbil ward and the area is generally denoted as the "side of Wohimbil". In terms of military defence, this settlement area is extremely vulnerable, from which one could draw three conclusions: Firstly, that Wohimbil is a new settlement area which people have been using extensively only since pacification by the Australians or, secondly, that it is populated by immigrant groups who had to accept less advantageous sites on arrival, or else, thirdly, that the immediately neighbouring villages to the north and north-west, in this case Hambini and Selni, were allies in war so that no immediate danger emanated from this direction. As we shall see as we go on, all three conclusions are partly correct.

When the road reaches Eimuteneme it forks. The right hand branch follows the steep northern spur which leads up to the village of Selni, the left-hand track leads to the Aresili Community School and the Catholic Mission. On the branch to Selni as well as in the sector between the two branches there are further Warengeme hamlets.

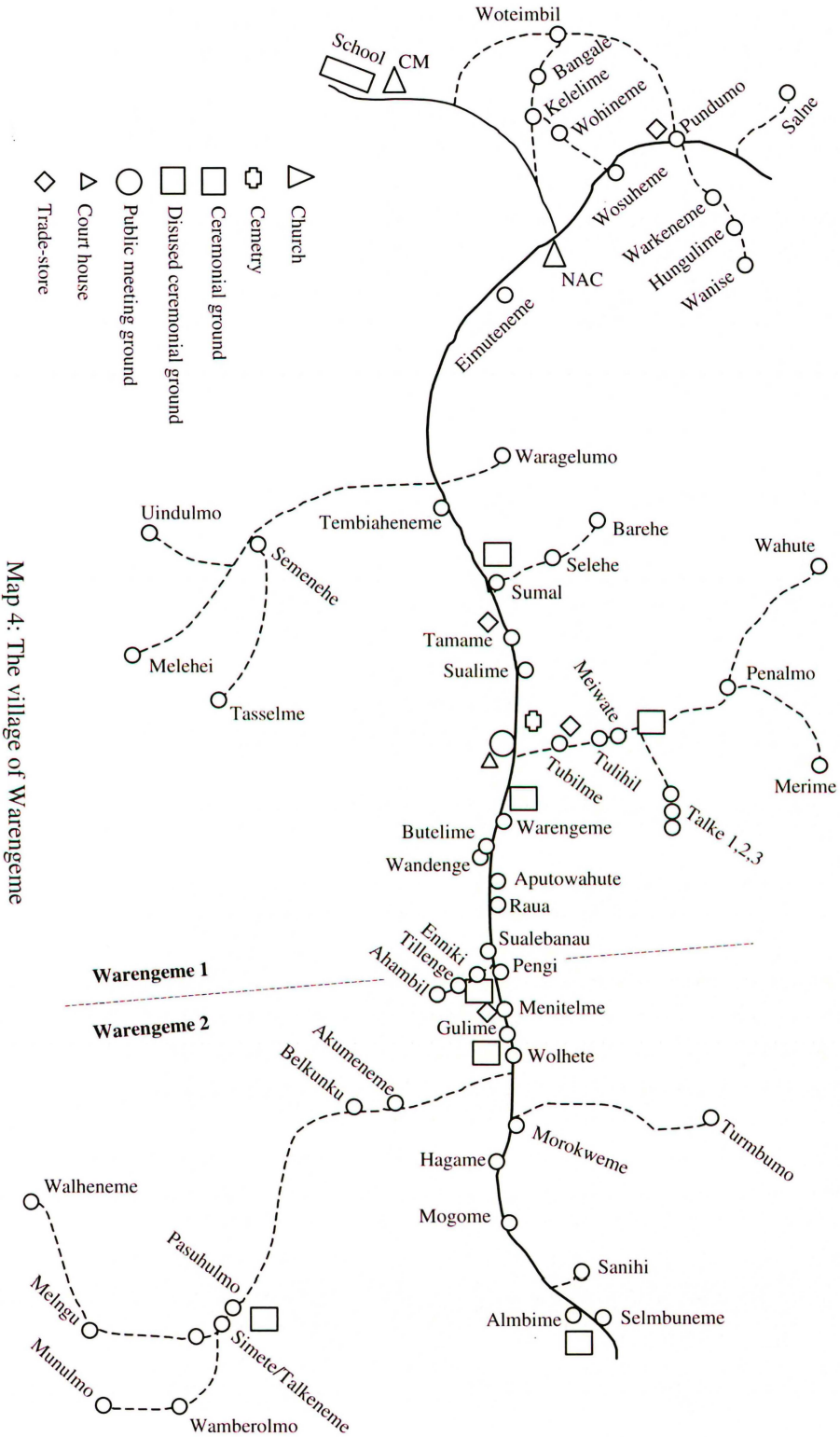

Map 4: The village of Warengeme

The second, and smaller, area of Warengeme village is called Simete. It consists of six hamlets. It lies on another mountain ridge altogether (see plate 1) and is separated from the main ridge by the Wambe creek. Simete is the newest settlement area. It was established in reaction to, and shortly after, the earthquake of 1935. The original habitat of the Simete people was a narrow and sloping crest which branches off from the main ridge and leads down to the Wambe creek. It was called Talkeneme and used to form a ward of its own. The earthquake caused many major and minor landslides and destroyed several of the Talkeneme hamlets. Now the area is deserted and overgrown. Today both Simete and Talkeneme are used as names to designate the ward. Which term is used depends largely on the context under discussion but, generally, the term Talkeneme is used more frequently.

The village has no clear territorial boundaries, with three exceptions. These are the points where the modern road enters or leaves the village area. Here the boundaries are clearly marked by cordylines. On the road that leads to Aresili village – to be more precise: where it used to lead to Aresili, the road has been closed for nearly ten years now and is overgrown – the Wambe creek is recognized as the border. But otherwise the village territory is defined by the people's land claims and residential choice. Residential moves and the foundation of new hamlets are common and frequent events, and usually there is no ambiguity as to whether a new hamlet belongs to Warengeme or not. It is only when settlement sites are established in the intermediate zones between villages, or to be more precise, in zones between villages that in public opinion clearly belong to neither one nor the other settlement, that their status is disputed. In 1987 two fully adult men who belonged to one of the Talkeneme descent categories, but who had lived in Bana for most of their lives, returned to their natal village with their families. The elder of the two, Suambu, settled down in Pasuhulmo, a hamlet in Simete, his brother Umbwahi established a new hamlet on the periphery of Warengeme (but on his own land). Subsequently, he was no longer fully integrated in either of the two villages. This became evident in public meetings and disputes, where his opinion was not valued and he was not taken seriously. The Warengemes told him to attend to affairs in Bana, but the same happened to him there, where the people told him he should now look to Warengeme, where he was living.

Three historical events have significantly influenced and shaped the appearance of Warengeme in the last fifty to sixty years. The first was the above-mentioned earthquake in 1935 which forced many people to abandon their hamlets and resettle in new locations. The second was the Japanese occupation in 1943/44 during the Second World War which made the people flee the village and seek refuge in the surrounding bush. There they lived in small make-shift camps in hiding for many months until the Japanese were driven out by the advancing American-Australian forces. When hostilities ended some families did not return to their original homes but established hamlets on the site of their previous hiding places. The present hamlets of Uindulmo, Woteimbil, Hungulime and Wanise and some others are such cases.

This brings us to the third factor that has changed the appearance of Warengeme, and that is the road. In earlier days, narrow and winding paths connected the various hamlets

with each other, as is still the case in the more remote parts of the village. Dense undergrowth and trees made alternative access to a hamlet difficult or next to impossible. Many of the hamlets had stockaded entrances so that enemies could not rush the hamlet. Entry was in single file. In comparison, the hamlets today lie wide open. On the main ridge much of the undergrowth and many trees were cleared away when the road was built. Even before that the colonial patrol officers saw to it that, in their campaign to prevent the spread of diseases and raise the standards of hygiene, the people kept their living areas clear and open (see plate 2).

The road exerts a strong attraction and has a distinct pull effect on the inhabitants of Warengeme (see plate 3). It is their main connection to the extended economic and social environment, which has gained in influence and has become increasingly important over the past decades. Money, coffee, and people pass up and down the road, and in and out of Warengeme. Most importantly, news and information from the outside world travels along the road. What someone saw in Maprik, or what happened yesterday in Wewak, is often more important and attracts more attention than many items of local news. With the advancing integration of the village into a wider economic, social, and political system, the road has acquired more significance than just a means of facilitating travel from one point to another.

All locations of public significance are situated on the road. This applies foremost to the Aresili Catholic Mission Station and the Community School, for which the road was built in the first place. In the village the two main trade-stores are in roadside hamlets, one in Menitelme the other in Tamame, and the same goes for the three coffee-selling-points. The church of the New Apostolic Church is located on the road in Eimuteneme, and the Catholic prayer-house which serves the people for prayers on Sunday and Wednesday evenings also stands at the roadside in Tamame. The public meeting place where the weekly council meetings and all the important public disputes are staged is also situated on the road. At the edge of the meeting place stands the Warengeme courthouse and the (now derelict) haus kiap, the official government rest house.

Public life is strongly centred on the road section of the village. It is no coincidence that all the public figures, the modern elected leaders and men seeking prominence in public, have set up residence on the road. These include the present and the former Members of the Provincial Parliament for the Wam-Urat constituency, all the village councillors Warengeme has had since the mid-sixties, the village magistrate and his secretary, and also the various bisnis men (coffee-buyers, store-owners) that the village has. Where natural land rights have prevented road-side residence, the individuals concerned have managed to acquire rights of residence through alternative means.

When government officials or church emissaries visit the village, their business never takes them away from the road section of the village. To outsiders, Warengeme consists of the hamlets they see from the road. When I first visited the village in early 1984 and asked a man to show me around, it was the road section I got to see. I knew that the population numbered approximately six hundred, but when I pointed out that I couldn't quite believe that the village I had seen contained such a large population, I was simply told that there

was no more to the village. The road has effected a clear partition of the village into a more, and a less, important part. The people themselves are conscious of this fact and express this by the distinction between ples (place, settlement) and bush, by which they refer to the section along the main ridge and the more distant hamlets of Wohimbil and Simete respectively.

A further effect the road has had on the village is that it has created a de-personalized or neutral zone within Warengeme territory, whilst otherwise land and land ownership are intimately linked to individual persons and claims. The whole village territory (which by far exceeds the area of settlement) is divided into innumerable tracts of land, all of which are claimed by some individual or other who bears, or at least has access to, the ancestral name connected to that specific piece of land. People of the same descent line usually own land in the same vicinity, with numerous notable exceptions, and the same could be said – but here in only a very broad sense – of ward mates. That is to say, for instance, that Wohimbil people do not on the whole own land south of the Wambe creek but more in the direction towards Selni and Bombossilme, just as Warengeme ward members are more likely to own land in the upper confines of village territory than in the lower parts.

The range and degree of village mobility is narrow and low and the pattern of movement is very regular. In the daily routine, men and women commute between their hamlet and their food or coffee gardens or sago patches and make small detours in the course of the day to tend to minor matters such as washing at the stream, collecting betelnut or tobacco from an old garden or visiting a friend in a nearby garden.

Movement is confined to a more or less distinct area of village territory, and visits to other parts are infrequent and do not occur unless there is an invitation or, at least, a pretext. People are closely associated with their land or territory and, if there is no specific reason, people do not leave it. There are no explicit rules about where you may go and where you may not – except of course for entering another person's garden or sago patch, which is regarded as trespass. However, the unmotivated presence of a person in a part of the village territory he or she is not closely associated with is not approved of, and raises suspicion. It will not have direct consequences but the event is registered and remembered, and should, some time later, an irregularity occur in the ward or group of persons related to that specific area (such as the death of a ward member, crop failure, etc.), the episode will be recalled and the person in question will have to explain his presence at the time.

The road has changed this pattern to a considerable extent. The road is open to everybody and is looked upon as neutral ground although, of course, nominally each section still belongs to some individual. People move freely up and down the road, and the presence of a Simete person on the road to Selni, or a Wohimbil man in Wolhete, is a complete normality and raises no questions. The presence of people from other villages is tolerated and accepted, even if they are unobtrusively scrutinized and the villagers often ask them where they are going to or coming from. At night, too, otherwise regarded as the time of heightened danger, there is movement on the road; especially the youths stroll up and down the village in groups in the evening. Thus, the road is also looked upon as a comparatively safe area due to its openness and the fact that there are houses alongside it,

and also because the actual road is not associated with individual land claims; this defuses the suspicion of illintent.

Moreover, the road conveys meaning. It symbolizes modernity in all its forms and stands in contrast to everything that is associated with kastom. The road signifies development, mobility, cars, coffee, and money, whereas the remote hamlets, the narrow winding paths through the dense bush and past spirit dwellings convey the notion of the past and the old way of life. In a certain sense, the task the people of Warengeme have set themselves – overcoming the past and entering into a new era – finds its expression in the physical dimension of village order.

POPULATION

In 1988, Warengeme had 663 inhabitants living in a total of 60 named settlement sites or hamlets. 272 inhabitants resided in 25 hamlets in Warengeme 2, 391 lived in the 35 hamlets of Warengeme 1. In 1985, the figures were 628 inhabitants, 251 in Warengeme 2, 377 in Warengeme 1. Thus, we have a net growth of 35 persons. The major part of this increase is due to natural growth. Between January 1985 and April 1988, 58 babies were born; in the same period 34 deaths were registered, resulting in a natural increase of 24. A further factor influencing the population size is migration, in-migration as well as out-migration. In the period of observation, 23 persons left Warengeme, at the same time 34 people returned to or, arrived freshly, in the village. Of the 23 out-migrants, 9 persons left the village for urban centres. Two of these were young girls who were admitted to the Domestic Science School of the Catholic Mission in Wewak; seven young men left for Madang, Lae, and Rabaul respectively, in search of jobs. Not included in this number are three young men who had left for one of the towns but had returned to the village by 1988.

The other out-migrants include adult women and children who left Warengeme to settle down in one of the neighbouring villages. One woman married to Hambini, the others were women married to Warengeme as second wives, who went back to their natal village in order to safeguard land which had been left in either their own name or in the name of one of their children. One woman returned to Luwaite after the death of her husband.

Of the 34 in-migrants, three of them, all male, were returnees from urban centres, two were women that had freshly married to Warengeme. The others comprised Warengeme men with their families returning from one of the neighbouring villages to their natal homes. One was an old bachelor, the others were families whose the children were gradually coming of age, and the parents judged it wise to bring back their children to Warengeme in order to forestall any queries and disputes about their claims to land ownership.

Of the 663 inhabitants of Warengeme, 54 persons were from other villages and areas. 39 were women married to Warengeme. More than half of these (22) were from the immediately neighbouring villages of Hambini, Selni and Bana. Three of the 54 foreign residents were men who were residing both uxori- and matrilocally, i.e. they were living in their wife's village, which at the same time was their mother's natal village. The remaining twelve persons refer to the children of these two men.

Residential fluctuation in Warengeme is comparatively high. When I returned to the village in 1987/88 the village had not changed at first sight. Everything looked more or less the same with the typical chain of hamlets strung along the road on the central ridge. However, on closer inspection, this impression proved to be wrong. At the hamlet level, five hamlets had been given up, two in Warengeme 2 and three in Warengeme 1, and ten new ones had been established, seven in Warengeme 2, and 3 in Warengeme 1. This in itself shows that the village had changed in its physical appearance. However, fluctuation not only means the desertion and establishment of new residence sites but also refers to the composition of the existing ones. A look at the list of hamlets below (cf. table 1) shows that a large majority of them had experienced changes in composition, some of them to a considerable degree.

In Warengeme 2, Pasuhulmo and Aremeneme increased by 6 inhabitants, whereas Selmbuneme decreased by 11 from 21 to 10 occupants. In Warengeme 1 fluctuation was more pronounced. Butelime and Selehe both decreased by 8 inhabitants, from 38 to 30 and from 20 to 12 respectively. Penalmo shrunk from 15 to 5 occupants, Wosuheme from 21 to 10. Tamame experienced the largest decrease, from 31 inhabitants in 1985 to 13 in 1988. On the other hand, increases are registered in a number of other hamlets. Warengeme grew from 10 to 17 persons, Tubilme from 9 to 23, Tembiaheneme increased by 9 persons from 10 to 19, and Eimuteneme grew even more, from 22 to 37 occupants.

In quite a number of cases in our list, hamlet size had remained constant or, at least, not changed considerably in the intermediate three years. However, we cannot conclude from this that such a settlement had not experienced notable demographic changes in the meantime. Morokweme in Warengeme 2, for instance, numbered 9 inhabitants in 1985 and 8 in 1988. These figures hide the fact that the hamlet underwent notable changes in the period in between, and displayed a different composition in 1988 from that of 1985. The first change occurred when Wangi, the son of the principal resident (Uhane by name), returned from Madang. He got married shortly after his return and brought his wife with him to reside in Morokweme, where she gave birth to a son some months later. During the same period, Uhane's eldest daughter, who was not married, became pregnant and gave birth to a daughter. The baby survived but she herself died giving birth. Again, shortly afterwards two elderly residents (Uhane's wife's mother and her husband) moved away from Morokweme and set up residence in Mogome, a new hamlet which had been established nearby. In 1987, the second daughter left the village for Wewak, where she was admitted to the Catholic Mission domestic science school. The brief example serves to show that although hamlet size changed only insignificantly, the internal composition and the pattern of relationships was completely different in 1988 from what it was in 1985.

These fluctuations are partly due to the above-mentioned demographic factors, death, birth, and in- and out-migration, but they also result from a comparatively high internal mobility. Between January 1985 and April 1988, I registered 42 village internal residential moves, involving both single persons and households. This affected a total of 127 persons, i.e. 127 persons shifted their site of residence within the mentioned time span. This is approximately a fifth of the village population. If we add the number of in-migrants (34)

and out-migrants (23), the figure increases to a total of 184 individuals that were "on the move" in some way or another.

Warengeme 1	**1985**	**1988**
Raua	7	-
Aputowahute	6	6
Wandenge	38	30
Warengeme	10	17
Tubilme	9	23
Tulihil	14	14
Meiwate	5	7
Talke 1	4	2
Talke 2	4	4
Talke 3	5	5
Selehe	20	12
Barehe	-	8
Selehulaha	2	-
Salkoteneme	1	-
Penalmo	15	5
Merime	11	13
Wahute	10	7
Sualime	10	17
Tamame	31	13
Sumal	12	18
Waragelumo	8	7
Uindulmo	10	11
Melehei	4	4
Tasselme	4	4
Tembiaheneme	10	19
Eimuteneme	22	37
Wosuheme	21	10
Warkeneme	8	8
Hungulime	3	4
Wanise	14	16
Salne	-	8
Bangale	11	5
Kelelime	-	8
Wohineme	8	4
Semenehe	5	5

Warengeme 2	**1985**	**1988**
Munulmo	12	7
Sempeneme	3	-
Wamberolmo	12	8
Pasuhulmo	18	24
Aremeneme	9	15
Selnguolme	15	-
Melngu	21	20
Belkunku	8	6
Akumeneme	9	8
Wolhete	9	8
Morokweme	9	8
Turmbumo	13	12
Hagame	23	19
Almbime	11	14
Selmbuneme	21	10
Walheneme	-	10
Simete	-	8
Umbwalime	-	7
Mogome	-	10
Sanihi	-	5
Hulelime	-	1
Menitelme	-	16
Ahambil	6	7
Tillenge	21	19
Enniki	18	19
Pengi	4	3
Sualebanau	9	8
Warengeme 1	377	391
Warengeme 2	251	272
Total	**628**	**663**

Table 1: Population and hamlets in Warengeme

Hamlets often form clusters with the hamlets joining on to each other or standing in very close proximity. Places like Akumeneme-Belkunku, the Enniki-Tillenge-Ahambil cluster, or the assemblage of hamlets around Butelime-Wandenge-Warengeme could be mistaken by an outsider as forming one single large hamlet. But this is not the case. The individual sites are clearly distinguished from one another in terms of name and individual ownership. Speaking in very general terms, people refer to the different hamlet sites as belonging to separate lineages, but closer inspection reveals that each residential area is

associated with the name of a distinct individual owner. Domiciliary rights pass through the same channels as other items of estate.

Hamlets form residential groups consisting in the most cases of a number of domestic groups (Verdon 1979:402). Domestic groups form productive, conjugal and consumptive units. The principal function of residential units is what the term infers: the people live together, which is important in itself, but co-residents do not necessarily garden together or become engaged in other economic activities. Normally, a household is composed of a conjugal family that resides together in a sleeping house. Young boys and girls live together with their parents in the same house. Girls leave the parental home when they reach puberty and, thus, become dangerous to their parents, especially to the father. They take up residence with either other young adolescent girls or with relatives such as married elder siblings to whom the range of food and cooking taboos is not extended. Today this is less strictly regulated; adolescent girls remain in the parental home and only live separately during menstruation. Boys remain at home longer, but the older they get the more they become "vagrants", living and sleeping in a number of places and different hamlets with relatives and friends. They gradually settle down after marriage but usually not until their first child is born. Sometimes young men build what they call a haus boi (a bachelor's residence[1]) and live together for a while. They still, however, remain dependent on parents or other kinsfolk for food.

Household work is normally done by the wife. She is helped by her daughters or other female members of the household living there. In polygynous settings each wife occupies a house of her own with her children. The husband shifts between his two wives – there is no case in Warengeme where a man has three wives concurrently – in a fixed rhythm. In the majority of cases co-wives do not reside in the same hamlet, but live in separate settlements instead. Although the women living in polygynous arrangements claim that co-residence is harmonious – the husbands do so anyway – experience shows that in the majority of cases there is much strife and jealousy between the co-wives.

A Warengeme man basically enjoys a high degree of optation in terms of residence. He is free to settle down on any tract of land to which he has valid claims of ownership either through patrilineal birthrights or through ownership rights obtained through the naming system. Very often people follow the invitation to co-reside with a close matrilateral or affinal kinsman in his hamlet. Such longterm co-residence often leads to factually permanent domiciliary rights in that location so that a man in the next generation can claim rights of residence in a hamlet where his father used to live, even if he is not directly the owner. Coconut trees function as claim markers or testimonies of domiciliary rights. Even if individuals can make claims in a dozen or more locations, there are, of course, limitations and a number of non-social factors that will influence and determine his choice.

One of the main non-social factors determining choice of residence is proximity and accessibility to food gardens. The location of coffee gardens is also an important factor, but only secondary here. Very often people establish their cash crop gardens on primary land, if possible in the vicinity of the road and near a stream, where the processing of coffee takes place. Whenever feasible, the people will live as closely as possible to their food

gardens. In many cases people also own small bush camps where they have a yam storage house and where, during intensive periods of work, they sometimes stay for several days or even weeks. Some of these camps are old residential sites that are kept trim. Another incentive for setting up residence in a specific area is the safeguarding of land claims. This is especially the case where an area has been left fallow for maybe twenty years or more. The danger exists that ownership claims might become vague in people's memories and that a third party with a less valid title might step forward and lay claim to a part of the territory. Such a usurper might, in the end, not stand a chance of putting his claims through but a land dispute can be a prolonged affair, with the consequence that the disputed territory is barred for use for both parties. One method of forestalling such a development is to mark one's claims by setting up residence in the area in question. Such motivated moves are often encountered in a particular phase of the development cycle of a family, that is when the when the children are nearing adulthood and the time is approaching when they will demand to be shown the land they can claim as estate. Today the tendency to live close to one's food garden is counteracted by the wish of many villagers to live near the road. One of the reasons for this is that people feel more exposed to the threat of sorcery and activities of raskol (robbers and thiefs, criminals in general) when living way out in the bush. Another, equally important, reason is that a large part of social and economic life is centred on the road and the places where the road leads to, such as the school and the Catholic Mission Station, and the people feel that they are missing out on important events in the village if they live secluded. It is also easier for their children to get to school and back.

Women have distinctly less choice of options, not because they do not own land – which a substantial number of them do – or do not inherit coconut trees, but because they are dependent on a male kinsman for house building. But it is not unknown for women to occupy hamlets for themselves and their children. These are either widows who have remained in their husband's hamlet after his death, or co-wives who have set up residence on their own. But generally, single women prefer to live in co-residence with a male kinsman, in the case of unmarried women usually a brother, either classificatory or real, elderly widows with one of their married children.

As I noted above, residential shifts are common. The reasons for moving residence are varied. Sometimes the motives are of a non-social nature. When a living house reaches the end of its days, the occupants might take the opportunity to move to another hamlet simply for a change of environment. But in most cases shifts in residence have more imminent and concrete reasons. Conflict with a co-resident is a very common cause. This need not take the form of open confrontation; more often it is manifest in a latent antagonism until some minor matter, such as a quarrel between the children, offers the pretext for a move. The larger the hamlet, the higher the propensity of such latent antagonism to exist.

Explicit eviction of a resident by the original landowners is rare but faint suggestions or hints in that direction can be understood as a threat of impending eviction and lead to a shift of residence. The small hamlet of Raua was such a case. It was occupied by a man called Selhu with his family. The land actually belonged to a man from Tillenge. This man

started dropping hints in public that he was considering moving to Raua. Selhu understood the message and shifted residence to Warengeme shortly afterwards, under the pretext that the traffic on the road was a danger to his young children. The new house he built was also just next to the road, and his children were no safer than they had been before but through this pre-emptive move Selhu had been able to avoid the humiliation of eviction and thus publicly save face.

The death of a resident or a long lingering illness can also result in people moving to another settlement site. Here, however, the circumstances of the affliction are decisive. Deaths are generally not linked to locality but, sometimes, a chain of ominous events will make people conclude that it has something to do with the place they are residing in and they will move to another hamlet site. Sometimes inhabitants remain at a settlement site because they are obliged to care for an old kinsman or -woman. When he or she dies, they will move out and set up residence elsewhere; in such a case the move is not associated with any possible threat perceived; on the contrary, the people feel relieved that at long last they can move away. Moreover, hamlets generally show a tendency to rapid dissolution when it comes to a serious crisis (death, strife, or accusations of sorcery). Thus, not only single units or segments move away, the site of residence as such is given up and ceases to exist.

NOTES:

[1] The Tok Pisin haus boi is also the common term for the men's ceremonial house, where during certain phases of the ceremonial cycle important ritual paraphernalia are kept but where also young men live for a while after initiation and before re-entering normal village life.

CHAPTER TWO

ON LINEAGES, TOTEMS, AND NAMES

In this chapter I deal with various dimensions of the social taxonomy. It includes a description of the different modes of delineating social categories, of the settlement history of Warengeme, and of the naming system.

In present-day Warengeme, I was able to identify and distinguish between 32 lines of descent. Each one can be traced back to a separate and singular *nengele tuhalmbe* (lit. bone of the ground) or founding ancestor. From the majority I was able to obtain extensive genealogies. Descent is traced through the patriline. For the present purpose, which I could describe as mapping out the framework of the social universe of Warengeme, I shall call these constructs descent categories (Barnard & Good 1984:76) and shall try to avoid the term descent groups since these primarily form conceptual categories at this level and not groups of warm-blooded humans that undertake collective action (Keesing 1975:10, Verdon 1980:139). If we define such assemblies whose members trace their descent from a known ancestor and know the genealogical connections to that ancestor (allowing for genealogical amnesia and telescoping) technically as lineages, then the Warengeme descent categories are lineages, but not necessarily corporate lineages.

The Wam apply two different but interlinked modes of classification of social categories. The first is the *alamel piressi*, or yam classification system (*piressi* is the generic term for yam, *alamel* the term for kin group or family), the second mode refers to the classification by *altakele*, or totems.

CLASSIFICATION BY *ALAMEL PIRESSI*

In theory, each ward is divided into a number of descent categories which are classified and named after the different parts that make up a yam tuber. In the course of fieldwork I came to call this way of classifying the different categories as the MEPTS-system, derived from the initial letters of the different parts: *milmbe*, *ereme*, *petule*, *tineme* and *saharampe*. *Milmbe* is the so called head (of the yam), or the upper or proximal section of the tuber, out of which the vine or stem called *tineme* grows; *petule* is the bottom or distal end, and *ereme* designates the fleshy middle section; *saharampe* the side-shoot which often grows from the head, parallel to the main shoot. Each section is used to designate a single lineage and is called *alamel piressi*, i.e. yam family. The Wam also use the term *alamel* in a different way, namely in the term *alamel sambe* which could be translated as "human family" or "family of man". It can mean the nuclear family, but more often it is used to denote what could be called the kindred or a bilaterally extended group of relatives. The term is very flexible and its meaning depends very much on the context and on the occasion on which it is used.

The yam classification system is linked to specific wards. In theory, each ward has a separate but terminologically identical set of *alamel piressi*: *milmbe*, *ereme*, *petule*, *tineme*, *saharampe*. Somebody is a member of *milmbe* of Talkeneme, or *petule* of Wolhete but the different co-terminous units in the different wards are not related to each other in terms of

the MEPTS-system (although its members, or most, are in terms of kinship), i.e. a *milmbe* of Warengeme has nothing in common with the *milmbe* of the other wards.

In analogy to the five parts which make up a yam tuber, the five sections together constitute a ward. However, the logical deduction one could draw here, namely that wards are yams and that they even possibly carry the names of different yam species, does not apply. Suggestions made in this direction always met with negative answers. It is closer to the point to say that wards behave like yams, or are like yams in an ontological sense. The yam metaphor does not apply so much to the ward as a whole as to the attributed capacity of the cuttings of each segment of a yam to grow into a mature tuber. Just as the "head" of the yam, or some other part, will grow and, in the end, reproduce the entity of which it was once a part, so do human families grow and proliferate. They too come to reproduce the form of which they were once a part.

In Wam gardening practices, in general, not all parts of the tuber are used to the same degree for propagation. Either whole tubers are replanted or, for preference, the distal and proximal ends, *milmbe* and *petule*, are placed back in the ground together after the middle section, *ereme*, has been scraped out and used for consumption. Other combinations are also possible, such as the head and the middle part, or the middle part with the bottom end. But in principle, each part is regarded as a potential tuber in itself, a yam in a nutshell so to speak.

The morphism between the growth of the yam and human reproduction and proliferation was commented on by one informant as follows:

> "With the yam it goes as follows: the *tineme* grows out from the *milmbe*, alright, you cut it off and take *milmbe* and *tineme* and plant them, then you make a further cut, take the middle part *ereme* and go and plant it; if you see that the remaining *petule* is only small, you plant it together with the *ereme*, if it is large enough, you plant *ereme* and *petule* separately. That's how it goes with the yam, and with the humans it is the same."

The relation between the descent categories in a ward corresponds in principle to this analogy. The various categories constitute separate and autonomous units. In a few cases two categories stand in a special relationship to each other, similar to the yam parts that have been replanted together. In Talkeneme the *tineme* is said to grow from the *milmbe* section in the sense that the *tineme* are the descendants of the younger of an ancestral sibling pair, of which the elder is the founder of the *milmbe* lineage. In Wolhete *tineme* is represented by an immigrant lineage that came to reside in the village on the invitation of their ritual partners of *milmbe*, and there exists the notion of a junior-senior relationship. The Ennikineme, i.e. the inhabitants of Enniki, who are *ereme* in the yam classification system, and the *petule* of Wohimbil, although separated today in terms of ward affiliation, still have the notion of belonging together because originally they "stood" together (as if planted together), when Enniki still constituted a ward of its own.

There is no overt ranking within the MEPTS-system, but one does notice a tendency towards a latent hierarchy in the sense that the *milmbe* category is imbued with special status, since it can claim to be the "head" of the yam. It is a notion of ranking similar to that observed between male siblings where all are of equal status but the eldest claims to be

the head of the group and, thus, the person with the most authority in family matters. When village disputes become heated it is not uncommon for a man to attempt to boost his authority by stating "I am from *milmbe* of this ward", inferring that his *milmbe* status lends him more weight and knowledge on the issue being discussed. It is noteworthy that when I began fieldwork and was trying to find out who belonged to which category many an informant claimed *milmbe* status for himself and at the same time denounced the others who did the same as impostors.

Within the other categories, one at times notices the inclination to approach *milmbe* status as far as possible. The *petule* of Wolhete, for instance, maintain that they go together with the *milmbe* of that ward, because they were "placed" in the village at the same time, analogous to the method of planting yam. The *tineme* (lines D1, D2) people of Talkeneme (cf. table 2, p. 56) maintain that they and the *milmbe* (line C, which is on the verge of dying out) are in reality one *alamel* and that they are the potential heirs to the *milmbe* estate (which is, of course, seriously denied by others). One line within *tineme* (D1) has actually already encroached on the denomer *milmbe* and declares itself as such or, on delicate occasions, as *tineme boumbineme*. In biological terms *tineme boumbineme* means that the stem grows from the dead centre (*boumbineme*) of the head of the yam. It is translated into the social taxonomy and used to imply that one, although by designation *tineme*, is actually so close to *milmbe* that one is practically a part of the head of the yam!

It is significant that in both cases where the term *tineme boumbineme* is used, i.e. in the wards of Talkeneme and Warengeme, the corresponding *milmbe* sections have no offspring and are dying out and, at the same time, that the *tineme* are represented by populous families and ambitious men able and ready to head them. In Warengeme ward, in fact, the village magistrate, who is of the *tineme boumbineme* category (line Z), has over the last few years gradually inverted the categories. He today claims to be *milmbe* and has placed the original *milmbe* man (W1), an ageing bachelor, into the *tineme boumbineme* category.

In the whole village there is only one descent category of the *saharampe* class (line B). Today it is quite small and only represented by a few members. But in the past the people of *saharampe* played an important role in the village. It derives its significance from the fact that it is recognized as probably the oldest and most authentic of all the Warengeme lineages. A lot of landed estate is linked to the name *saharampe*. For the other lineages, especially for the immigrant ones, it is an asset to have a *saharampe* ancestress in one's genealogy – to show that one has old matrilateral ties to one of the most authentic Warengeme lineages – for the purpose of legitimizing and consolidating one's position in the village

Unlike other *alamel piressi*, *saharampe* has never been directly associated with one specific ward only. In the past it was affiliated to Wolhete and Enniki wards, today it is, in addition, closely linked to Warengeme ward. The old ward of Enniki was in fact often called Enniki-Saharampe, implying that in reality it was composed of two entities, the actual Enniki *alamel piressi* (lines A1, A2), and *saharampe*.

Just as *milmbe* is flavoured with high status qualities, *ereme* is loaded with negative connotations. It is often applied to designate immigrant lineages. In gardening practices the

Wam seldom replant the middle part of the tuber, preferring the proximal and distal ends, or both together. The middle is credited with little reproductive value and is usually only used for consumption. *Ereme* is translated into Tok Pisin figuratively as namel nating, i.e. nothing but the, or, only the middle part. "It has no head and no arse", the people say. In the ground the belly of the yam tuber gradually grows again, but it grows on and lives off the strength of its two flanking parts, the *milmbe* and the *petule*. The picture from the plant world is translated into the human realm where it is applied to describe the status of immigrants who "grow on" those that give them refuge and provide them with land, women and sago plots.

The term is used in other contexts as well. In the realm of political discourse (usually debates on land and sorcery) *ereme* is applied to describe a dispute which is not based on sound facts and does not yield concrete results but instead goes on beating around the bush endlessly. However, it is used also in a more neutral and less derogatory sense, namely in the classification of siblings. There, *ereme* refers to the intermediate siblings. The eldest brother is called either *milmbe* (head of yam), *erke* (head in general), or *enduho* (the first), the youngest is termed either *somame* (younger) or *pitaineme* (smaller). If there are several intermediate brothers, they are classed together as *ereme*. Only the eldest and the youngest brother are terminologically specifically distinguished.

Let us return to the classification of social categories. There the metaphorical tenet (that *ereme* has no reproductive value) does not correspond to the pattern in reality. Most of the descent categories occupying the *ereme* position in the MEPTS-system are not immigrant lineages at all, but clearly have the status of original Warengeme lines. At the same time, many of the immigrant lineages carry other labels than *ereme*, some of them are not even integrated into the *alamel piressi* system at all.

In Warengeme and Wohimbil wards, and also in the remains of the old Enniki ward, *ereme* descent categories are original lineages, whereas in Wolhete the *ereme* section is an undisputed immigrant line. In Talkeneme matters are more complex, since there are four descent categories, each with a separate founding ancestor, that are classified as *ereme* (cf. table 2, p. 61). Two of them are original Talkeneme lineages (lines G, I), one is a lineage that originated in Wolhete (line F) but later became affiliated to Talkeneme, where it is granted equal status as the other *ereme*, and the fourth is distinctly an immigrant lineage from Selni (D3).

The fact that several terminologically undifferentiated descent categories exist in one ward would fit the system of sibling classification well, where only the eldest and youngest are terminologically distinguished and the intermediate siblings are uniformly classified as *ereme*. But, I fear the matter is more complex. The crux of the problem is that the term *ereme* is polysemous. On various levels of the taxonomy and in different contexts it means different things.

In the MEPTS-system in its "pure" form it denotes the middle section of the yam (or of the human ward), equal to other parts of the yam (on the basis of its potential of self-propagation). In this sense it applies to the relevant descent categories in Warengeme, Wohimbil, and the earlier ward of Enniki. In its figurative sense it designates an immigrant

lineage which is given refuge, sustained and provided with land, women, and resources by members of original lineages. Here the picture is taken from the most common practice of yam growing where the middle section of the yam tuber is removed before replanting and where the *ereme* in the course of time grows again "on" the parts bounding it, i.e. the parts giving it sustenance. In this sense it refers for instance to the *ereme* of Wolhete. In its third sense it refers to the sequential order of siblings, *enduho*, *ereme* and *somame*, as described above.

Applied to Talkeneme this means the following: the *ereme* lineages F, G, I combine two of the three meanings of the term. In the context of the MEPTS-system they are each granted full autonomous *ereme* status, i.e. their members are regarded as original members of Talkeneme ward. At the same time they are also grouped together in the way intermediate siblings are classified. Together they represent the middle section of the ward. The members of the fourth *ereme* category (line D3) bear that label due to their undisputed status as immigrants from Selni. But here we come to the next hurdle. *Ereme* is the label given to them by others, they themselves classify themselves as *tineme*. The "real" *tineme* people contradict this, of course, and maintain that the people in question are only *ereme* of *tineme*! The muddle sorts itself out when one realizes that some of the descent categories segment into subcategories. The *tineme* of Talkeneme is such a category, another is the *saharampe* lineage. Both these categories segment into three closely interlinked, but discrete, descent lines that trace back their genealogical link to an ancestral sibling group. In the case of *saharampe* it is a fictive ancestral sibling group . These subcategories are called *enduho*, *ereme* and *somame*. Literally translated *enduho* means the upper end of the stem (of the yam plant), consequently also the "first" section of the vine to sprout from the tuber, and thus also the first or senior descent line. The plural form *enduholme* the Wam translate as "those that came/come first". *Ereme*, as we know by now, denotes the "middle" of something, in this case the middle or intermediate descent line, whereas *somame* is the term used for younger/junior sibling (*somal* = younger brother, *somauwi* = younger sister) and signifies the third line.

Back to Talkeneme: The ancestor of the lineage that came from Selni was given refuge by the *tineme* people at the time. Firstly, the Selni immigrants are *ereme* on the basis of their immigrant status, but, at the same time, they were incorporated into the taxonomical system where they occupy the intermediate position within the *tineme* subcategories. Which sense of the meaning people are suggesting when they designate the members of this lineage as *ereme* depends very much on the speaker and his intentions, as well as on the context in which the term is used. Although it can have a completely neutral quality, it is most often used in its derogatory sense, meaning an immigrant, and people sometimes revert to it as a subtle instrument of insult and provocation in the field of village politics.

Beside *enduho*, *ereme* and *somame* one encounters two further terms by which subcategories are denominated, these are *eilehe* and *enaha* (pl. *eileheneme* and *enalime*). Basically, *eilehe* is a household device. It is a type of hook which is attached to any

Location name	Alamel piressi	Sublines	Totems	Status
(Wolhete ward)				
	Milmbe (K1, K2)	-	Timbiaha marme	original
	Petule (M)	-	Timbiaha marme	original
Sanihi	Tineme (N)	-	Timbiaha marme	early immi.
	Ereme (J)	-	Timbiaha telgumine	recent immi.
			Timbenau (O)	original
(Talkeneme ward)				
	Milmbe (C)	-	Worei	original
	Tineme (D1)			early immi.
	Tineme (D2)	- enduho		early immi.
		- somame	Worei	early immi.
		- ereme (D3)		recent immi.
	Ereme (F)	-	Timbenau	original
	Ereme (G)	-	?	original
	Ereme (I)	-	Worei	original
	Petule (H)	-	?	original
	Butewanga (E)	- eilehe	Worei	original
		- enaha	Worei	original
(Warengeme ward)				
	Milmbe (W1)	-	?	original
Butelime (W2)	-	-	?	recent immi.
	Ereme (X)	-	Mauweke	original
	Petule (Y)	-	Mauweke	original
	Tineme (Z)	-	Worei	early immi.
(Wohimbil ward)				
"Womsok" (P1)	-	-	Mauweke	recent immi.
	-	-	Worei (P2)	early immi.
	-	enalime (Q)	Mauweke	original
"Bunoho" (R)	-	-	Mauweke	recent immi.
	Petule (S)	-	Worei	original
	Ereme (T)	-	Mauweke	original
"Selnaua" (V)	-	-	Timbenau	recent immi.
	Butewanga (U)	-	Worei	original
(Ward independent)				
Ennikineme	Ereme	- eilehe (A1)	Tambari	original
		- enaha (A2)	Tambari	original
	Saharampe (B)	- enduho	Tambari	original
		- ereme	Tambari	original
		- somame	Tambari	original
Tillenge (L)	-	-	Mauweke	early immi.

Table 2: The Warengeme descent categories

suitable part of the roof construction where the people hang up their implements or tools. Mostly it is used by the women to hang up their limbum. *Enaha* has various meanings. Firstly it means the limbum, a woman's pannier or carrier bag[i], secondly, and analogously

to its Tok Pisin counterpart, it designates the female womb, and thirdly, it describes a special type of net used for trapping pigs.

Translated into the social taxonomy *eilehe* denotes the first, or the senior, line of a descent category, *enaha* generally means the second, or junior, line. More specifically, the descendants of the second wife of the original ancestor are defined as *enaha*, whereas *eilehe* signifies the offspring of the first wife. In scenic form, the Wam describe how a second wife arrives at the hamlet and house of her new husband and hangs up her *enaha* on the *eilehe* of the house. Another interpretation I heard is that *enaha* indicates the descendants of a man who has been adopted into a lineage.

However, in the village, in both descent categories which have this form of subdivision, the relationship between the segments does not comply with the definition of *eilehe/enaha* as given above. The people simply acknowledge that they belong to two different segments of the same *alamel* but do not know exactly how they are related to each other. In the case of the *butewanga* lineage of Talkeneme (Line E), segmentation is shallow and ill-defined and the unity of the two parts is still more pronounced than their disjunction. In the *Ennikineme* lineage the opposite is the case. Although the members of both segments acknowledge a close agnatic link and are on close terms with each other, they are unaware of the exact genealogical connections; *eilehe* and *enaha* classify as discrete and separate descent lines (lines A1, A2).

Table 2 above shows the various descent categories in the village. I have distinguished between four modes of designation: name by location, the *alamel piressi*, the sublines, and the totems. The fifth column shows whether a lineage is of original, early, or recent immigrant status. Not all descent lines are incorporated in the yam classification system. The letters in brackets identify the various lineages and display by which classification they are commonly designated. The term *butewanga* is, strictly speaking, not an *alamel piressi* classification but, for reasons of presentation, I have placed it under this column. In the first column (name by location), the names in quotation marks designate the villages of origin of the lineages concerned (e.g. "Womsok"), whereas the others designate hamlet sites within Warengeme.

CLASSIFICATION BY TOTEMS

The totemic representations are taken from the animal realm, more specifically from the world of birds and snakes. In this sense the Wam do not differ from other cultures in the Torricelli region, and in New Guinea in general. The Wam term for totem is *altakele* which is the generic term for bird. This, however, I suspect as being a back translation of the Tok pisin word pisin (= bird). The people themselves seldom use the word *altakele* but prefer to use *alamel* instead.

The snake totems are specific to the ward of Wolhete, whereas the other kastom ples display a variety of bird totems. In Wolhete people distinguish between three totemic categories: *timbiaha marme* (ground boa, *Candoia aspera*), *timbiaha telgumine* (tree boa, *Candoia carinata*), and an unidentified short snake called *timbenau*. In the other wards one encounters four bird totems: *tambari* (hornbill), *einde* (white cockatoo), *worei* (black cockatoo) and *mauweke* or *mage* (shrike thrush). The same totems are encountered in other

Wam villages, including some others such as *munul* (eagle) or *nembegele* (cassowary), which are not represented in Warengeme. *Worei* is the most common totem and is encountered in all wards except Wolhete, *mauweke* we find in Warengeme and Wohimbil, the same as *einde*, whereas *tambari* is restricted to the few descent categories that are associated with the old ward of Enniki. People often name primary and secondary totems, the latter being the totem by complementary or matrilateral reckoning.

Generally, knowledge of the social taxonomy is very low. When asked to specify their *alamel* the people respond differently. Some spontaneously name their totem, others offer their denomer according to the MEPTS-system first. The members of Wolhete, for instance, are more likely to say that they are from *timbiaha* or *timbenau* than to refer to their classification by yam. Furthermore, whereas all the yam categories have totems, not all totem categories constitute units within the yam classification system. Thus, the *timbenau* lineage (line O) of Wolhete, although reckoned as a "true" and original lineage, is not part of the MEPTS-system, the *timbiaha*, on the other hand, break into *milmbe*, *ereme*, *petule* and *tineme*. The *ereme* sgement of Wolhete (J), which is an immigrant lineage from Selni, is distinguished as *timbiaha telgumine*, whereas *milmbe*, *petule* and *tineme* are *timbiaha marme*.

One descent category (also of "original" status) is quite out of line. Their totem is *worei*, which is nothing extraordinary, but instead of a classification by yam they qualify as *butewanga*. This word means the "calf" or the "lower part of the leg". There are two *butewanga* lineages in the village, one in Talkeneme (E), the other in Wohimbil (U). My hypothesis that *butewanga* might be an extension of the MEPTS-system stemming from the anthropomorphic qualities which are often granted to the long yam (*Dioscorea alata*) was never shared or verified by any of my informants. *Butewanga* has no *alamel piressi*, it was maintained, it stands as a class for itself[2].

Analogous to the *alamel piressi* the various totemic categories in the different wards are not related to each other, i.e. the *worei* of Warengeme have no bonds to their namesake of Talkeneme on the basis of their common totem. Not even in the same ward is this the case. Nor is there any consistency between the categories of the MEPTS-system and certain totems, in the sense that all *milmbe* are *worei* or all *petule* are *mauweke*.

Today, the different totems are distributed heterogeneously over the four wards, but there are indications that, at some earlier stage in the past, totems were associated more consistently with distinct wards. Thus, for instance, *tambari* is closely connected with the old ward of Enniki, *timbiaha marme* was linked traditionally to the previous ward of Almbime, whereas the *timbenau* were centered on Gulime-Wolhete. Wosuheme, which today is only a hamlet on the road to Selni, used to constitute a ward of its own which was associated with the *mauweke* totem. There is a myth fragment which tells the story of how the *mauweke* bird, which lived in the coconut trees in Wosuheme, used to play tricks on humans by imitating their voices, until the men of Wosuheme decided to put an end to this. They bored a hole in a coconut and filled it with poison. The next day the *mauweke* ate from the coconut and noticed too late that it had been tricked. It flew away from Wosuheme and is said to have died in the Ilahita Arapesh area. Wosuheme was raided by

an alliance of Selni and Selnau at some point in the past and its inhabitants were driven off. Today the lineages that bear the *mauweke* totem reside in Warengeme and Wohimbil wards and there is some evidence that these lineages were originally from Wosuheme.

A number of the Warengeme descent categories go unnamed. These include three of the most populous lineages of the village, which are all recent immigrant lines, and one lineage that counts as an early immigrant line. When the need for collective designation arises, which is seldom the case, these lineages call themselves, and are described by others, by their location name, such as Tillenge, Butelime or Sanihi, or else after their principal contemporary figures, such as in the form of "the people of Kani and Gista". Today the Tok pisin version of lain bilong, i.e. the line of, is mostly used. These lineages are not directly integrated into the MEPTS-system but, on occasion, they adopt the classification of the lineage that gave the original immigrant refuge.

In general, the MEPTS names are seldom used, either in everyday usage or in political discourse. The people are often termed by the hamlet name, or more specifically by the name of the principal hamlet they are historically associated with, or otherwise, they are demarcated by a common ancestor or ancestral sibling pair in the form of lain bilong X and Y, meaning the offspring of the two ancestors X and Y. In land disputes, the arguments never run along the line of the yam families, since the *alamel piressi* are not regarded as the principal landowning unit, but along ancestral name lines through which the disputed area is believed to have been transmitted. In fact, many of the inhabitants of Warengeme do not even know their classification, or if they do, they often feign ignorance because it is regarded as a risk to become involved in an argument on an issue where absolute certainty cannot be guaranteed.

The yam classification system is a matter upon which there is little agreement. There are only very few lineages whose classificatory position is absolutely undisputed. *Saharampe* is such a case, and its members belong to one of the exceptional lineages where the people are commonly designated by their *alamel piressi* term. It is not the categories themselves that are the objects of dispute – there is no question of whether there is a *milmbe* in Wolhete – the point is whether the group of people occupying that category are the legitimate title holders. There are no absolute categories, and just as the genealogies are constantly being rearranged and reinterpreted, so the yam categories are frequently the objects of manipulation – demonstrated by the case of the village magistrate of Warengeme who has inverted categories. Between lineages of undisputed original status, matters are taken more easily. It is the immigrant lines, or those over which the suspicion of being immigrants hangs, that are more sensitive to, and aware of, their position within the social taxonomy. Today, the dividing line is not between the different *alamel piressi* as such, and whether one is *milmbe*, *petule* or *tineme*, but whether a man belongs to a descent category which can convincingly claim to be an original line of one of the wards, or whether he is a member of an immigrant lineage. The crucial issue here is the question of landownership and land usage. In earlier times land was lent out for use between families and individuals on a much more liberal basis. But in the face of population growth (which people are very much aware of) and the paramount significance given to cash cropping and the monetary

sector of the economy, today the land usage system has become extremely restrictive and rigid. Landowners are very much more reluctant to part with land for cash crop usage, and if they do, the range of relatives to which land is granted has been narrowed down considerably to include only immediate or very close kin.

The *alamel piressi* are not directly the landowning units; instead the ownership of basic resources such as land, sago and a variety of tree crops is ordered by, and channelled through, the individual naming system, which itself is linked to the MEPTS-system. In theory, each *alamel piressi* owns a number of individual ancestral names, both male and female. With each male name (sometimes also a female name) is associated a tract of land, over which the individual in possession of that specific name, and concomitantly of that tract of land, has the ownership title and also the right of disposal. Normally such names are transmitted through patrifiliation, either to one's own sons or to those of a brother, real or classificatory. But it is also very common to pass on the name to a sister's son, to some other member of one's matrilateral kin, or to a junior ritual partner. The functioning of the system depends on a high degree of flexibility, simply because there are more potential land users than names to go round. I shall be returning to the naming system later on. Suffice it to say at the moment that the immigrant lineages are under severe pressure at present in terms of access to land, because they are at a grave disadvantage in terms of the possession of ancestral names. Frequently immigrants were given land together with the accompanying ancestral names, but more often they and their descendants only held usufructary rights and not the full ownership title. Today many of the donors are retrieving their tracts of land and debarring others from further usage.

THE SETTLEMENT HISTORY OF WARENGEME

I have distinguished between original lineages on the one hand, and early and recent immigrant lines on the other. The Warengeme themselves only differentiate between two categories: original and immigrant, meaning recent immigrants. Going by the genealogies it is very difficult to pinpoint the exact date or time when these different lineages moved to the Warengeme territory. The people merely maintain that some lineages arrived earlier than others. Judging from the various pieces of information I received, a rough estimate could be made that the recent immigrant lines came to the Warengeme area three or four generations ago, and the early immigrant lineages arrived six to seven generations ago. With the exception of two lineages (lineages L and P2) the early immigrant lines have been incorporated into the yam classification system, the recent immigrants, on the other hand, generally do not rank in the MEPTS-system. In the few cases where they do, it is either as *ereme* (e.g. lineage D3), or they use the designation of the lineage that originally gave them refuge – for instance, in the case of the people of lineage P1 who sometimes call themselves *enalime* – or they usurp the yam classification of another lineage, such as the members of lineage W2, who often claim to be *milmbe* of Warengeme.

Of the 32 identifiable patrilines in the village, 19 are original lineages. This is well over 50% of the total number of lineages, but these 19 lines comprise only 232 of the 663 inhabitants. 431 or 65% of the people are descendants of antecedents that at one time immigrated to Warengeme (cf. diagram 1). In principle, the status of immigrant is loaded

with negative connotations. It implies that the people concerned have no natural rights in Warengeme, and that they have been granted settlement rights and such concerning land usage by original inhabitants. Theoretically, they could be expelled from Warengeme territory, but only theoretically . As one old man said of one of the immigrant groups "I could send them back to where they came from, but I can't, they are family now." In the final analysis, the status of immigrant is burdening as it connotes a status of dependency and thus contradicts or comes into conflict with one of the principal values of Wam culture, and that is the autonomy of the individual. However, not all of the 13 immigrant lineages are equally affected. Seven patrilines, totalling 178 persons, are descendants of antecessors who migrated to Warengeme at some very early stage. Nobody would refer to a person of such a lineage as an immigrant, unless he was attempting to provoke, challenge or insult the other. If we count these 178 individuals of the early immigrant lineages factually as original inhabitants and add the number to the 232 truly original inhabitants, it still leaves us with just over 250 people who are assigned to the category of immigrant. That means that close on 40% (37.7%) of the Warengeme inhabitants are reckoned to be of foreign origin.

Chronology, at least in terms of the precise dating we employ when reviewing the past, is of no great importance to the people of Warengeme. It is not the year that something occurred that is significant, but the event itself – the fact that it happened in the first place – and the repercussions the event had in the sequel. In reconstructing the chronology of historical events, such as the settlement history of Warengeme, genealogies, too, are only of limited use, since genealogical telescoping is common. Thus, dates prior to the 1920s are estimates, if not actually guesses, that are based on the chain of subsequent events and genealogical cross-checks. The zero time level in my reconstruction is the latter half of the 19th century. At that point in time, the "village" consisted of six wards: Enniki, Warengeme, Gulime-Wolhete, Almbime, Talkeneme and Wohimbil, although admittedly the status of Wohimbil remains shadowy. The people say Wohimbil is a new ward, distinctly more recent than the other kastom ples of the village. Certainly, Wohimbil did not exist in the same form and composition as it does today but the territory which makes up Wohimbil was certainly inhabited and had a ritual centre of its own. Each of the six wards consisted of a number of lineages, a territory the members of the ward were associated with, and a ceremonial ground on which a ceremonial house stood during initiation and festive cycles. One ward, Talkeneme possessed two such ceremonial grounds which were used in irregular alternation. Later, Wolhete also had two ceremonial grounds.

Enniki, which today is only a hamlet site, be it noted a significant one, was one of the original *aniher sululepeni*. Five lineages were affiliated to Enniki: *milmbe*, *ereme*, *petule*, *butewanga* and *saharampe*. Enniki ward finally split early in this century after a fight on the occasion of a tamberan feast. But already before that event, Enniki had experienced the exodus of a number of its constituent lineages. The first to depart was the *milmbe* lineage, when two brothers, called Pakei and Saraha, shifted residence to Manohu, a settlement site near the Ulambe creek (which is today classed as Wohimbil territory) and then on to Bombossilme, where Pakei died. From there Saraha went on to Hambini, where his

descendants still live today. Approximately at the same time, some people say together with the *milmbe* brothers, a man from the *butewanga* lineage, called Kwandul, also went to stay in Manohu. In the next generation, the lineage disseminated. Kwandul's three sons departed for different destinations. One son set up residence in the area which is now Talkeneme-Simete. He is looked upon as the founder of the *butewanga* lineage (E) in the present Talkeneme ward. The second son migrated to Mambulime, a ward of Selni village, and the third son moved to Albineme, a neighbouring village in the Muhiang Arapesh area. This segment is no longer classed as *butewanga*, just as little as a segment that broke away later and went to reside in Luwaite. *Butewanga* is also still represented in Wohimbil. The members of this segment (line U) are the descendants of a man who came to Manohu at the time the sons of Kwandul were leaving for their different destinations. Agnatic ties between the Talkeneme and Wohimbil segments of *butewanga* are recognized, although there is no awareness of a common founding ancestor, nor do the two segments share common territory.

Of the original *petule* lineage of Enniki, only one segment is left within the Warengeme settlement area. It is represented by one man with his family. Today, *petule* is regarded as a lineage of Wohimbil (line S) after the ancestors of the contemporary *petule* representative broke off ritual relations with Enniki and established new ones with both Wohimbil and Bombossilme. Over the generations *petule* members have also migrated to other villages in the Wam and Urat areas. Historical agnatic ties with the *ereme* lineage of Enniki (A1, A2), the last lineage actually residing in Enniki, are acknowledged, but in ritual and political terms *petule* is a Wohimbil lineage.

As I have already described, *ereme* breaks into two parts called *eilehe* and *enaha*. The members of both segments still reside in Enniki, but they are never called *ereme*, which is their *alamel piressi*, but Ennikineme, meaning "those of Enniki". When Enniki ceased to be a ward of its own, *ereme* ritually split; one half, *enaha* joined Wohimbil, *eilehe* attached itself to Warengeme. Thus, *ereme* has ritual relations to Wohimbil through their *enaha* segment, but socially and politically they clearly are not affiliated to that ward. Before Enniki dissolved, other lines within *ereme* had departed to various villages in the Urat and Muhiang Arapesh areas. Remnants of the *ereme* lineage are to be found in Luwaite, Balif, and Woreli.

Saharampe is the fifth lineage that originally made up Enniki ward. It has always been regarded as a distinct entity of its own. Its members are described as *elbauel*. *Elbauel* is the name of a leaf of a certain type of tree which is said to turn its side according to the wind. The term is translated into its social context to designate a person who is affiliated with more than one ward. Usually he is associated with one kastom ples through filiation and with a second one through ritual association. The name is also applied to whole lineages,

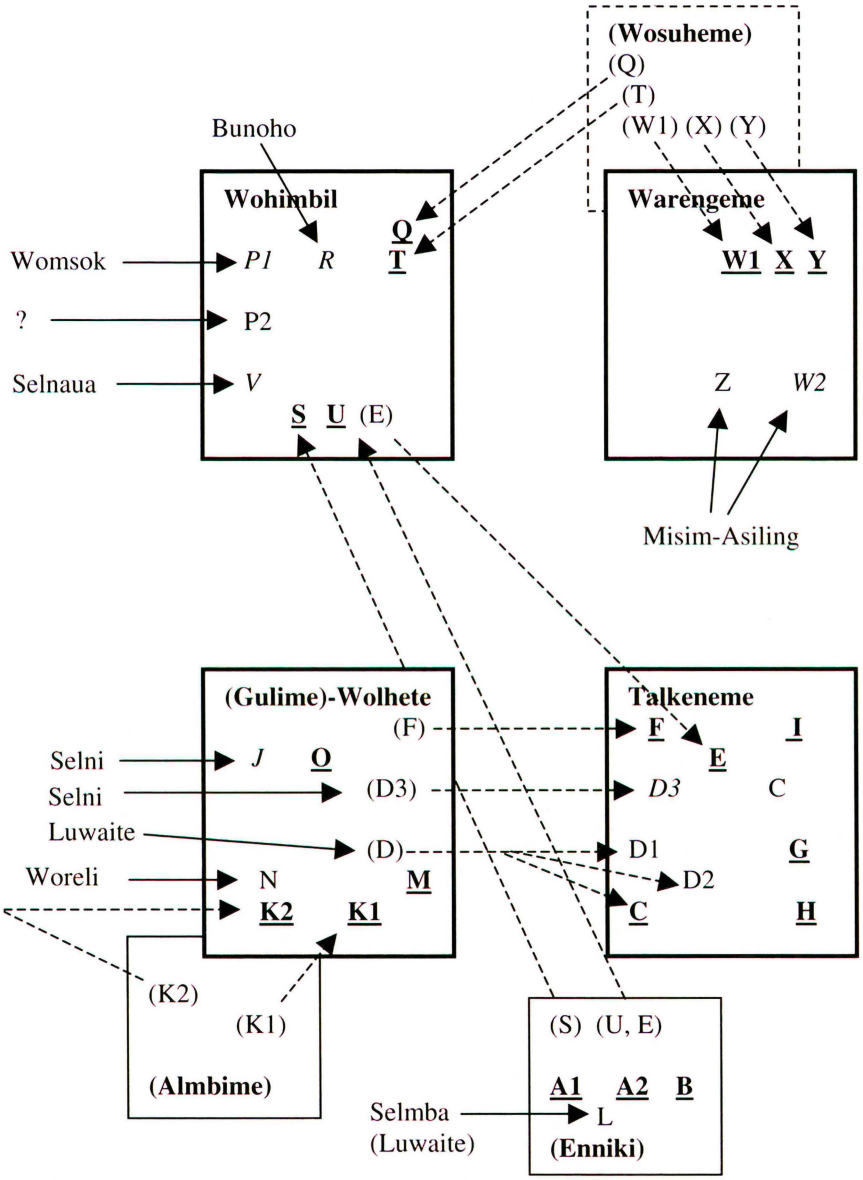

A1=original / L = early immigrant / *D3* = recent immigrant

Diagram 1: Original, early and recent immigrant lineages in Warengeme

and *saharampe* qualifies as such a case. When Enniki broke up, *saharampe* joined Warengeme, without however severing its ties to Wolhete. Both *saharampe* and *ereme* lineages regard themselves as the guardians of the old ward Enniki. Although the ward has ceased to exist, they are assigned a status of their own. The Ennikineme do not, like other lineages, belong socially to one specific ward, although they are ritually affiliated to other kastom ples. They are simply "those of Enniki".

The story of Enniki ward is one of fission and emigration. Groups split off and joined other villages or wards. Other wards have experienced fission as well but on the whole they have seen more incorporation and fusion of immigrant lines.

Almbime ward broke up around the turn of the century, one segment entering into ritual relations with Bana, the other part, consisting of the lineages K1, M, and N, merged with Gulime-Wolhete. Today the ward is simply called Wolhete after the site of the ceremonial ground. Gulime is the hamlet site of the *timbenau* line (O). It was left deserted for a number of decades, after the last remnants of *timbenau* left Warengeme after the war and took up residence in Bana and the neighbouring Muhiang district. In 1987 one man of *timbenau*, a bachelor, returned to the village and set up residence again in Gulime. In earlier times, Gulime-Wolhete acted as a recipient of a number of immigrant lines from different areas. One of them, lineage J, is still resident in Wolhete. Three lineages (D1, D2, and F) broke away from Gulime-Wolhete at one time and are now regarded as part of Talkeneme. Apart from its relocation after the earthquake, Talkeneme has been a stable ward. It has not been marked by fission but rather by incorporation of a number of lineages (D1, D2, D3, E, F).

The history of Warengeme ward has also been one of accretion, and not fission. The origins of the ward in its present location, however, are lost in the mists of time. The members of the original Warengeme lineages claim that they have always resided where they are now. But some older informants (from other wards, be it noted) maintain that the original focal point, i.e. the ceremonial house and ground, of these lineages was located in Wosuheme, on the spur that leads up to the village of Selni, and there are several clues that support this view. At some point prior to our zero level, before the dawn of time so to speak, Wosuheme constituted a fully-fledged *aniher sululepeni* of its own. One day it was attacked and routed by an alliance of Selni and Selnau villages. The inhabitants were driven off and resettled where now the ward of Warengeme is located. The indications that support this hypothesis are the following: 1. Except for the actual hamlet sites on the road between Raua and Warengeme, practically all the land along the main ridge belongs, or at least originally belonged, to people of Wolhete and Enniki; 2. Warengeme ward lies strategically in a disadvantageous position since it is situated in a slight hollow on the main ridge, which suggests that the first inhabitants there were not given the option of choosing a strategically more convenient settlement site; 3. The original Warengeme lineages own much of the land in and around the Wosuheme area; 4. It is said that originally Wosuheme was populated by people affiliated to the *mauweke* totem. The original Warengeme lineages, and some of Wohimbil as well, have the *mauweke* bird as their totem.

Presently Warengeme ward consists of three original lineages (W1, X, and Y) and two immigrant lines (Z and W2). The first of these two immigrant lines, lineage Z, arrived at a very early date and are now factually looked upon as original settlers, the other (W2) arrived at a much later date.

Wohimbil is the most complex and controversial of the present-day wards. It is made up of eight lineages. As a ritual association in its contemporary form it came into existence when Enniki ward broke up, but in some form it existed prior to that event as well. The population that today forms Wohimbil is made up to a very major extent of immigrant lines, i.e. recent immigrants. The *enalime* (line Q) lineage that originally settled in the basin of the Ulambe between Selni mountain and the main Warengeme ridge is represented today by one old woman and is on the verge of dying out. The term *enalime* is the plural form of *enaha*, which suggests as in Enniki that this lineage once formed a segment of a larger descent category. However, no one remembers the history of the *enalime* people and the lineage stands as an entity of its own. The origins of lineage P2 lie in the mists of time as well. It is not incorporated into the yam classification system but at the same time it is certainly not a recent immigrant line. Today it is regarded as a co-lineage of the far more influential and populous lineage P1, who are recent immigrants. But it is certainly of older origin than the P1 lineage. Further, there are three lineages that previously belonged to other wards of what now constitutes Warengeme village: one is the *petule* lineage (S) of the early Enniki ward, the second is the *butewanga* line (U) of the same origin, and the third is a lineage (T) which today classifies as *ereme* of Wohimbil and which most likely originally formed part of the old Wosuheme ward. It is very probable that the *enalime* lineage itself initially belonged to Wosuheme. Well over 80% of the present Wohimbil inhabitants are members of recent immigrant groups.

Some of the early immigrant lineages tend to mask their true status and cover up their origins by creating or propagating fictive ancestral links to Warengeme. The *tineme* people of Talkeneme are such an example (cf. diagram 2 below). Their original link to the village is an ancestress named Boboki. She originally was from Gulime. She went to marry a man called Menihel in Luwaite. After a raid on Luwaite by the men of Misim-Asiling, Menihel and Boboki escaped and returned to the Warengeme area, together with their two sons Atahiaul and Aboti. They were given refuge in Gulime-Wolhete by the people of *timbenau*. Atahiaul shortly afterwards went to settle in Talkeneme. Aboti, the younger brother, had two sons called Takwassi and Paindu. Through initiation, Takwassi was associated with Talkeneme, Paindu with Guilme-Wolhete. At some stage Takwassi and Paindu fought, and Takwassi, being the elder, subsequently claimed the whole landed estate for himself, whereupon Paindu barred his elder brother from the use of their sago patches. As a reaction, the lineage fissioned, and the descendants today reckon themselves to be two closely related, but separate, patrilines (D1 and D2). During the same period, Paindu and a segment of the *timbenau* lineage broke away from Gulime-Wolhete, following a dispute during a *pinandil* feast (a sequence within the tamberan cycle). Paindu moved to the hamlet cluster of Akumeneme-Belkunku which is classed as part of Talkeneme. The *timbenau* splinter group (lineage F) set up residence in Simblondime, which also is a part of

Talkeneme ward. This line has now been reclassified as the *ereme* (the middle of the yam) of Talkeneme. Its members at times, however, still call themselves *timbenau*.

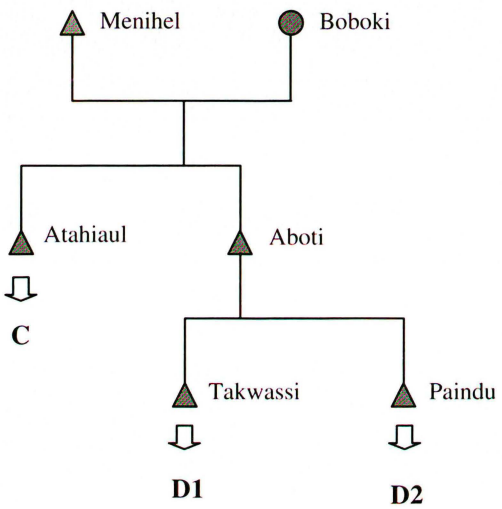

Diagram 2: Descent reckoning in the *milmbe* (C) and *tineme* (D1, D2) lineages of Talkeneme.

In the "official" genealogy of this cluster of descent lines, Atahiaul is regarded as the *nengele tuhalmbe* (bone of the ground), or apical ancestor of the *milmbe* lineage (C) of Talkeneme, whereas in the *tineme* category, Aboti, Takwassi and Paindu are alternatively given as the founders, depending on the context and whether the people concerned wish to emphasize the unity of the lineage, or stress their singularity. The descendants of Takwassi (lineage D1) sometimes also name themselves *tineme boumbineme* in order to distinguish themselves from their co-lineage (D2), who are simply *tineme*. On occasion they even go further and call themselves *milmbe*, in view of the fact that the real *milmbe* lineage (C) is in danger of becoming extinct. The existence of the primal ancestress Boboki is kept in the background and in reserve. In a strict sense, i.e. according to the canons of patrilineal descent, both *milmbe* and *tineme* belong to Luwaite through their male ancestor Menihel. Boboki fulfils a double role. Should ever their status be challenged in Warengeme, which is practically out of the question, she would represent a very important and meaningful matrilateral link to the village but, at the same time, she represents a vital tie to the Luwaite area, where both *tineme* and *milmbe* still have old land claims which they have never forfeited and which today, in the face of threatening land shortage, are gaining again in importance.

As I just mentioned above, nobody would seriously think of questioning the *tineme's* status as an original lineage, but they do face serious challenge in matters of landownership. It is noteworthy that this challenge comes from a co-lineage of the *tineme* people. It is in fact the immigrant lineage from Selni (D3), which arrived no more than

three generations ago in Warengeme and was taken in and given land by the men of *tineme*. They classify as the *ereme* of *tineme*. Since then this line has grown in numbers and now surpasses the actual *tineme* in size. Through genealogical manipulation – an important recent *tineme* ancestor has been relocated to their genealogy – they are making claims on parts of the *tineme* estate. Up till now they have not succeeded, but the dispute has had serious repercussions in other spheres. The strained relationship between the two segments finds its expression in frequent accusations of sorcery.

In Warengeme ward, the *tineme* line (Z) is also such an early immigrant group (in spite of the identical name they have nothing in common with the *tineme* of Talkeneme, nor the *tineme* of Wolhete). They are often classed as *tineme boumbineme*. When designated collectively they are called *enduholme*, which means "those that came first". They mask their foreign origin with the help of an ancestral sibling pair, one of which, Embelemi, their *nengele tuhalmbe*, is said to have resided in Warengeme, the other, who is not named, in Misim (an Urat village to the south-west). Their original settlement site is Tubilme, a hamlet that lies on the path down to the Ulambe creek. Its strategically unfavourable position, as well as the fact that the surrounding tracts of land belong to members of other lineages, strongly suggests that *enduholme* is a patriline of foreign origin. Furthermore, the contradiction remains that if *enduholme* is a "pure" Warengeme lineage, as their members adamantly maintain, why the need for a sibling ancestor in Misim? In contrast to the *tineme* of Talkeneme, who still have land claims in Luwaite, the *enduholme* no longer have valid rights to land in Misim.

Further such early immigrant lines in the village are the *timbiaha telgumine* (originally from Selni, now classified as *ereme* of Wolhete, line J) and the *tineme* lineage (originally from Woreli, line N) in Wolhete, as well as the Tillenge people (originally from Luwaite, line L), which ritually breaks between Wolhete and Talkeneme.

With one exception (lineage P2), Wohimbil ward harbours no such early immigrant groups. It is composed of splinter groups of original lines of Enniki and Wosuheme wards, and the members of three very populous recent immigrant lines. Terminologically these are not clearly designated. They have not been incorporated into the yam classification system, which suggests that they arrived at a later date than other groups. They do, however, tend to adopt and use the names of those lines that originally gave refuge to the first immigrants and provided them alternatively with land and wives and with whom they entered into ritual relationships. The largest kin group at present in the village is an immigrant line (P1), the Womsok lineage, that traces its origin to the Abu-speaking village of Womsok. In everyday usage and in issues of village politics they are simply referred to as "those of Gista and Kani", Gista and Kani being the two most influential men of the lineage at the moment. They themselves, when asked, refer to themselves either as *enalime*, which is the name of the lineage that took in the original immigrant, or *mage*, which is the totem of the *enalime* line. *Enniki Saharampe* is also a term that is used. In this case, the speakers are addressing a significant ancestral matrilateral link, since the son of the man from Womsok who came to Warengeme married a *saharampe* woman called Haitewa.

The second recent immigrant lineage (R) is from the Womsis area to the north. They originally come from a settlement site called Bunoho. Bunoho was raided by an alliance of Selni and Aresili. The inhabitants were driven off and their descendants are now spread over a territory that reaches from the coast to the Wam area. Remnants of the Bunoho people are to be found in Walum, Balup, Suain (to the north of the Wam territory), Selnau and Warengeme. The history of the Bunoho people also forms part of the oral tradition of the people of Womsis (cf. Nekitel 1975:17-18). The ancestor that came to Warengeme was still a child when he arrived. He was taken in by a man called Nembegele of the Womsok lineage (P1). When he came of age, he was incorporated into the original *enalime* lineage, with whom he and his descendants maintained ceremonial relations. The Bunoho line still use land and sago resources handed down to them by the *enalime*. In this respect they compete with the Womsok group, who also have claims on original *enalime* estate, especially now that there is no heir to this original line. Neither Bunoho and Womsok lines today hide the fact that they are suffering from land shortage but, significantly, competition for land is more aggravated between the members of the same lineage than between those of the two separate lines.

Land shortage is also a problem facing the third and last immigrant line (V) in Wohimbil. They have no common designation in the village, at least I never heard one mentioned, either in address or in reference. According to my main informant from this lineage, they had been searching for their place of origin for many years. Finally a man from Selnau disclosed that their ancestors were from Selnaua, which is an old settlement site between the present villages of Selni and Aresili of which the modern Selnau is also an offshoot. Of themselves, the people say today that they are the *milmbe* of Wohimbil but this is not only not confirmed by other villagers of Warengeme but is, in fact, vehemently denied. They were, the informant maintained, in possession of all the necessary knowledge to validate their claims in their place of origin. This knowledge comprises the names of the original ancestor, the *nengele tuhalmbe*, their totem, and the secret name of their *sambigile*, that is the bush spirit that is said to govern their original territory. However, they had been threatened with sorcery by the present owners and had therefore not taken any further steps.

The last of these immigrant lines are the people of Butelime (lineage W2), which is the name of the hamlet where the majority of the line resides. The lineage traces its origins to the Misim Asiling area, to a site called Alumi. They are plagued with the same problem as afflicts the other immigrant lines, that is, they are short of land. Their situation is aggravated by the fact that there is an acrimonious rift between two factions of the lineage. Whilst one part resides in Eimuteneme and has command over sufficient resources, the other lives under crowded circumstances in Butelime. Due to its size, Butelime is exceptional in the village. It is an indication that those concerned have very few options of residence. As in other cases the Butelime lineage was taken in by an original lineage (W1) at the time. This line, the *milmbe* of Warengeme, is today represented by one single individual, an ageing bachelor called Ambito. Ambito is on very close terms with the members of the *tineme* lineage in his ward (Z) through ritual relations. In the conflict

within the Butelime lineage, he clearly sides with the smaller segment living in Eimuteneme, since Butehe, the principal man there, had looked after Ambito's father Nunguhe for many years whilst Ambito himself was "on station". Nunguhe, for his part, had adopted Butehe when Butehe's father died.

THE NAMING SYSTEM

Like other societies, the Wam primarily use personal names to identify and designate persons and to distinguish them from other individuals. As I shall go on to show, names also display other properties and perform other functions. They are used as a mnemonic device (cf. Glasse 1987:205; Franklin 1967:79), they also fulfil an important legal function and, in the final analysis, they represent an additional dimension in the system of lineage classification and social taxonomy.

The term for name in Wam is *nalel*. Names are either male or female, in many cases they are gender neutral, i.e. they can be applied to either men or women. They are either taken from the natural environment and cosmological realm (e.g. Nambisil = water, Ahate = path, Anisi = moon) or the plant and animal world (Ningaha = taro, Hiale = flying fox) or from bodily essences or characteristics (Nimbalme = blood, Ningeri = black skin) or else from personality traits (Nungusi = to itch, to tickle = a bad-tempered person). The majority of people, especially men, own at least two names. Although names are important, name-giving is an informal affair and not accompanied by any form of special ceremony or ritual. A child receives its names from its parents or from some close, usually matrilateral, kinsman or kinswoman. In childhood or youth, people often acquire nicknames which often become their standard names in the course of time.

When people receive two names, one of them is usually more significant than the other. In Tok Pisin, these significant names are generally called nem tumbuna, or ancestral name. In Wam there is no specific term for these ancestral names. The people merely distinguish between *nalel* and *nalel umbore,* i.e the other name. On occasion I did hear the term *nalel tuhalmbe* which means "ground name", but this does not appear to be the generic term but more a circumlocution. I shall be returning to these ancestral names shortly.

The colonial era not only brought new names with it, in the form of Christian names, but also brought changes to the naming system. In the main, this refers to the Western method of designating people by their own or "first" name in combination with that of their father. This method was widely used by labour recruiters and the administration. Although the traditional naming system is still in practice today, the Wam show a preference for new names (especially the younger generation) and mix the two systems freely. Thus a man is called Tembule Nambisil by the traditional system, but in different contexts he appears as either Benjamin Tembule – Benjamin being his baptismal name – or as Ben John Happali. Ben John is his own variation of Benjamin and Happali is the name of his father.

Basically there are no name taboos of any kind. Cryptonyms are reserved for the realm of *sambigile* or bush spirits. Men sometimes speak of, and speak to, their wives by teknonyms (mother of X) but, generally, people choose freely between kin terms and personal names in reference and address. In relations that are governed by respect and deference, one does notice the tendency to use kin terms more frequently, whereas the

usage of personal names is more common between parents and their adolescent or adult children.

A interesting aspect is the naming system as a mnemonic device. Parents often name their children after special events that occurred either at the time of birth or shortly afterwards. Sometimes these are very personal incidents. A child can be called Ningaha (taro) because its mother developed a craving for taro shortly after giving birth, or Nimbalme (blood) because she lost a lot of blood during delivery. But names can also refer to publicly more relevant events. My main informant's second daughter was called Nau, because she was born whilst her father was in seclusion during a *nau* tamberan in the ward of Talkeneme. One man was called Melehei (short yam = *Dioscorea esculenta*), because on the day he was born a ritual yam exchange was taking place. The village magistrate, whose own name Hiale (flying fox) is a reference to the *nambo* tamberan staged in Warengeme in 1935, named one of his daughters "System" because at the time of her birth he was accused of wokim system, i.e. misusing his authority by passing partisan judgements in court. One of his sons is called Sinamu which means "uncooked" or "not yet done", and is a cryptic reference to the *arukwineme* sorcerer's habit of consuming an unborn baby during initiation. Hiale was being accused of sorcery at the time.

In this fashion, incidents and events, some of which are less important, others more significant for village relationships – sorcery accusations for instance are not only meaningful to the persons directly involved but also to the balance of village relations as a whole – are linked to names, which outlive the humans they designate. The events are memorized through the names and these in turn become fixed points in the village almanac.

Within the corpus of indigenous names, some are assigned more significance than others. These are what I have called the ancestral names. They are ancestral in the sense that they have been used in, and passed down through, previous generations. Each lineage or *alamel piressi* owns a set of ancestral names of its own. However, these are not unique, and what counts as an ancestral name in one lineage can be used by other lineages as nem nating, i.e. a normal or insignificant name. For instance, there are four men called Nungusi in the village but only one of them bears his name as an ancestral label. Within the same generation an ancestral name is used only once. Furthermore, in each ward an ancestral name appears only once as such. Thus, the name Tetineme is a property of the *butewanga* lineage of Talkeneme. This means it cannot be used by any other lineage of Talkeneme as an ancestral name. In other wards, however, it can and is used as a significant name, but again only once in each ward. The knowledge of names is very elaborated and the people know accurately which names belong to which lineage and are keenly aware of both the use and the misuse of names. The stealing of names is not uncommon and their manipulation often occurs with the concoction of genealogies.

In each lineage, furthermore, the number of ancestral names is limited. In contrast to the Manambu (Harrison 1982:234) or to the Iatmul (Bateson 1936:222), where each clan has command over a vast range of names, the number of personal names pro lineage in Wam is very limited. There are many more people than there are names to go round. This

is certainly the case today and, according to my informants, it was no different in former times. In most cases they appear in the genealogies but it also frequently happens that a certain name is known to be the ancestral property of a distinct lineage, but its members cannot locate the specific ancestor any longer. Names have precedence over genealogical positions when it comes to identifying and demarcating descent categories.

What makes these ancestral names important is the fact that, in theory, each one is associated with a specific tract of land and the title to that land, namely the land which that specific ancestor is said to have once owned. The same applies to the various types of tree crop resources which together with land make up a person's estate. Further, again in theory, the current bearer of the ancestral name owns the specific tract of land to which his name is connected. In this context the term *nalel tuhalmbe*, which means "ground name", takes on meaning and becomes comprehensible. The lineage corpus of ancestral names not only contains male names but also female ones. Women also have ancestral names, and, on occasion, they also hold titles over land and other forms of estate, but distinctly less often than men.

However – and here we come to the end of the theoretical properties of the system – men bearing ancestral names often do not own the land that is connected to their name, and, vice versa, more than fifty percent of the village men are not in possession of an ancestral name but hold legitimate titles over land all the same. The case in which a man owns both the ancestral name and the land that goes with it is, in fact, more an ideational principle than practical reality. It is the rationale behind the system. Land rights are transmitted from one generation to the next through various channels, and sometimes one does find congruency between the system of landownership and the naming system. But most people – including those with ancestral names – own land or estate in general, to which their name in no way entitles them. What is important in terms of property ownership is that a person knows which ancestral name is connected to the specific part of the estate and, especially, through which predecessors the ownership title has passed down to him, and also on what basis each previous transfer was effected.

In practice, the naming system displays properties similar to those of the share system in a western business enterprise. A person in possession of an ancestral name of a specific lineage is reckoned to be a qualified member of that lineage and accordingly has a right to an (unspecified) share of the lineage estate. Where people are members of a descent category by birth and patrifiliation the issue is of less relevance. But it acquires crucial significance where either individuals switch their lineage allegiance or – the other side of the coin – where part of the lineage estate is alienated (through name bestowal) to a person of another lineage.

A case study will serve as an example here: In 1987 a dispute over a piece of land arose between a man called Einde of lineage V (one of the recent immigrant lines) and Umbaha of the *ereme* of Warengeme ward (lineage X). Both men claimed ownership of the piece of land, but neither of them could convincingly prove the legitimacy of their claim because neither knew the exact history of the piece of land at issue. After several fruitless debates, the district officer or kiap from Dreikikir was called in to mediate. In the ensuing dispute

the puzzle was sorted out with the help of a few village elders (be it noted from other lineages) who, significantly, had also taken part in the previous debates but who, conforming to the Wam maxim of not becoming involved in the affairs of others, had not parted with their full knowledge at the time. The presence of the kiap, which lent the episode weight and formality, changed their attitude. In the end, Umbaha, the meeting concluded, was the rightful owner but, as it turned out, that was not the main result. The central point was the fact that Einde was not a name of lineage V , but of the *ereme* of Warengeme, and this had consequences for those involved.

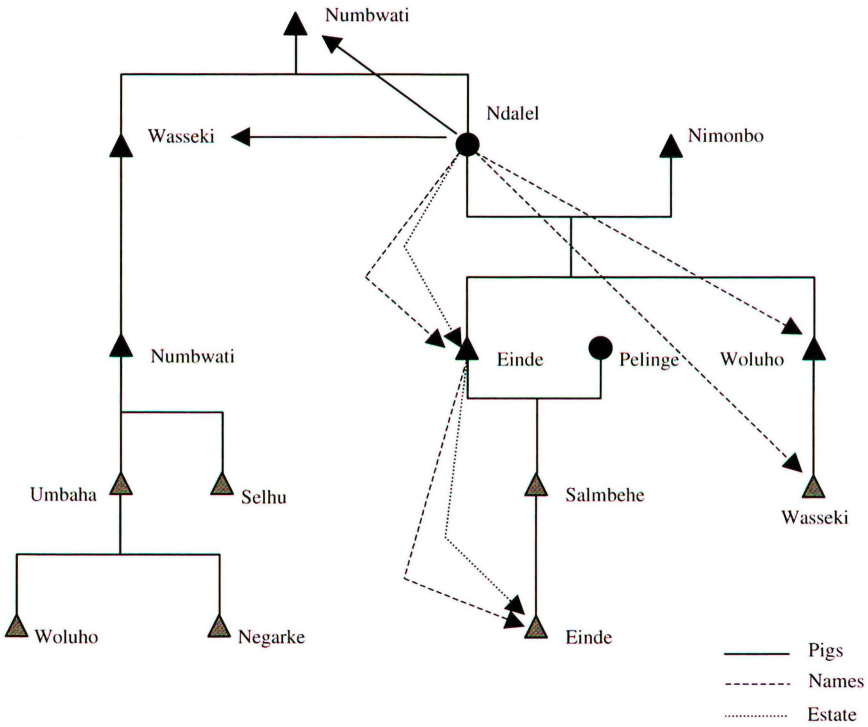

Diagram 3: The transfer of the name Einde from line X to line V.

Four generations ago, a man from lineage V called Nimombo married Ndalel of the *ereme* lineage (cf. diagram 3). Their first child was a son. With the consent of her father Numbwati and her brother Wasseki and in exchange for two pigs, Ndalel bestowed the *ereme* name Einde on her son. When Einde grew up he and his wife used land which he had received together with his name through his mother Ndalel. Wasseki's son, who like his father's father was called Numbwati, is described as a very careless man (he died a few years ago), who paid very little attention to the management of his estate. One of the duties he neglected was to secure the name Einde and retrieve it by forbidding its further use in

lineage V in the following generations. This he failed to do. In old age, Einde bestowed his own name on his son's son, thereby channelling not only the name but also the land rights through his own patriline. At the time, nobody objected. Through his name, Einde thus had a valid claim to a share of the *ereme* estate. The meeting reached the agreement that the disputed tract of land was to be awarded to Umbaha – it was not part of the land that the original Einde had used – but, at the same time, he and his brother Selhu, as the representatives of the *ereme* lineage, were ordered to provide Einde with an adequate share of the lineage land. Einde, for his part, was forbidden to pass on the name to the descending generation.

Shortly afterwards, Umbaha and Selhu were involved in a further dispute with people of the lineage V. This time it involved the man called Wasseki of line V (see diagram). Like his father Woluho and his father's brother Einde, Wasseki had received his name from the woman Ndalel. Woluho left the village to work on "station" at an early age and never returned to the village. Thus, the use of the name Woluho never gave rise to dispute (in the meantime it had been passed on in the *ereme* lineage and was being held by Umbaha's eldest son). After his father's departure, Wasseki was adopted by a man of the *saharampe* lineage (line B) from whom he received land rights. Wasseki, however, retained his given name. Now he was in search of the estate linked to his ancestral name – not for himself but for his eldest son, who was coming of age. He believed that, being the bearer of a name of the *ereme* lineage, he had rights to the land which was linked to the name Wasseki. A mediation was called. In the course of the meeting, however, it became apparent that Wasseki's claims were unfounded; firstly, because the name Wasseki, although used frequently in the *ereme* lineage, was not an ancestral name – there was no land attached to the name – and, secondly, because, even if this had been the case, Wasseki would have had no right to his name, because the two pigs Ndalel had paid to her father and brother had been the exchange for the name of Einde only. She had never consulted her agnates about the other two names but had acted of her own accord instead.

Estate and the corpus of names of a lineage are two entities which are transmitted from one generation to the next. Strictly following the ideational principle, ancestral names and land tracts should be passed on conjointly to the descending generation but, in reality, they seldom are. The two systems are conceptually interrelated but factually disjunct. People inherit names and inherit land (and other resources) but, as I have already said, not necessarily those parts of the estate which their names are associated with (or, of course, vice versa). As a rule, inheritance is patrilineal. Children receive their names from their parents. Given that it is an ancestral name, it usually comes from the corpus of lineage names. First-born children, especially males, are more likely to receive an ancestral name. When they grow up, sons receive land and a share of the tree crops from their father. If the father is dead, the authority and responsibility of dividing the family estate falls to the eldest brother, or else an elder kinsman of the lineage (i.e. a classificatory father to the children) will act as guardian until the children come of age. Such is the stated norm. Daughters also inherit property, not so often land but frequently coconut or other tree crops. Frequently, however, property is transferred through channels other than direct

patrifiliation, and landed estate, tree crops and names are alienated to persons of other lineages.

Generally, female names are given out more liberally than male names because usually there are no titles or rights attached to them. Munembili, for instance, is a name of lineage X, the *ereme* of Warengeme ward, but it is presently being held by a woman of line A1. Munembili's mother gave birth to her in Numbwati's hamlet (the same Numbwati as in the case above), and to commemorate the occasion Numbwati bestowed a name of his lineage on her. In a following generation, the name Munembili will go back to the *ereme* lineage. Staying with the *ereme* lineage: Selhu's daughter is called Permute which is a name of lineage A2. Selhu received permission to use this name from the members of lineage A2. The original Permute was Selhu's father's mother, who came from the A2 lineage. Here, name giving is a gesture of friendship and proximity and fulfils a mnemonic function. Through the name, an old marriage alliance is called back to memory, recorded and reconfirmed.

More significant and legally binding is the custom in which a mother's brother or mother's father presents his sister or daughter with a small gift of sago shortly after delivery and bestows a name of his lineage on the newborn girl (which legally belongs to the husband's lineage). Here the name functions as a claim marker in the sense that the girl is destined to marry back into her mother's lineage later. This is often the case when the mother herself married "free", i.e. when her own marriage was neither based on sister exchange nor on any kind of payment or compensation. Here the daughter is regarded as the exchange of her mother, a form of delayed reciprocity.

Men or boys also frequently receive names from lineages other than their own, but the range from which the name comes is narrower than in the case of girls. On occasion, they are transferred along the lines of friendship and propinquity, but usually they are transmitted from close cross relatives, i.e. matrilateral or affinal kin (from the father's point of view). Structurally these two categories fall into the same class.

What assets are transferred with the name varies from case to case. Primarily it is a matter of negotiation between the two parties involved, i.e. the parents and the name giver, and depends largely on the choice and motives of the person giving the name. These assets can include landed estate and/or tree crop resources in combination with the inheritance of the ritual position of the name giver in the tamberan system, or any single one of these three properties.

The reasons or motives why a man should bestow a name on his sister's son or sister's son's son vary. Firstly, accounting for the basically positive relationship between cross relatives, the act can be an expression of proximity and affection, which itself again strengthens the bonds between the persons involved. The act itself is centred on the name receiver but the meaning or spirit it conveys is directed towards others. Foremost it deepens the bond between the name giver and the father of the child (either his affine or his sister's son), secondly between the name giver and the mother (either his sister, or his sister's son's wife – by the canons of the two-section system, a classificatory daughter of his).

Secondly, name giving can take on the form of compensation or the repayment of debts. The Wam social system is built on the principle of give and take, but the item you give is not necessarily the thing you receive back. Objects of value are substitutable and a name (conjointly with rights to estate) is a suitable medium of exchange to reciprocate something received in the past.

Thirdly, it is a measure for safeguarding property and interests for the future. It is quite common for a man with only one male heir or none at all, but with a substantial estate, to bestow a name on a sister's son or some other close cross relative. The idea behind the strategy here is that, in view of a genealogical bottleneck, he prefers controlled alienation of "shares" of his estate to a relative of his own choosing, rather than risking that others, above all agnates of his, encroach on his property after his death. In the above-described case of Einde, this was one of Numbwati's main motives (he only had one son) when he allowed his sister Ndalel to transfer the name Einde to her husband's lineage. A second case is from the present. It concerns a man called Uhane Anisi from lineage K2. Uhane is the only representative of his descent line. He has three daughters and one son called Wangi. For many years he has been involved in ongoing land disputes with the members of a numerous co-lineage of his (lineage K1), i.e. agnates of his, who are, according to Uhane, trying to lay their hands on Uhane's land. When his wife's brother's wife, who is his classificatory sister, gave birth to a son, it was Uhane who gave him his name. He bestowed on him the name Nuhalangi, which is the name of the apical ancestor (*nengele tuhalmbe*) of his lineage. The reason for doing this, he said, was that he only had one son who would later have to stand up against a strong alliance of envious agnates, all out to take the land from him. Nuhalangi would receive land from Wangi and in return he would support him. Together it would be easier to control and defend the land against their adversaries.

Clearly, naming in Wam is important. It is one of the main means of knotting social ties and creating relationships, or, to be more precise, of making already existing relationships meaningful and giving them content. Whether one uses ancestral or other (insignificant) names for the purpose is in the end of only secondary importance. The emphasis is on the act itself. The fact that some person gives another a name is the significant and creative element. Name bestowal creates a strong bond between the two persons involved (and of course also towards the surrounding actors). How this relationship develops and is sustained over time does not depend on whether the label is ancestral or not, but on how the two individuals manage their relationship and whether it is nursed and kept alive on a reciprocal basis.

Does this mean in the end that ancestral names are not significant after all? It might appear to the reader that over the last few pages I have been deconstructing the naming system and implying that it has no real significance for social organization but that the Wam instead do more or less what they like. But this is not so. It is frequently stressed how important names are and the people point out the suggestive linkage between names on the one hand, and *alamel piressi*, estate and individuals on the other. Names belong to lineages, and above I have, taking the comparison rather far, likened them to shares in a

company. On the one hand, they are treated like value objects in the hands of individuals. They form a part of the immaterial property of the lineage members, where as such they are owned, transferred or bequeathed to a whole range of people. On the other hand, they are also representations of the lineage, and the whole corpus of names encapsulates and identifies the specific descent category, not only its present living members but the lineage through time as a whole. Besides its various functions that I have outlined above, the naming system thus also has a taxonomical dimension. It demarcates and distinguishes the lineage from others on the basis of a set of ancestral names. Names guarantee a lineage's perpetuity in time. They maintain its identity in the face of the continual replacement of its living representatives.

NOTES:

[1] These carrier bags are also, and more commonly, called *luhe* in Wam.

[2] In the neighbouring village of Woreli, which is a linguistic isolate, there is said to be a lineage called *mitehe*, which refers to the upper part of the leg, or "thigh" but the two lineages had no known historical connections. It is possible that *butewanga* and *mitehe* represent the remnants of another, maybe older, form of social taxonomy which uses the parts of the human body.

CHAPTER THREE

ON KINSHIP AND MARRIAGE

The early stages of fieldwork had me rather confused as regards the pattern of kinship terminology, lineage order and rules of exogamy. The reasons for this probably lay in my preconception concerning the basics of the Wam social form, in other words, maybe subconsciously I was expecting the Wam to be equipped with neatly bounded, exogamic, descent groups, as many of their neighbouring groups appear to have. The misconception was reinforced during the first week or so during which time the people I asked confirmed that they reckoned descent in patrilineal terms ("we follow our fathers"), that the men of the same *alamel piressi* addressed each other as "brothers", and that marriage within one's own lineage was forbidden.

I became increasingly suspicious of this view when it became apparent that the people used primary kin terms (M,F,B,Z,D,S) to address, and to refer to, one another far beyond the boundaries of the lineage and where no genealogical links seemed to exist, and that exogamic rules pertained to a much larger range of people than merely lineage members. At first I thought that I had got my descent categories wrong and that the *alamel piressi* were only segments of much larger categories. But this trail of thought did not lead anywhere. After further puzzles and muddles I was finally ready to accept that the Wam probably had a slightly different foundation for their social order than did surrounding groups such as, for instance, the Arapesh (Tuzin 1977:105), Abelam (Kaberry 1940/41:251), or Gawanga (Obrist 1992:53-58).

RELATIONSHIP TERMINOLOGY

The basis of Wam society is a "simple" two-section system of kinship, based on a system of bilateral cross-cousin marriage. But it is "simple" only in appearance. The Wam distinguish conceptually and differentiate terminologically between two categories of kin which I call cross and parallel kin, following the common usage in classifying cousins[1]. In Murdock's terms (1949:223) the Wam have an Iroquois system of relationship terminology, with bifurcate merging in the first ascending generation. Cross kin constitute the category of "marriageable people". This category contains both the class of affinal kin and those from the "mother's side", i.e. the class reckoned through complementary filiation, the mother's brothers, father's sisters and their descendants. Parallel cousins are equated with, and addressed by, the same terms as siblings; cross cousins are terminologically distinguished (cf. Diagram 4 below).

My next step was to find out how this two-section system was compatible with the lineage system. I listed all identified descent lines and compiled a matrix, musing that if the members of the one lineage addressed those of a second lineage by parallel terms, and the members of a third lineage by cross terms, then those of the second lineage would also call those of the third one cross. In other words, if A and B were parallel, and A and C were cross, then B and C must be cross as well. Needless to say, this neat little scheme did not fit the facts. There were so many irregularities to the matrix – so many cases where two

lineages were cross where, by the logic of the system, they should have been parallel, and vice-versa – that it became apparent that I was not dealing with fixed marriage moieties at the lineage level.

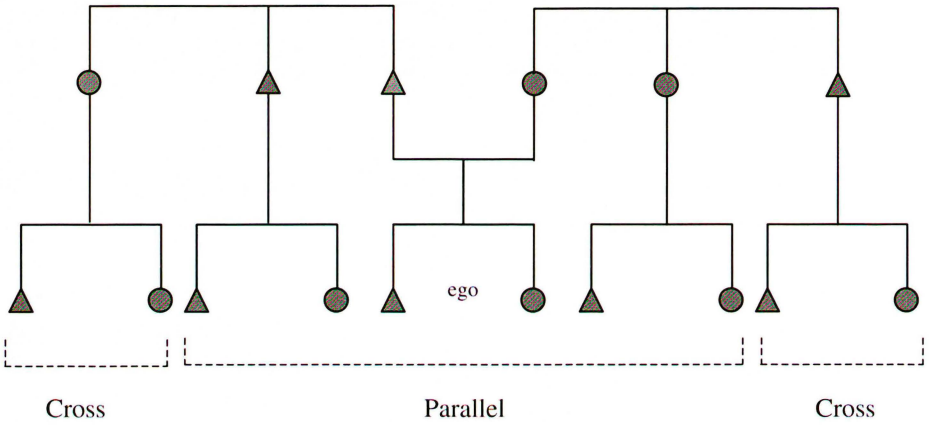

Diagram 4: Parallel and cross kin

However, the cross/parallel distinction does exist and dictates a moiety system but the dual division is not lineage focused, but centred on the individual instead. Each individual lives in, conceptualizes, and experiences the social universe in terms of a dual division and distinguishes between cross and parallel kin from his (or her) own personal perspective. The division dictates the basic propositions of the stated marriage rules and demarcates the exogamic boundaries. Nominally, marriage is possible under three conditions: if two people are of the opposite sex, if they belong to the same genealogical generation, and if they stand in a cross relationship to each other.

As I hope to show later on, the irregularities in the system are a result of the frequency and flexibility with which the Wam bypass the marriage prescriptions and marry into the "wrong" category. The ease with which this happens points to the weakness of the lineages as corporate groups and the high degree of choice and optation left to the individual.

All kin terms are used in a classificatory manner, and there is no distinction made between distant and close kin within each category. Further, there is no distinction made between terms of reference and address, just as the people are, with a few notable exceptions, free to choose between personal names and kin terms when addressing each other. The kin terms are shown below in table 3.

	Male speaker	Female speaker
Father (F)	Agel	agel
Mother (M)	Ni	ni
Brother (B)	Nauwie	nauwie
Elder Brother (eB)	Hurineme	hurineme
Young. Brother (yB)	Somal	somal
Sister (Z)	Numandi	numandi
Elder Sister (eZ)	Erhumo	erhumo
Young. Sister (yZ)	Somauwi	somauwi
Son (S)	Ningal	ningal
Daughter (D)	Ningauwi	ningauwi
Wife (W)	Elmessie	-
Husband (H)	-	raminei
FF/MF	Mal	mal
FM/MM	Mai	mai
SS/DS	Palel	palel
SD/DD	Palei	palei
MB	Agel anheil/ Agel hauneil	agel anheil/ agel hauneil
FZ	ni ananei/ ni suminei	ni ananei/ ni suminei
MBS	Meinheil	raminei
MBD	Elmessie	kwalinei
ZS	Ningal anheil/ ning. messineil	ningal
ZD	Ningauwi Ananei/messinei	ningauwi
BS	Ningal	ningal anheil/ ning. messineil
BD	Ningauwi	ningauwi ananei/messinei

Table 3: Relationship Terminology

The list presented above represents the sum of all Wam kin terms in the technical sense. I have not included the metaphorical terms sometimes used between cross kin which are important in certain contexts and have explanatory value. In the following, I present a list of specifications and equations with reference to the variables of generation and cross/parallel status. The use of Tok Pisin terms has become more and more fashionable in everyday usage and I shall include them as I proceed.

Parallel/+1 generation

Father: *agel* (TP papa)

Mother: *ni* (TP mama)

Agel and *ni* are used to designate males and females in the first ascending generation. They are applied to designate one's own biological parents but are also extended to a large

range of persons beyond the limits of the family and lineage. The critical issue is that the path of reckoning – the linkage between ego and the person designated – only contains parallel kin and no cross-sibling relation in any of the ascending generations. Thus, for instance father's sister is a member of your own lineage but she is classified as a cross relation because of the brother-sister link. The equations, which can be extended indefinitely, thus are the following:

F = FB = FFBS = FFFBSS = FFFFBSSS etc.

M = MZ = MMZD = MMMZDD = MMMMZDDD etc.

Parallel/-1 generation

children: *ningandil* (TP pikinini)

Son: *ningal* (TP pikinini man)

Daughter: *ningauwi* (TP pikinini meri)

The position here is similar to that in the first ascending generation. A man calls not only his own son and daughter *ningal* and *ningauwi* respectively, but also all those children of men he calls "brother" and women he calls "wife". To a woman, the children of women she calls "sister" and men she calls "husband" are *ningal/ningauwi*. The children of a man she calls "brother", however, are cross kin to her, i.e. *anheil* or *ananei*.

Male speaker:	Female speaker:
S = BS = FBSS = MZSS	S = ZS = MZDS = FBDS
D = BD = FBSD = MZSD	D = ZD = MZDD = FBDD

Cross/+1 generation

Mother's brother: *agel anheil/hauneil* (TP papa kantre)

Father's sister: *ni ananei/suminei* (TP mama kantre)

This class of kin is one of great significance in Wam social relations. Through the logic of bilateral cross-cousin marriage, mother's brothers and father's sisters are not only the next to closest kin in the first ascending generation, but also the prospective parents-in-law, i.e. the parents of the cross cousins one marries. The terms *agel anheil* and *ni ananei* cover both possible statuses, the affinal relationship and the one through complementary filiation, whereas *agel hauneil* and *ni suminei* are applied in a very much more restricted sense and used to designate the actual mother's brother(s) and father's sister(s). The equations are the following (for both male and female speakers):

MB = FZH = FMBS = MFBS = FFZS = MMZS

FZ = MBW = FMZD = FFBD = MFZD = MMBD

cross/-1 generation

Sister's son (m.s.)/ brother's son (f.s.): *ningal anheil/messineil* (TP pikinini kantre man)

Sister's daughter (m.s.)/brother's daughter (f.s.): *ningauwi ananei/messinei* (TP pikinini kantre meri)

Here the same applies as above: the terms *ningal anheil* and *ningauwi ananei* include both the status of son/daughter-in-law and that of sister's son/daughter. *Anheil* and *ananei* are the more common terms, they are used reciprocally between MBs and ZSs. *Ningal messineil/ningauwi messinei* are again reserved for actual sister's sons/daughters (or BS/BD for females). Today, *anheil* and *ananei* are increasingly being replaced by the TP term kantre, which again is reciprocally used. One also hears the term kus or kas (pronounced as in English "bus"), which men use to address male cross kin in general. Its etymology is unclear, but I believe it is an abbreviation of the English term "cousin", which is itself gradually finding its way into the village from the towns. Here the equations are:

male speaker:	female speaker:
ZS = FBDS = MZDS = FZSS	BS = FBSS = MZSS = FZDS
ZD = FBDD = MZDD = FZSD	BD = FBSD = MZSD = FZDD

Parallel/same generation

Brother: *nauwie* (TP brata)

eB: *hurineme* (bikpela b.), yB: *somal* (liklik b.)

Sister: *numandi* (TP susa)

eZ: *erhumo* (TP bikpela s.), yZ: *somauwi* (liklik s.)

Nauwie is used frequently, whereas *numandi* is never used in address but only in reference and in composite form as *ningal numandi* or *ningandil numandi*, i.e. sister's son or sister's children. Siblings constitute a decisive class of kin, as I shall try to show later on. It is significant that the class of kin which in ideational terms conveys the notion of equality and a higher degree of shared identity than any other class of kin displays an inherent hierarchical element in the sense that a distinction is made between "younger" and "elder". There is no generic term for "sibling" as such, which includes both cross- and parallel-sex siblings but only two sets of terms to distinguish between "elder siblings" and "younger siblings". These are *peterime/somantime* and *umbwahinerime/pitaikirime*. The equations for siblings are the following:

B = FBS = MZS = FFBSS = MMZDS etc.

Z = FBD = MZD = FFBSD = MMZDD etc.

In the classificatory usage of sibling terms, the determinating factor whether one addresses somebody as "elder" or "younger" is not absolute age but the relationship of the

linking siblings in the preceding generation: eB = FeBS = MeZS or yZ = FyBD = MyZD etc.

Cross/same generation

The class of cross cousins constitutes the class of marriageable persons. For males, all the females in this class are designated as *elmessie* (wife, TP meri) irrespective of whether they are married or not. *Raminei* (husband, TP man) is the equivalent term females use to call their male cross cousins. Male cross cousins use *meinheil* to address and refer to each other (TP tambu), the female equivalent is *kwalinei* (TP tambu). Thus, the equations are:

For *elmessie*: W = BW = WZ = MBD = FZD = MMBDD = FFZSD
For *raminei*: H = ZH = HB = MBS = FZS = MMBDS = FFZSS
For *meinheil*: WB = ZH = MBS = FZS = MMBDS = FFZSS
For *kwalinei*: HZ = BW = MBD = FZD = MMBDD = FFZSD

Although *raminei* is the correct technical term for "husband", it is seldom used in address. A wife and other female cross cousins usually address their male counterparts by their personal name or by the term *samb'umo* which means "my man". *Sambenei'mo* is the equivalent for men, but it is only rarely used, *elmessie* being preferred. Between men, *samb'umo* is used as a term of affection in the meaning of "my friend". Co-wives (nominally classificatory sisters) address each other as *lenenei*, except if they are real sisters, in which case they use *erhumo* and *somauwi* respectively.

In the +2 and -2 generations, the level of "grandchildren" and "grandparents", the terminological distinction between cross and parallel is no longer made. The term for males in the second ascending generation is *mal*, that for females is *mai*, children in the second descending generation are called *palel* (males) and *palei* (females).

In the further ascending generations, the Wam use different terms to distinguish between ancestral levels. Ancestors of the third ascending generation are called *melauwa* (pl. *melewapeke*) which is the term for "crocodile"[2]. *Lauwate mahate* (roots of a tree) is the term for all the ancestral generations between the *melauwa* level and the apical ancestral level. The founding ancestor of a lineage is called *nengele tuhalmbe* which means literally the "bone of the ground".

In classificatory terms and in reference to the changes between cross and parallel kin through the generations, the critical relationship is that between cross-sex siblings, i.e. between brothers and sisters. Sisters are a contradictory and vexing category of kin. A sister belongs to the parallel category and is a member of the same lineage as her brother – the offspring of the same mother and father – but she herself generates descendants who not only are classified as members of another lineage, but also fall into the opposite kin category. In this sense sisters are the opposite of mothers, since mothers go through the reverse process: they come from a different lineage of which they remain members all their life, but they "produce" parallel kin and lineage mates. In terms of cultural understanding, however, sisters are very much likened to mothers.

Sets of parallel siblings, either a pair of brothers or two sisters, generate parallel kin in the next generation, and the subsequent generations will keep on doing so as long as gender relationship remains constant. A cross-sex sibling pair, on the other hand, generates opposed kin categories. The diagram below shows the development through five generations of such an original cross-sex sibling group. Keeping one descent line constant, but alternating the second, we can observe the permutations of the relationship in each consecutive generation between the two lines. After four generations we have gone through the full cycle and return to the original configuration where we have a brother and a sister.

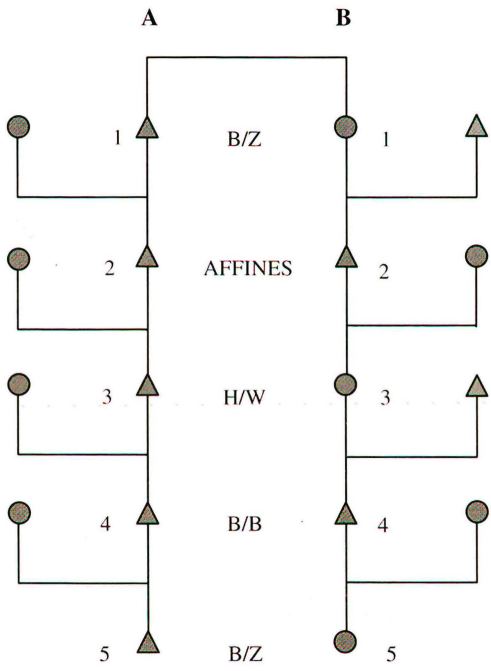

Diagram 5: Permutations of cross and parallel kin

In the diagram, A1 and B1 are siblings and call each other *somauwi* and *hurineme*. In the next generation A2 and B2 stand in a cross relationship and address each other as *meinheil*. A2 refers to B2 so, because he his FZS, B2 to A2 because he is MBS. A3 and B3 call each other *elmessie* (W) and *raminei* (H), irrespective of whether they actually marry or not. They are cross cousins and to both of them the males in the ascending generation in the cross line are *anheil* (A3-B2; B3-A2). The children of a husband and wife are logically siblings, so A4 and B4 call each other *hurineme* and *somal* respectively. In the fourth generation we have come full circle, we are back to a sibling relationship, and the process

starts to repeat itself again in the fifth generation with the original brother-sister relationship.

FORMS OF MARRIAGE

The paradigm of all Wam marriages is that of a cross-cousin marriage in the form of direct sister exchange: two men standing in a *meinheil* relationship with each other exchange their sisters, as shown below in diagram 6. The descendants of such a form of marriage stand in an identical relationship to each other as their parents, and, theoretically they and their own descendants can keep up this form of marriage relationship indefinitely. In reality, however, this does not occur. Although the members of two lineages often regard each other as traditional marriage partners, we do not encounter marriages between the same lineages in more than two consecutive generations. The range of sisters that stand at a man's disposal for marriage is also limited. It is only one's full sister that one exchanges for a wife, and not just any classificatory sister. Here, the exceptions confirm the rule.

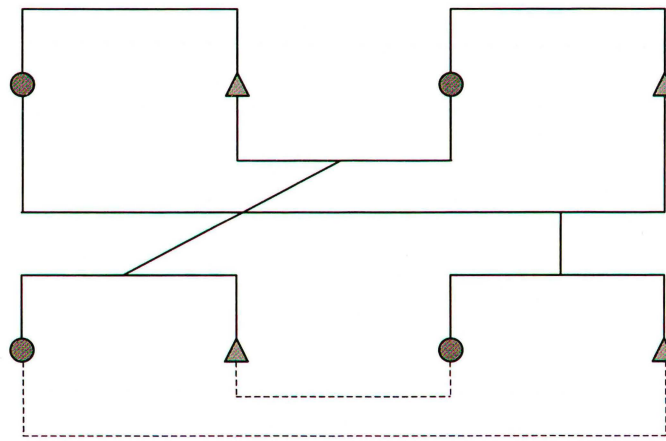

Diagram 6: Cross-cousin-sister exchange marriage

Before continuing, I must make two qualifications. Firstly, the term sister exchange implies a passive role and an object-like status on the part of the sisters engaged in the marriage. Among the Wam, however, this is not the case. Although women generally are regarded as subordinate to men, women have a lot to say in marriage affairs and they enjoy a high degree of autonomy and freedom of choice. Without her consent, a man cannot marry off his sister in exchange for a wife. Women play an equally active part in the arrangement of marriage.

Secondly, although one comes across evidence of this form of marriage in each generation, sister exchange has more the character of a model upon which the people conceptualize and rationalize other forms of marriage, and towards which marital unions

are generally orientated. Even today, when marriage has become completely monetarized, sister exchange still functions as a *leitmotif* and it is always the first arrangement actors attempt to reach in marriage negotiations. In traditional times this was no different. This is partly due to the above-mentioned fact of the active role of women in marriage; secondly, given the higher rate of infant and childhood mortality, the larger intervals in child spacing and other demographic imponderables (e.g. sex ratio in siblings), "pure" sister exchange could hardly be a valid and sustainable form of marriage.

Comparing modern with historical times, one man commented as follows: "Concerning our way of marriage, today we have the law, we have a government and we follow the law, and we either buy our women or we have an exchange, but before, in the custom way, we had to make an exchange. If a sister went to marry some man, then an exchange had to be made." The "exchange" the man talks of was ideally in the form of a sister, but two other forms were equally valid and notably more frequent. The first is a form of delayed exchange, as shown below (diagram 7).

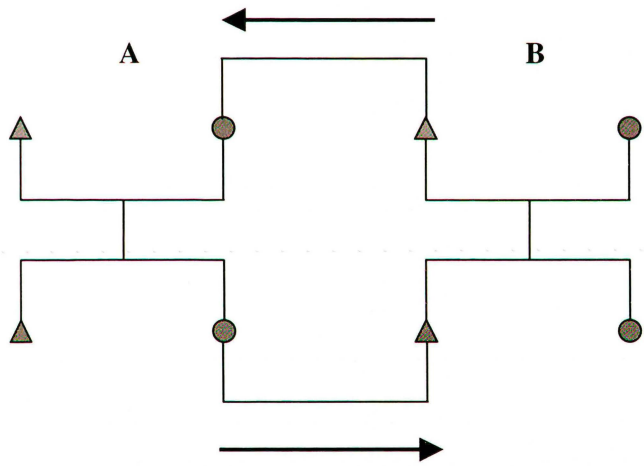

Diagram 7: "Filling mother's hole" marriage

In this form, described as "filling mother's hole" a sister's daughter marries back to her mother's natal kin group, thus restoring the balance between the two families again. Here the daughter is the exchange for the mother, but the conceptual point of reference still remains the form of sister exchange. Both segments involved in the transaction gave away a sister and received a wife in her place. One could say that this form of marriage is once removed from the ideal. The second form, twice removed so to speak, is the one involving the exchange of valuables.

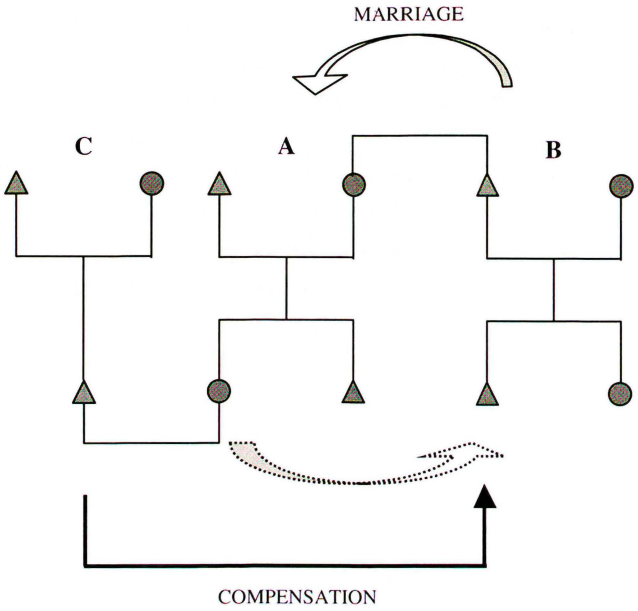

Diagram 8: *alnde erke* marriage

The term bride wealth here would be rather misleading, since the prestations are usually not made to the wife-giving group but, instead, compensation is paid by the husband to the segment that has a rightful claim to the woman and back into which she should have married. According to the rules of delayed marriage, the daughter of A should have married back into B in exchange for the sister from B whom A received in the previous generation. She, however, marries into C whereupon C is obliged to pay compensation to the men of B.

The name of this type of marriage is *alnde erke*, which is translated today into Tok Pisin as baim meri = buying a wife/woman. Literally it means "to get the head" (*alnde* = to get, receive; *erke* = head). *Elmessie erke* (head woman/wife) is the term for a widow. In connection with marriage and women, the term *erke* more generally takes on the meaning of "given away", "allocated" or "forfeited". Traditionally the Wam say, this mode of marriage was applied in two situations. Either when, as described above, a daughter failed to return to her mother's natal lineage and married somewhere else instead, and secondly, in the case of widow remarriage if the widow did not remarry a brother of the deceased husband. The levirate was generally a common practice, the sororate, on the other hand, was very much less common. The right to claim a sister of a deceased woman was only valid if the wife died young, either shortly before marriage or shortly after moving to her husband but without yet having given birth. It is important to keep in mind that both the delayed form of marriage as well as the *alnde erke* type are actually variations of a basic theme or *leitmotif*, and that is sister exchange.

The cross/parallel distinction and the rules of kinship lay down the exogamic boundary quite clearly and dictate whom one can marry and who is out-of-bounds. Marriage is between cross cousins. However, the Wam themselves do not adhere strictly to their own prescriptions. Frequently men and women marry who stand in a relationship other than that of cross cousinship. The range of such "wrong" marriages (TP kranki marit) is wide and includes (from the men's point of view) the categories sisters, mothers, daughters, father's sisters and sister's daughters. The rules of exogamy, strictly, only pertain to the women of one's own lineage, the immediate matrilateral parallel kin (real MZs and MZDs) and immediate cross kin in the first ascending and descending generations (real FZs and ZDs). The exceptions encountered here confirm the rule. This liberal interpretation of the marriage rules is not a modern phenomenon and not an effect of social change. Evidence from the genealogies shows that in traditional times "wrong" marriages were equally frequent. The Wam, in fact, say that their ancestors had no rules at all and "took any woman" they wanted, but this is certainly an exaggeration and reflects more the present contempt or disdain for everything traditional and linked to kastom.

It is difficult to quantify exactly the extent of these "wrong" marriages but, if pressed to name a percentage, I should say something over 30%. The difficulty stems from the fact that positions on the kin chart are ambiguous. Often individuals can fall back on alternative modes of defining their position within the overall terminological system. They can trace their position in relation to one another either through their father's or their mother's line of filiation. Strictly following the logic of the two-section system, they would arrive at the same position through either channel, but because "wrong" marriages warp the system, and have been doing so since time immemorial, individuals are equipped with alternatives for tracing their position on the social map. This in turn facilitates the manipulation of kin categories and generational affiliation. As one man said when asked about his "wrong" marriage: "It is true, through my father's line I would really call my wife *ni* (M), but through my mother's line she is *elmessie* to me." By switching his affiliation to his mother's line for this purpose, he could marry her. The ease with which the marriage rules are bypassed is an indication of the weakness of the lineages as corporate groups. In earlier times, people recount, such unions could lead to a brief period of dissension between the wife's brothers and the husband's group and her brothers would attempt to retrieve her by force maybe several times but after a short while the conflict would be resolved by the payment of compensation or by the arrangement of an exchange marriage. Today the husband is often charged a higher "bride price" in order to compensate for the nominal irregularity. Overall, however, such marriages are accepted as a fact. They constitute significant events that have structural implications which people accommodate to and around which they interpret the new configuration and renegotiate the terms of the relationship pattern.

For a man there are five possibilities of marrying wrongly: he can either marry someone he calls *ni* (M), *ningauwi* (D), *erhumo/somauwi* (Z), *ni ananei* (FZ) or *ningauwi ananei* (ZD). The five categories fall into two classificatorily similar sets: on the one hand, marriage to an M or a D, on the other hand, to a Z, a FZ or a ZD. The two sets have

different structural ramifications. The marriage to a "mother" or a "daughter" will alter the generational affiliation of the persons involved and that of their descendants but will retain the existing cross/parallel distinction. In the case of a marriage to a person with the status of *ni*, the husband is "lifted up" a generation. For instance, his nominal *agel anheil* (MBs) become his *meinheil*, and original mother's sisters are reclassified as *elmessie*, i.e. wives. Usually this terminological reorientation is restricted to the wife's immediate family and possibly to a few close classificatory sisters, but it is not extended to all the other members and families of her lineage. In the case of a marriage to a *ningauwi*, i.e. to a daughter, we have the same process, but in the opposite direction.

The second set refers to a marriage to either a sister, a father's sister or a sister's daughter. Such a union causes notably more disruption to the established cross/parallel pattern. It transforms categories. For those involved and their descendants, cross become parallel kin and vice-versa. In the case of a sister marriage the categories are switched but the generational affiliation remains the same; but in a marriage to a *ni ananei* or a *ningauwi ananei* both variables change. The diagram below explores the ramifications of an FZ-marriage, seen from the point of view of the husband himself (ego A) in relation to a set of patrilateral (cum-affinal) kin, and from the point of view of ego A's son (ego B) in relation to the same persons.

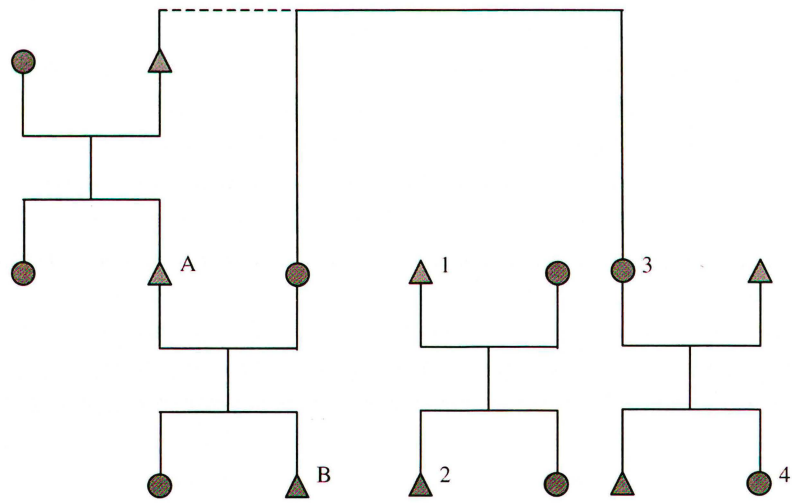

Diagram 9: The ramifications of an FZ-marriage

The brackets show the terms the two egos would use under normal circumstances.

ego A to 1: (FB = F = *agel*) WB = *meinheil*
to 2: (FBS = B = *somal*) WBS = *ningal anheil*

to 3: (FZ = ni *ananei*) WZ = W = *elmessie*
to 4: (FZD = W = *elmessie*) WZD = D = *ningauwi*

ego B to 1: (FFB = FF = *mal*) MB = *agel anheil*
to 2: (FFBS = F = *agel*) MBS = *meinheil*
to 3: (FFZ = *mai*) MZ = M = *ni*
to 4: (FFZD = M = *ni*) MZD = Z = *somauwi*

The changes become evident through the diagram. Both the generational filiation and the categorical order are altered. Father's fathers become mother's brothers, fathers become affines, mothers become sisters and brothers become sister's sons, to name only a few of the transformations. However, at least for the descending generation, such a transformation is not an inevitable process and it is just as likely that the children will retain their old terminological usage towards their matrilateral kin, or at least towards some of them. It merely follows that they become equipped with a potential alternative mode of tracing their linkage to these specific relatives. Which mode they will apply in the end depends on a number of factors, such as the age difference between the actors involved and the quality or closeness of the actual existing relationship between the two groups.

The incidence of such a partially warped marriage system and the ramifications derived therefrom, highlights three sets of issues which are significant for the mode of functioning of the social system as a whole. The first is that there is a high degree of optation open to people in respect of the use of kin terms. The relationship towards specific kin is not necessarily predestined by the genealogical connection and the allocation to a fixed kin category; rather it is ambiguous in many cases, and it is up to the persons involved to come to terms with each other and decide how they will in future address each other and behave towards each other. It follows, secondly, that a high degree of terminological heterogeneity prevails, and that people of the same lineage do not necessarily have identical linkages to members of other descent lines. This is, of course, the reason why the cross/parallel matrix I attempted to compile between the lineages produced no conclusive results. Thirdly, this type of terminological splitting, where men (and women) of one lineage have disparate relationship patterns towards the members of other lineages, also has its effect on the issue of the unity of the lineage. It is a problem for lineages to act corporately in relation to other lineages because their members are linked to those of each other in a variety of ways. To some, those of the other lineage will stand in a cross relationship, for others, they will be fathers and brothers. Given that cross relatives are regarded as an altogether different category of people from parallels, and that the cultural codes prescribe a different kind of behaviour towards this category from that shown towards brothers and fathers, it follows that the lineage is an ineffective operative unit. It would be wrong, however, to describe the Wam kinship order as being one of random choice with practically no consistency.

Ranking by generation is an overall important principle in the ordering of social relationships. Elders, in general, have authority over juniors, no matter what their exact relationship status is. Through the warped marriage system this order often becomes

distorted, so that individuals of different age groups frequently find themselves on the same genealogical level. In part, these distortions correct themselves by the same means of a "wrong marriage", for instance if an earlier "mother-marriage" is offset by a "daughter marriage" in the next generation. But in many cases it is left up to the people themselves to correct these imbalances. They do this by drawing upon the options terminological splitting offers them, and trace their linkage to the person in question through alternative routes, with the aim of achieving a correspondence between factual age and genealogical ranking. Usually this poses no real problems, but at times the Wam go to great lengths to achieve this and perform acrobatic feats of kinship reckoning in the process. The following example is such a case.

Mahaite Ningaha is a man something over fifty, Colin is a boy of about eight years of age, only a little older than Mahaite's eldest grandchild. Nominally, the two should call each other *meinheil* (male cross cousin) since Mahaite uses *anheil* (MB) to address Colin's father, who himself, however, is actually younger than Mahaite. In view of the difference in age and status this would be preposterous, and, in fact, Mahaite calls Colin *palel* (grandchild). The path of reasoning, however, is complicated and leads via Mahaite's wife Haitewa. Angubo, Colin's mother, and Haitewa are lineage sisters, but because Angubo's father married a daughter from his own lineage (a woman Haitewa also calls sister) and begot Angubo, Haitewa also can call her daughter (ZD). Thus Haitewa calls Colin ZDS = *palel*. Mahaite has in turn taken over this usage, which reflects the difference in actual age, and also calls Colin *palel*. Mahaite's own adult children should nominally call Colin *anheil* (FFZS = MB), but they make the same detour as their father so that the relationship is inverted and Colin for his part calls them *anheil/ananei* instead. Thus the terminological pattern reflects the actual age relations.

Such manipulations are performed quite often. But it is not invariably so, and there are just as many cases where the contradictions are left standing. As a general rule one could say that where the actual relations through residence, genealogy, and everyday interaction are close, such adjustments are made, but where the people in effect have little to do with each other and the relationship is a more nominal one, the contradictions are left standing.

Drawing upon one last case, I should like to exemplify a point I made above concerning the "unity of the lineage" and the implications the warped marriage system and terminological splitting have in relation to the notion of lineage corporateness. Wam lineages display a very low degree of corporateness in relation to other entities of the same type. Neither do they see themselves as being "all One" nor do they operate as an "undifferentiated unit vis-à-vis outsiders" (Keesing 1975:17). On the contrary, individual differentiation is high and, with the exception of unmarried, full parallel-sex siblings, no two lineage mates will have an identical rapport to the other members of the social universe. Each individual is equipped with a slightly different terminological viewpoint and stands in a different relationship to the members of other lineages. Whereas some will address a person as *agel*, his lineage brother might well call him *meinheil* or *ningal anheil*. Given the difference in relationship quality between cross and parallel kin it follows that

the members of a lineage will find it difficult to agree upon a common and unified relationship policy towards outsiders.

The four senior men of the Enniki lineage are called Mahaite, Selmbia, Numbia and Katio. The former two belong to the *eilehe*, the latter two to the *enaha* segment of the lineage. They are all *nauwie* to each other, and address one another as *hurineme* or *somal* respectively. Numbia and Katio are full brothers. In the table below I have grouped them together because they have virtually an identical relationship pattern. One could expect the terminological correspondence to be higher within the segments than between them, but this is not necessarily the case. The table displays the status of each man towards the members of two other lineages, and the terms they use to designate these individuals. The first group are members of the *milmbe* of Wolhete (lineage K1), the second are from the lineage V of Wohimbil. I have encoded the internal relationship pattern of these two reference groups by taking the two seniors, Semberehel and Salmbehe respectively, as "fathers" = F.

	A. Mahaite	B. Selmbia	C. Numbia/Katio
1. Semberehel (F)	Agel	agel	agel
2. Butehe (FW)	somauwi elmessie	erhumo elmessie	erhumo elmessie
3. Karis (S)	Ningal	somal	ningal
4. Niamo (D)	Ningauwi	somauwi	ningauwi
5. Nungehembe (FB)	Meinheil	agel	agel
6. Watiel (FBW)	Ni	ni	ni
7. Salmbehe (F)	somal	hurineme	meinheil
8. Pelinge (FW)	elmessie somauwi	ni	ni
9. Patrick (S)	ningal	ningal	ningal anheil
10.Ahate (D)	ningauwi	ningauwi	ningauwi ananei

Table 4: The differential relationship terminology of the men of Enniki.

I cannot comment on all the connections in the matrix but will restrict myself to only a few of the more significant relations. A, B and C have an identical rapport in two cases: towards (1), whom they call *agel* and towards (6), whom they all call *ni*. Here the overall correspondence ends already, even if on the surface the terminological pattern appears to be sometimes similar. Thus, A, B and C all call (2) by a combination of "sister-wife", but they do this for different reasons and by a different reasoning. In Mahaite's (A) case the sister term *somauwi* has a genealogical foundation, for B and C the woman Butehe is a sister, *erhumo*, in a more fictive sense.

To Numbia and Katio (C), Butehe is a (real) father's sister's daughter. That means she is a cross cousin and falls into the category of *elmessie*. However, she is very much older than the two brothers – she could in fact be their mother – and, therefore, she in effect falls out of the range of marriageable persons. Furthermore, she is already married, to a person Numbia and Katio call *agel*. Thus her age and her status position give her a different standing towards the two brothers than normally an *elmessie* would command. They are

expected to show restraint and respect towards her, very much in the same way, in fact, as they treat an elder kinswoman, such as a *ni* (M) or an elder sister, *erhumo*. The term they apply to designate Butehe *erhumo-elmessie* combines all the aspects of their relationship towards her, and resolves the contradiction between taxonomical position and expected behaviour. Her categorical status rules out her being called mother, but at the same time the age difference forbids a normal *elmessie* status. As an *erhumo* she remains on the generational level her taxonomical status dictates, but at the same time she is attributed the degree of respect that her seniority demands. In C's relation to Butehe's children (3) and (4), her cross cousin, or *elmessie*, status prevails. This is shown by the fact that Numbia and Katio, although similar in age as (3) and (4), call them *ningal* (S) and *ningauwi* (D).

Selmbia is in a slightly different position. He nominally should call Butehe *ni* but since he married a half-sister of hers, she becomes an *elmessie*, following the rules of classification (WZ = W). He also calls her *erhumo-elmessie* for the same reasons as Numbia and Katio do. She is much older and, despite her *elmessie* classification, non-marriageable. Her children, however, he calls *somal* (yB) and *somauwi* (yZ), in correspondence to what he calls their father (1) and what he nominally should call Butehe (*ni*).

Mahaite (A) should call Butehe (2) *somauwi* through their genealogical linkage. Since he too married a classificatory sister of hers he calls her *elmessie* but, because he belongs to the same age group as Butehe, the *elmessie* is not only a classificatory label but also his term of address for her. Her *elmessie* status has precedence over the genealogical mode of reckoning. This also becomes evident through the fact that he calls her children (3) and (4) *ningal* (S) and *ningauwi* (D).

More significant at present for the question of the unity of the lineage is the relationship pattern between the Enniki men and their counterparts in the two reference groups. All of them call Semberehel (1) *agel* (F), but whereas B and C use the same term to designate Semberehel's brother Nungehembe (5), Mahaite uses the term *meinheil* (male cross cousin/affine). This differing usage has its roots in a "wrong" marriage that lies a few generations back. The terminological change not only involves a generational shift but also a switch from parallel to cross. In the other reference group, lineage V, A and B are congruent in their relation to Salmbehe (7), they both use a form of brother, but C address him as *meinheil*. Moreover, as can be seen from the terms for (9) and (10), this different pattern is transferred to the next generation. The same is true (but not shown here) for A, B and C's relation to the offspring of (5) and (6) and correspondingly also to A, B and C's own offspring's relationship to these individuals.

The lineage is split in its relations to outside units, and this of course has its ramifications for the political order and system in the village. In a setting where the internal consistency of the lineages is low and their members are split in terms of outside allegiances, the political system is not likely to be based on the lineage as an operative unit.

NOTES:

[1] The terms parallel and cross originally go back to Lowie (1928). For a further discussion on the issue cf. Kay 1965; Tyler 1966.

[2] In the present physical setting this term appears unusual since there are no rivers, or lakes, or sea in the vicinity where one normally finds crocodiles. It could be a reference to the possibility that at some very early stage in the past the Wam settled nearer to the sea or to one of the larger rivers in the wider area.

CHAPTER FOUR

RITUAL ORGANIZATION

Wam culture finds its most dense form of expression in the secret male cult, called *sulu*, today more frequently referred to by the Wam themselves, their neighbouring groups and the anthropologists by the Tok Pisin term tamberan. As a cult system the tamberan is practised over an extensive area of the Sepik foothills, reaching in a wide arch from the Boikin in the east (Gesch 1985) down to the Kwoma on the Sepik river around Ambunti (Bowden 1983). The tamberan appears in different variations in the diverse cultures but they all centre on the basic themes of birth and death, natural and human fertility, growth, strength and knowledge, and maleness and femaleness. The cult circumscribes and pervades all domains of social life and cultural experience, or least it did so in bygone days. The tamberan probably reached its most elaborate form, its highest complexity, and its greatest artistic refinement among the Abelam people (Forge 1967, Hauser-Schäublin 1989) and among certain Arapesh groups, such as the Ilahita (Tuzin 1980). Compared with the ceremonial elaboration and artistic embellishment among these groups, the Wam tamberan appears to have been a more modest or rudimentary affair, which is not to suggest that it was culturally less relevant or less meaningful. The Wam maintain – as probably do all the other groups as well – that they were the "inventors" of the tamberan and that all the other groups copied them. Above, I say "appear to have been" because today the secret male cult has largely been discarded and been replaced by new forms of knowledge, religiosity, and value orientations. The tamberan is no longer actively practised – at least not at the moment – but the legacy of the tamberan lingers on, and flows strongly into the perception and organization of the socio-cultural process. The tamberan was always a harsh regime but today the people actually fear it. It is negatively connoted, strongly associated with the past and kastom, and is seen as being contradictory to the demands of the present, to development, and to the notion of kommuniti. People were reluctant to part with information concerning the tamberan in general, and its ceremonial and secret contents in particular, partly because it is associated with the complex of sorcery, partly because the men wanted to present themselves as modern and forward-looking, and not as adhering to the past with its flavour of ignorance and superstition. I do not deal with the tamberan in full since this would go well beyond the scope of the this study. In the present chapter I concentrate mainly on the organizational and temporal aspects of the ritual system.

In essence, the tamberan is based on the ward organization and a complex, multilayered, dual division, in which, in prolonged cycles, the two moieties initiate each other's members into the various stages of the cult. Secrecy is one of the pivotal issues in the cult system, and women, children, and uninitiated men were strictly barred from experiencing what went on in the tamberan. Sanctions were ruthless and trespassers were, in theory, killed by the men immediately or disposed of by sorcery.

The cult consists of three separate stages, which are usually referred to as the different *sulu*: They are called *nau*, *nambo*, and *kwal*. Ranking exists only in relation to *kwal*. *Kwal*

is the highest grade, it is often called the "old tamberan" and is regarded as extremely dangerous and potent. It is reserved for older, tamberan experienced, men who have either passed through the *nau* and *nambo* stages, or at least, one of the two. *nau* and *Nambo* are conceptually held apart, they deal with different cultural issues, but they rank as equal. Neophytes enter the cult system either through *nambo* or *nau*.

In principal, each ward with its two moieties constitutes an entity in itself, in which the men of the two ritual halves consecutively initiate each other into the various grades. The basic order is as follows: men of moiety A "give" (i.e. initiate into) the men of moiety B *nau*, whereupon B reciprocates by "giving" A *nambo*; this is followed in a next stage by A "giving" B *kwal*, which is returned in the form of *nau* to A, whereupon A "gives" *nambo* to B and, later, B "gives" *kwal* back to A. After this the process repeats itself.

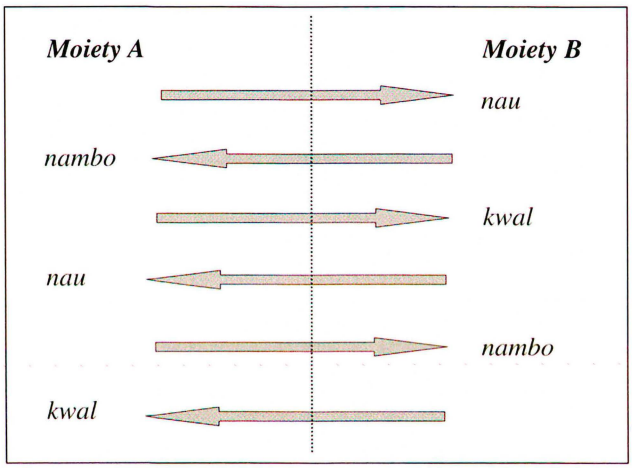

Table 5: The sequential order of the different tamberan stages

The logic of the system is quite straightforward but there are a number of procedural impediments which have significant ramifications for ritual integration beyond the immediate ward level. The first concerns the *kwal* stage and the restriction that new initiates cannot enter the cult system through *kwal*, but only through *nau* or *nambo*. It follows that boys or young men on the verge of their entry into the system have to be channelled to neighbouring wards if it happens that the next initiation in their natal ward should be one to the *kwal* stage. The second impediment refers to the extremely long duration of each single cycle of a tamberan stage. Between initiations in a ward to a specific stage often a period of twenty years or more elapsed[1]. Thus, for instance in the ward of Warengeme a large so-called *pinandil* feast was staged around 1965/66. These exchange feasts are performed to finally conclude a full tamberan cycle. In this case the feast was staged to mark the ending of a *nambo* cycle which had begun with an initiation back in 1935!

The last full initiation held in the village was a *nau* tamberan, which was held in Talkeneme ward around 1960. The ritual debts resulting from this event are still open. In the other three wards initiation to the *nau* grade goes back beyond memory. The last *nambo* to be held was in 1935 and involved the wards of Warengeme and Wohimbil. Officially it was a Warengeme affair, but since a substantial number of men from Wohimbil were initiated into *nambo* at the same time, it is today registered as having been a joint enterprise. In Talkeneme the last *nambo* goes back to approximately 1930, whilst Wolhete is said to have staged a *nambo* tamberan a number of years prior to Talkeneme. No living person has ever experienced a *kwal* tamberan in the village. In Talkeneme it is remembered that a *kwal* was held a decade or more before the arrival of the white man in the area, which would place it at some time around the turn of the century. In Wolhete and Warengeme the people knew that a *kwal* had been held at one time in the past but it lies far beyond memory, whilst in Wohimbil, being a relatively new ward, no *kwal* has ever been staged.

	Talkeneme	Warengeme	Wolhete	Wohimbil
Nau	1960	-	-	-
Nambo	1930	1935	1925	1935
Kwal	1900	-	-	Never

Table 6: Past tamberan initiations in Warengeme

The actual period of initiation and ceremonies of re-entry after seclusion is a matter only of months. The explanation for the long duration of each cycle lies in the fact that countless obligations of reciprocation have to be fulfilled in the months and years after actual initiation. During seclusion the initiate is fed – actually fattened would be a more precise term – with culturally valuable foodstuffs, primarily yam and pork. This is one of the main aspects of seclusion. The food is procured by the initiate's exchange partner, or *pinandil*, who, however, does not produce it all himself but relies on a large number of supporters of his moiety from the other wards though, notably, also from a large number of neighbouring villages. After initiation is over, the initiates first present their *pinandil* with a large food prestation in repayment for the nurturance they received during seclusion. Then they, in cooperation with their own supporters and also with the help of their *pinandil*, begin paying off all the ritual debts that have accumulated, first to those donors from the neighbouring wards, later to the other villages. Although, traditionally, large quantities of surplus food were produced, capacities were limited and repayment therefore took place in stages, over numerous seasons and years. In addition, it must be taken into account that the men of a ward were not only engaged in their own initiation cycles but logically also in the tamberan events of other wards and villages, this time in the role of food donors. This, of course, meant an added burden of time, energy and resources. The result of this was an intricate network of reciprocal dependencies which not only included the immediate village but spanned a wide area. Thus, the men from Warengeme took part in the tamberan cycles of villages of the Muhiang, Bumbita, Urat, Kombio, and even Gawanga areas[2].

As mentioned at the outset, the basis of ritual organization is a dual division which not only relates to each specific ward but pertains to the whole village and goes beyond to include the neighbouring villages as well. Men of different villages know of each other whether they belong to the same moiety or to the opposite half. The moieties as such go unnamed. The members of the same half refer to themselves as *perengele isili* (Tok Pisin wan spia = one, or the same, spear) whilst the opposite moiety are termed *pinantime* (sing. *pinandil*). The term *pinandil* appears in four different but related connections. Firstly, *pinandil* is the term used to designate a special type of ceremonial mast which is erected on the occasion of the large exchange feasts which are staged to conclude a ceremonial cycle. Secondly, the feast itself is called *serengel pinandil*, i.e. the feast of the *pinandil*, thirdly, the ritual units responsible for the erection of this mast are called also *serengel pinandil*, and fourthly, *pinandil* refers to a person's ritual exchange partner.

The two ritual halves consist of numerous dyadic sets of exchange relationships. Nominally, each man has a *pinandil* or kawas as he is called in Tok Pisin. Often individuals have more than one kawas from different wards, this being especially true of the bigmen. In theory, ritual positions are passed down through the line of patrifiliation, but in practice patrilineal succession is only one of several, equally valid, modes of transmission. Frequently ritual positions are transferred through the naming system irrespective of lineage affiliation; they are passed down via cross-kin links, notably from *agel anheil* to *ningal anheil* (MB to ZS) in view of demographic bottlenecks; women occasionally hold ritual positions for deceased or absent brothers, in which case it is often the husband who meets the ritual obligations and who then passes the position down to his own successors. New ritual ties are established with comparative ease, especially on the event of exchange feasts and initiations, and old ones are, under some circumstances, severed. It is quite common for individuals to change moiety affiliation when a numerical imbalance between the moieties emerges. Several older men reported having switched from one half to the other several times during their lives. Widow re-marriage was also a frequent means by which ritual positions were shifted. Such a union usually entailed that the new husband not only took over the wife of the deceased person but also his ritual obligations.

Further in theory, some *alamel piressi* are said to split in half where the lineage siblings kawas with each other[3]. This especially refers to those lineages which include a distinction between *eilehe* and *enaha* sections, such as the Enniki lineage (A1, A2), the *butewanga* (line E) of Talkeneme, or the *petule* of Warengeme (line Y). In practice, however, evidence does not uphold the notion. In Wolhete, men of lineages who share the same totemic category (*timbiaha*) kawas with each other. This refers to the men of *milmbe* (K1,K2) who have ritual ties to the *ereme* (line J), and again the *milmbe* (only K1) who kawas with the *tineme* (line N). However, the men of these lineages also entertain ritual relations to other segments.

Like the other taxonomical categories, ritual organization displays a high degree of flexibility. Here we witness the evidence of the duality of structure, in the sense that the versatility in organization is both the medium and the outcome of the individual's claim to

autonomy. The effective order is established through, and in the instantiation of, interaction by consciously acting social actors. The organization and staging of the events has precedence over ordinal categories. Specific relationship patterns emerge, and are ordered, through the enactment of events and it is the experience of this enactment which lends the relationships their signification and their meaningfulness.

The versatility of ritual organization was sustained and fuelled by the continual migratory flow in the village, both the emigration of resident groups and the immigration of new ones. Ritual allocation constituted one important aspect of the integration of newcomers. Frequently they were allotted land and other resources by resident people in exchange for ritual allegiance. Sometimes, in fact, an already existing ritual link to the village was the reason for the shift of residence in the first place. Thus, for instance, the *tineme* of Wolhete (line N), who originally resided in Woreli, came to Wolhete following an invitation by the men of the *milmbe* section of that ward who were their kawas.

What also contributed to this flexibility of ritual organization was the infrequency of initiations. Due to the rarity of initiations in each ward, young men and boys were often channelled into the ritual system of a neighbouring ward or village in order to be initiated, and became ritual members of that specific ward. As a consequence, a considerable number of men in Warengeme are known as what is termed bruk lain in Tok Pisin, or *elbauel* in Wam. As the term bruk lain implies (broken line), these men are ritually split, or in other words, they ritually participate in two wards, their ward of origin, where they either have a kawas of their own or function as a ritual supporter of someone else, and the ward in which they were initiated. *Elbauel* is the name of the leaf of a specific tree which has the habit of turning upside down in accordance with the direction of the wind and when rain is expected.

The basic order of ritual organization is one of dual division but it does not merely involve simple cleavage into two halves. The duality is multilayered, with the various layers cross-cutting each other. The division is three-dimensional. The first dimension concerns the two unnamed moieties referred to above, the second dimension involves two ritual units which go by the name of *pengame* and *ambuli*, and the third dimension refers to even smaller ritual groups called *serengel pinandil*. Each *serengel pinandil* contains a number of ritual dyads, that is, sets of ritual partners. The *pengame/ambuli* division grows out of the third dimension, so I will begin with a description of the *serengel pinandil*.

The *serengel pinandil* cross-cut moiety division. It groups together sets of otherwise ritually opposed kawas (A and B) into named units: A_1, A_2, A_3 + B_1, B_2, B_3 together form a *serengel pinandil*. In each ward there are several such named sets of *pinandil*. Some of the names repeat themselves in different wards and share common properties but they are recognized as separate units and do not share a notion of affinity on the basis of their common name. The four wards show a total of 18 *serengel pinandil*. These are distributed as follows:

Warengeme	Wohimbil	Talkeneme	Wolhete
Woluho	*Almbu*	*Ihele**	*Lohumi**
*Ihele**	*Elbange**	*Serkauwi*	*Serawoi*
Wari	*Seleholi*	*Landihilaua*	*Elbange I**
*Ingilauwa**	*Ilhal*	*Lohumi**	*Elbange II**
	*Ingilauwa**		*Kauwemi*

Table 7: The *serengel pinandil* in the four wards of Warengeme. The units followed by an asterisk (*) are represented in more than one ward.

These *serengel pinandil* refer to various and distinct sets of sacred trumpets. The generic term for such a set of trumpets is *landuhe sinime*. The members of each *serengel pinandil* rank as owners of the instruments and the specific song or piece of music which goes with each specific set and which breaks into many parts. The people know the scores and tunes of each *serengel* but the right to play the songs belongs to the members of the specific group. During performances the instruments are either played inside the ceremonial house or on the ceremonial ground, in which case women and children turn their backs to the players, holding up *limbum* or strips of cloth behind their heads in order to block any view of the men playing the trumpets. It is not the voice of tamberan which is regarded as dangerous but the sight of the men playing the secret instruments. In contrast to all the other ritual objects involved in the tamberan (ceremonial house, slit gongs, decorations, etc.) which are left to wither away after each cycle, the trumpets are durable objects which are hidden away and stored in secret places in the bush. They are transferred from one generation to the next.

Each set of trumpets consists of a number of distinct and named short and long trumpets. The number of trumpets varies. Some sets contain six, others only five trumpets, but never more or fewer. The names of the different types are: *einde*, *timbiaha*, *seite/alehe* and *noumi*.

The sets as such display anthropomorphic features. *einde* (koki) is the term for the white cockatoo – the same name as the totemic category[4]. It is a short trumpet, approximately one foot in length and is described as the "mouth" of the whole set. The variation of the composition of the different *landuhe sinime* always reflects the number of *einde* trumpets the set contains. Some *serengel* such as *woluho* possess two *einde* trumpets, others like *ilhal* or *ihele* have only one. The number of the other trumpets is always the same. *Timbiaha* (the generic term for the boa snake) is also a short trumpet, but of a different length from the *einde* trumpet. It is described as the "weapon", or the part with which the *landuhe sinime* fights[5]. The *seite* or *alehe* (the terms are used synonymously) are long instruments, some three feet in length. There are always two such trumpets to each set. They are described as forming the "legs" of the set. The *noumi* trumpet, also a long one but different from the *seite/alehe*, is the central piece of the set. It is translated as the

"mother" of the *landuhe sinime*. It acquires its primary significance through the fact that it starts and ends each piece of music.

As stated, the trumpets are usually hidden away in the bush. It is on the occasion of tamberan events – especially at the beginning of a ceremonial cycle – that they are brought to the village, more precisely, the powerful illusion is created that the tamberan comes to the village. The men first play the trumpets in hiding, out in the bush in spirit places such as in Wandihil, the location where Wohi, the most prominent culture hero, is said to have resided after his arrival in the Warengeme area. From there the trumpets gradually approach the village in stages. The approach of the tamberan is heralded by the playing of a small whistle-like instrument made from the shell of a coconut which precedes the procession. This instrument is described as the *ningal* (son) of the trumpets. Each *landuhe sineme* has its own *ningal*, e.g. there is a *ningal ilhal*, or a *ningal serkauwi* and so forth. The sounding of the *ningal* is the sign for all uninitiated people to vanish from the village and go into hiding until the tamberan has reached its place in the ceremonial house where it will stay until the ritual period is over.

We can take the *landuhe sinime* to be representations of the tamberan. It is never directly stated that the tamberan is a being or a creature of some form but it is certainly imbued with creature-like qualities. The *serengel pinandil* are basically described as being male whilst, in some cases, two *serengel* are seen as forming a marital union. In Talkeneme, for instance, *ihele* and *serkauwi* are described as standing in a husband-wife relationship, the same is the case in Wolhete where the two *elbange* are said to be man and woman. Each set combines its different elements to take on the vague contours of a creature-like being. It has a mouth, two legs, and it carries a weapon. Despite being granted an overall male status, the central piece of each set is represented by a "mother", furthermore each *landuhe sinime* has a *ningal* which heralds the arrival of its "parent" in the village. It also is credited with the capacity for movement. The tamberan lives in the bush and it comes to the village where it resides in a house, the same as humans do. The central aspect, however, is that the tamberan is credited with vocality which finds its expression in the sound of the trumpets. It is the trumpets that bring the tamberan to life, and it is the secret of the "voice" of the tamberan that the uninitiated primarily get to experience (cf. Tuzin 1980). The tamberan ultimately lives through its "voice" which, in turn, is brought to sound by the men playing the trumpets. One of the central aspects of initiation into the tamberan concerns the disclosure of the secret of the "voice" of the tamberan. The neophytes are shown the trumpets and initiated into the coveted secret of men, namely that men "make" the tamberan and thus actually hold the key to the mysteries of creation, fertility, growth and thereby wrest the power from women, in whom these qualities appear to be inherent. However, not all pertains to the creation of illusion, although this is a central aspect. The tamberan retains a residual dimension, it also has an existence of its own. Outside the ceremonial cycles the tamberan is said to be sleeping, it is brought to life by the men, in the process of which it exerts a power of its own. The men create the illusion but, simultaneously, they become subject to the thing they create, and it is left to them to control and appease what they themselves bring to life. The men make the

tamberan, but it is also the tamberan that makes men. I shall have more to say about the tamberan as such later.

I now return to the social dimension of the *serengel pinandil*. As stated above, each *serengel* consists of a group of men with their kawas. Together they form ritual action sets. Normally a man belongs to one *serengel* but if he ranks as *elbauel* he participates in two or three such *serengel* in different wards. Successors to ritual positions naturally also inherit membership in a specific *serengel*. The *serengel* groups are durable units. They step into action and cooperate in various spheres, both within and outside the initiation cycles. Food prestations which are made outside a ritual cycle between two kawas always involve the other members of one's group as well; in the night following the prestation the men perform their specific *serengel pinandil*. However, their major appearance occurs in the context of the *pinandil* feast, which marks the ending of a ceremonial cycle. Together, they erect a mast, the *pinandil* itself, which is decorated with sprouting coconuts, and these are, afterwards, distributed. The climax of the *pinandil* feast is the event of the food exchange between the kawas themselves. I shall be returning to this event later on. At the present I should only like to take note of the configuration that the *serengel pinandil* blend the two codes of interaction, in the sense that they form a unit in which both cooperation and apparent competition are included. Together they share the responsibility of erecting the *pinandil* and share the ownership of it – the mast itself being a representation of their unity – whilst shortly afterwards the members shed their unity and step into opposition to each other during the competitive event of the food exchange.

I now come back to the second dimension of dual division. This is the division into *pengame* and *ambuli*. Like the *serengel pinandil*, *pengame* and *ambuli* refer to sets of trumpets and their corresponding songs or pieces of music but also to the ritual groups which perform these singsing[6]. Whilst *ambuli* consists of six trumpets (the types are the same as in the *serengel pinandil*), *pengame* has five trumpets. The two sets play different pieces of music, which the members of both groups are versed in, but the right to play the piece is vested in each group respectively. *Ambuli* and *pengame* again cross-cut the basic moiety division. Each group combines a number of *serengel pinandil*. In Warengeme ward, for instance, *woluho* and *wari* together make up *ambuli*, and *ihele* and *ingilauwa* form *pengame*. The other wards split in the same fashion. Whilst *ambuli* and *pengame* are, in principle, ward-based entities, a notion of affinity is recognized between the men of *ambuli* and *pengame* respectively from the different wards. All the wards have this distinction between *ambuli* and *pengame*, with the exception of Wohimbil. The reason for this was difficult to ascertain and I received contradictory explanations; the most convincing was that Wohimbil, due to the fact that it was a comparatively new ward, had never gone through a complete ritual cycle including all three tamberan stages. Only if, and when, Wohimbil staged a *kwal* tamberan would it have this division.

The two groupings contain both complementary and oppositional aspects. Within an initiation cycle *ambuli* and *pengame* complement each other; outside the sphere of initiation and on special occasions they stand in opposition to each other. Within the ceremonial cycle *ambuli* and *pengame* are performed frequently, and to mark different

occasions, following the initiates leaving seclusion and being ritually re-admitted to the village, and up to the final *pinandil* feast which ends an initiation cycle. The two singsing are performed alternately by successive players all night long, and often two or three nights in succession. In this context the basic moiety aspect predominates, in the sense that the initiating moiety performs for the initiated half, and vice versa. It is outside the initiation context that the two units step into opposition to each other. Specifically, this is the case on the occasion of the death of a member. Beside the different food exchanges which take place between the various categories of cross kin after a death, the *ambuli* and *pengame* sections initiate a series of exchanges between each other. If, for instance, a *pengame* has died, the *ambuli* section will present the deceased's group with one or several pigs which will then, shortly afterwards, be returned by the *pengame* to their *ambuli* counterparts. The exchange basically reconfirms and sustains the ritual bonds between the two units beyond the death of one of its members.

Thus we see that like the *serengel pinandil*, the *ambuli* and *pengame* groups combine both the elements of opposition and incorporation. They consist of basically, ritually opposed sets of kawas but, on certain occasions, opposition gives way to corporateness and each group combines its resources in order to step into opposition with its counterpart.

With this chapter on ritual organization, the section on the social mould ends. I now turn to the question of social practice and the issue of social process, in the course of which I shall be returning to the ritual sphere (cf. chapter seven) but looking at it from a different angle.

NOTES:

[1] A similar duration is noted for the Gawanga (Obrist 1992:79). Whether the length of these cycles is the result of the impact of colonialism – the experience of the Second World War, the absence of men through labour migration in the late forties and fifties, and the beginning of cash cropping, which diverted much time and land away from the production of surplus food supplies - or whether they were as extended in "traditional" times as well remains an open question. But I could well imagine that these exogenous factors did have an influence and prolonged each cycle markedly.

[2] B. Allen (1976:107) contains a map showing the ceremonial links between all the villages of the Dreikikir area.

[3] The Tok Pisin term kawas is both a noun and a verb: To kawas with someone means to ritually inter- and transact with someone. I shall retain this convenient usage here.

[4] Whether the various instruments carry personal names as well I do not know.

[5] I never set eyes on any of these trumpets, except on photographs. It was said that all of them had been destroyed over the last twenty years or so, and especially since the arrival of more fundamentalist churches, such as the South Seas Evangelical Church or the New Apostolic Church, which are rigorous opponents of traditional culture in general and the tamberan in particular. Therefore I could not check upon the often rather contradictory descriptions of the physical features of the various trumpets. A set was acquired by Robert MacLennan in Warengeme in the early seventies and is now located in the Hornimann Museum in London.

[6] The Tok Pisin singsing is a very comprehensive term. It refers to any form of ritual or festive event which includes the elements of dance, songs and instrumental incantation. All the festive events included in the tamberan are referred to as singsing.

SECTION TWO:
THE REALM OF SOCIAL PRACTICE

In this second section I turn to the aspect of social process. I try to show how, within the confines of the conceptual framework described in the first section, the effective social order is produced and reproduced in, and through, the interaction of its agents. In the process, the differential codes of transaction acquire primary significance. The section is again divided into four chapters.

The first chapter (5) contains a description of the pattern and rhythm of everyday social relations. Based on the case study of Enniki, I introduce the reader to an average Warengeme hamlet. At the centre of attention stand a man called Mahaite Ningaha and his family, and the relationships between the family members. I then go beyond the boundary of Enniki and portray Mahaite's web of meaningful relationships, i.e. the small group of men he stands very close to. They are the men whom he regularly visits and receives visits from. In view of the general discretion and restraint which governs social relations, the act of visiting acquires special significance.

The second chapter (6) is the longest in section two. I start off by taking a second look at cross and parallel kin, this time from a different angle. I argue that the two kin categories are identified with two opposite basic cultural notions and the codes which produce them: agnates with the idea of common substance and the code of sharing, cross kin with the provision of sustenance and the code of formal exchange. Events of formal exchange are either directly or indirectly linked to different life-cycle events and involve the provision of nurture between individuals and groups which stand in a cross relationship to each other. Taking two interlinked case studies I proceed to show how social formation grows out of, and is constructed around the organization of, events of formal exchange, and how the effective social order – in contrast to the conceptual framework – is an emergent property of the interaction of consciously acting social agents. Founded on the principle of reciprocity, formal exchange produces relations of equality whilst the notion of sharing often gives way to contention and jealousy. Here, we encounter a divergence between ideology and practice. Whereas ideology defines siblings and other agnates as those people one stands close to, practice shows that a man is more likely to expect rivalry and adversity from his agnates than loyalty and unequivocal support. Sibling antagonism is one of the hallmarks of the social order. In the second part of the chapter I take a closer look at the meaning of the different kin statuses and the quality of relationships which the differential cultural codes engender.

In the third chapter (7) I return to the topic of the tamberan, looking at it from the angle of process. In the complex of initiation men re-enact the basic cultural themes of substance and sustenance, this time, however, without the contribution of women, at least in terms of accountability. In initiation, the role of providing nurture is taken out of the hands of women and placed in the hands of men. During seclusion, the initiates are taken from the village and the appearance is created that they are being sustained by the tamberan. Through the claim of being in control of the tamberan, and, thus, the secrets of fertility and

growth, men legitimize their supremacy over women. In the first half of the chapter I follow the ritual process by outlining the procedures of initiation. The tamberan not only provides the means through which men attain ascendancy over women, it also constitutes the forum in which men compete for status and prestige with each other. In ceremonial exchange, direct ritual partners challenge and compete with each other, thus boosting one another's status as men of renown but breaking even in the end. Like *meinheil* (affines), *pinandil* (exchange partners) rank as paragons of equality. Otherwise, however, the male solidarity which the tamberan professes to create turns out to be a chimera, and contention and hierarchy are dominant features of the whole complex. The ritual system sees the emergence of the bigmen, singular figures who, on the strength of personal potentials and skills as managers and manipulators, heave themselves above their fellow men and take over the leadership roles. The second part of the chapter looks at this system of bigman politics.

In the last chapter (8) of this section I deal with the issue of sorcery. Sorcery is a dominant feature of, and theme in, Wam society. It becomes manifest in various forms. It has explanatory value in times of misfortune and, especially, in relation to death; serious conflicts find their expression in the idiom of sorcery accusations; and it is perceived as being an instrument of power, which men revert to in order to intimidate others and enforce their compliance. In the course of the chapter I examine various aspects of the sorcery complex.

In this section, in particular over the next two chapters, I shall be relying on case study material to exemplify my approach to the social order. My main point of reference in this context is a man called Mahaite Ningaha and the web of relations which surrounds him in spatial, social, and temporal terms. Mahaite Ningaha is a man in his mid-fifties. He belongs to the *eilehe* section (A1) of the Enniki lineage. He is married to a woman called Haitewa from the Womsok lineage (P1). They live in the hamlet of Enniki. Together they have six children, two sons and four daughters. All but the youngest daughter are grown-up and married. Mahaite is a quiet and peaceful man, not prone to "mitasolism" like, for instance, his lineage sibling Selmbia. He is generally well liked in the village, and he does not become involved in the frequent quarrels and village disputes. He is renowned for his skills as a grower of yam and as a hunter but he does not rank as one of the bigmen of the village. His name Mahaite (Wam for meat) is a reference to his abilities as a hunter and to the numerous pigs he has killed in the past. Mahaite was initiated into the *Nau* grade of the tamberan in the early sixties. Although he recalls the bygone days of the tamberan and the thrills of ritual exchange with enthusiasm, he acknowledges that the days of kastom are over and that the villagers today face different and more pressing problems. Together with his wife he recently became a member of the Catholic Church. Mahaite now officially goes by the name of Abraham Ningaha, his wife is Monika Haitewa, Monika being the Christian name of her first daughter who died by sorcery in 1987.

CHAPTER FIVE

THE HAMLET AND BEYOND

Enniki is one of the acknowledged oldest hamlets of the village. It is located on the main ridge in a very central position at the side of the road (cf. map 4, p.41). Together with Pengi, Sualebanau, Tillenge and Ahambil it forms a hamlet cluster. The core inhabitants of Enniki, Pengi and Sualebanau belong to two linked segments, the *eilehe* and *enaha* (A1 and A2) of the Enniki lineage. Pengi and Sualebanau are both nuclear hamlet groups, that is to say, they are inhabited by single conjugal family groups. Enniki displays a somewhat more complex structure.

Enniki lies on a small bluff, set back approximately ten yards from the road. Two steep little paths lead up to the hamlet. The houses are arranged round a small plaza which, in the days when Enniki was still a ceremonial centre, used to be the dancing ground (see plate 4). A little path leads up the hillock, on top of which Tillenge-Ahambil is situated. Immediately below Enniki lies Sualebanau, which is inhabited by Selmbia, Mahaite Ningaha's *eilehe* lineage brother, and his two wives with their children. Selmbia is one of the few men who live together with their wives in the same hamlet. As we shall witness later, this setting is the cause of much trouble and conflict.

In 1985, Enniki consisted of four conjugal families which are intricately linked to one other in different ways. The undisputed hamlet head is Mahaite Ningaha (see plate 5). Together with his wife Haitewa (see plate 6) and three of their seven children they occupy one house. Next door to the living house was Mahaite's storage house. Originally it was intended as a yam storage hut but during the whole period of research no food was ever kept there; instead it served Mahaite as a storeroom for miscellaneous tools and other paraphernalia. Two of their daughters are married and live in other hamlets close by; the eldest son Nanguher also lives in Enniki with his wife and two young daughters. They form a domestic group of their own. Haitewa and the wife of Nanguher are from the wards of Wohimbil and Warengeme respectively. The other dwelling house is occupied by two men with their families: Numbia from the *enaha* segment of the Enniki lineage and Wolimbi, a man originally from the *tineme* line (D1) of Talkeneme. The two men are closely related to each through a sister-exchange marriage, Numbia marrying Wolimbi's sister and Wolimbi Numbia's. Together with their wives and children they occupy separate sections of a large house, which they built together in 1984. Although the two families are related closely in social as well as spatial terms, they form two separate households.

The level of sharing and cooperation between the different families is high. Mahaite and Numbia are close agnates belonging to two linked lineages. They address each other as *nauwie*, i.e. brother, more specifically Numbia calls Mahaite *hurineme* (eB), whilst Mahaite calls him *somal* (yB). Numbia and Wolimbi are *meinheil* to each other. Mahaite and Wolimbi stand in the same relationship, namely for two reasons. In a first marriage, Wolimbi married a lineage sister (an FBD) of Mahaite. However, the two separated some time ago and the sister now lives in Tillenge with her children and with another man. The second reason is that there exists a standing cross-relationship between Mahaite's and

Wolimbi's descent lines, since Mahaite's FF married Wolimbi's FFZ. This actually formed the basis of Wolimbi's first marriage to Mahaite's sister, where she was the return for the sister which Wolimbi's FF "gave" to Mahaite's FF. By corollary, Mahaite's and Numbia's children call Wolimbi *anheil* (MB). The same applies for Wolimbi's children in regard to Mahaite and Numbia. Numbia is *agel*, father, to Mahaite's children, the same term is applied vice versa; the wives of the persons they address as *agel* are *ni*, mother, the female counterpart to *anheil* is *ananei*. The pattern of relationship terminology in the hamlet would, in fact, be straightforward if it were not for the presence of Haitewa, Mahaite's wife, who, strictly speaking, belongs genealogically to an older generation. Mahaite and Haitewa married "wrongly" according to the rules of marriage, and, by the logic of the system, Mahaite should really call Haitewa *ni*, i.e. mother. For the members of the immediate nuclear family this has no consequences, the children call Haitewa *ni* and Mahaite addresses his wife as *elmessie*, i.e. wife or woman, but Numbia or his sister Melewasi, the wife of Wolimbi, for instance, address her as *ni*, and Numbia's children call her *mai*, grand-mother. However, in the bustle of everyday hamlet life, these classificatory distinctions make no difference, and behaviour, especially where children are concerned, is not so much geared to the status of kin categories, as to the variables of age, gender, and personal relations.

Relationships between the families are cordial and free of conflict on the whole. The little plaza is shared by all the inhabitants. Each family cooks and eats on its own but it is quite common for bowls of food to pass from one house to the other, and the people help each other in a variety of ways. The children play there, and in the evenings the hamlet occupants collect round the fire-places which are built ad hoc each evening for cooking. Although there are no rules or formalities about admission or the sitting order, one does observe that the men often congregate round a fire of their own, leaving the women and children to themselves. Depending on the weather, whether it is a moonlit night or not, and on the number of mosquitos around, people retire to their huts something before midnight.

The only two persons during my time there who did not participate actively in the social life of Enniki were Mahaite's two sons. Tetineme, the younger son, at that time was eighteen years old and pursued the vagrant life typical of adolescents before marriage. He was around and about the village most of the time and frequently spent the night in other hamlets with friends of his own age. Whereas his mother showed concern and was often worried about the whereabouts of her son, especially when she knew that he was away at a pati (a dance, social event) in another village, his father Mahaite was often cross and irritated by his son's behaviour and admonished him frequently to think more about work and growing coffee than hanging around the village, but to no great avail.

Nanguher's relation to the hamlet inhabitants was normal, except to his father Mahaite. Their relationship was outwardly cold and radiated an air of indifference. He was practically never seen sitting together with his parents, nor did Mahaite ever visit his son's house, and the relationship was upheld by the bond created by the two grandchildren, who spent much of their time with their grandparents. Mahaite and Nanguher's relationship was not necessarily adverse for personal reasons, it simply reflected the common relationship

pattern between a father and an adult son. Outwardly, at least, it is one of affective indifference, separation, and distance.

When I returned in 1987/88, the pattern in Enniki had changed moderately. The main occupants and their families were still there, i.e. Mahaite, Numbia and Wolimbi and their families. Wolimbi's wife Melewasi had had another baby, and also her aged mother Lagabe had come to live with them in Enniki. She had been living in Pengi, one of the immediately neighbouring hamlets, but had felt neglected by her stepson Katio and his wife, and had asked to be allowed to move in with her daughter and her husband Wolimbi. But there also had been other changes. Tetineme, Mahaite and Haitewa's second son, had married, rather to his parents' surprise and, initially at least, also to their disappointment, because he had not settled for the girl they had had in mind for him. This was the daughter of one of Mahaite's closest associates and friends, a *meinheil* of his, called Mahi. Over the years Mahaite had built up an extremely close relationship with Mahi's daughter, Angali – giving her small presents of food from time to time, and Angali frequently helping Mahaite in garden work – in the expectation that she would some day come to marry Tetineme.

Tetineme had brought his wife, called Landime, to stay in Enniki. Although Mahaite and Tetineme's relationship had been overshadowed by the father's reproaches and threats to bar him from the use of the family's coffee gardens, he had built Tetineme a new dwelling house adjacent to his own. According to Mahaite, his son had not helped him very much in the work. Tetineme and Landime settled down in their new house, and Landime shortly afterwards gave birth to a son. In spite of his being married, Tetineme was not often seen in Enniki and, during his sometimes prolonged absences, Landime would regularly go back to her parents and only return when Tetineme went to fetch her. She was often accompanied by one of her younger sisters, for company and in order to help look after the baby. The treatment Landime received from her parents-in-law was notably cold and reserved, which is in itself not unusual for the relationship between a wife and her husband's parents. But in this case it was more pronounced, especially on Mahaite's part, who was very disappointed that Tetineme had not married Angali and did not hide his disappointment. Landime received support mainly from, and was shown affection by, her female affines, her *kwalinei*, i.e. Tetineme's sisters, and especially by one sister called Nau, who was herself rated as the black sheep of the family after an unsuccessful marriage and her return to Enniki.

The second main change in the hamlet concerned the residential move of Nanguher and his family. The move was not an abrupt one but rather took place in stages. Nanguher and his family spent more and more time in Tembiaheneme with the wife's father and family. He was in the process of building a new house there with help of his *meinheil*. They still occasionally stayed in their old house in Enniki, but increasingly rarely. The pretext for this shift in residence was a lingering illness of Nanguher which manifested itself in the form of a pain in the right side of his chest and shoulder, which made him unable to lift and use his right hand. Apart from receiving rudimentary treatment from the local aid post, the ailment had been treated by various village healers, but to no avail. The diagnoses and treatment they advocated brought no improvement.

Then Nanguher had a dream: he dreamt he had seen the deceased wife of a senior kinsman (no immediate relative of his) in the bush. She had stepped up to him, taken his thumb into her hand and pressed it hard to his right rib cage, causing considerable pain. On the surface, all this really has little to do with the pattern of residence, but since residence is functionally related to social relations and is relevant to the social order, I treat this case at fuller length than would otherwise be appropriate within the context being presently discussed. Moreover, the episode is significant for a specific feature within the pattern of social relations, with which we shall be dealing in the later course of the study, and that is the issue of agnatic antagonism.

Mahaite Ningaha heard of this dream from a third person, be it noted, and went to consult an older man about its meaning. Mani, the man consulted, could not give a precise interpretation, but was at least able to indicate that Nanguher's ailment was connected with the complex of yam growing, more specifically with the handling of long yam, *piressi paineme*, since the right side of the body and right hand are a symbolic indicator, a piksa (picture) in Tok Pisin, of the category of long yam, whereas the left side is symbolic of *melehei*, the short yam. Mahaite Ningaha, however, kept this information to himself and did not inform Nanguher. When I aired my astonishment about this, he said, "why should I tell him, he never comes to see me, and he has never told me about his illness." Although Mahaite knew about his son's illness, he had never been formally approached or informed by his son, so officially he knew nothing about the ailment and was, therefore, unable to offer support of any kind. Such behaviour suggests an attitude of indifference or even dissension between the actors involved. In the case of agnates, this is not beside the point. Frontstage, at least, fathers and adult sons, amongst others, do lead very separate lives and attempt not to interfere with each other's affairs. This is done out of respect for the counterpart's sphere of autonomy. However, this is seldomly achieved voluntarily, since fathers try to retain their authority over their offspring much longer than their sons are prepared to grant them it. Young men are keen to outwardly demonstrate their independence and autonomy very much earlier than their experience and knowledge of land issues, property relations, and gardening would actually allow. This is the cause of much friction between fathers and sons, and one mode of marking one's independence of paternal authority and avoiding an aggravation of the situation at the same time is by shifting residence. Naturally, fathers deplore this and, backstage, often complain about their sons' ingratitude and lack of respect, but frontstage they hide this behind a cloak of indifference. Showing concern in this context could be interpreted by others as a sign of weakness.

However, if Mahaite had not been seriously concerned about his son's health, he would not have sought advice from an elder kinsman about the nature of Nanguher's dream. Mahaite's concern is also shown by the fact that he allotted Nanguher a block (*amuneme*) in his garden and planted food for him, since he was unable to make a garden of his own due to his ailment. Significantly, however, he did not give it to his son directly, but officially to Nanguher's five-year-old daughter Nimbalme. In this way he could elegantly bypass an awkward situation suggestive of patronization, and, on the other hand, it also

made it easier for Nanguher to accept it without receiving impairment to his image of being autonomous.

The principle of autonomy at times develops a dynamic of its own; it creates barriers between the actors in the drama which they find difficult or even impossible to overcome on their own, and thus at some stage of the process, they resort to mediation through third parties. Mediation in this case was offered by Nanguher's father-in-law, Hiale, on the occasion of a second dream that Nanguher had a short time later. Hiale's relation to Mahaite and his son Nanguher is a typical outcome of the warped marriage system and terminological splitting. Hiale nominally calls both men *ningal anheil* although they belong to two different generations. Although of the same age, Hiale is genealogically one generation above Mahaite and therefore calls him *ningal anheil* and, consequently, he should call Nanguher, *palel* ("grand-son"). However, through his marriage to Hiale's daughter – once more a "wrong" marriage – Nanguher moved up a generation and calls Hiale *agel anheil*, the term for mother's brother and also father-in-law. Through a number of circumstances – Nanguher's marriage being one of them – Mahaite and Hiale had also switched their rapport to each other over the years and now classified their relationship as one of affinity or *meinheil*-ship. In this way the taxonomical system has been adapted to fit the empirical actuality. Thus, when Nanguher's ailment lingered on and he had his second dream, Hiale – being a cross relation to both men – was in the right position to take over the role as mediator.

In terms of agnatic tension this dream, or dream fragment, since it is very short, is significant. In it Nanguher was walking along a path in the bush, when he suddenly saw his father Mahaite walking ahead of him. He recognized him clearly, but then suddenly his eyes clouded over and he lost sight of him. Hiale, himself an experienced so-called *hilenge* healer, put Nanguher's ailment down to his strained relationship to his father. No specific event was mentioned, merely the estrangement between the two. It was decided to test the validity of the interpretation through divinatory means. The actual divination was to be performed by Mahaite in the presence of both Nanguher and Hiale. A coconut shell was filled with water and two ingredients were added, *misaule*, a type of fern and leaves called *mandingre*. Then stones were heated in a fire. This type is a very common form of divination. Usually there are three or four coconut shells, each representing a possible source of the ailment. In Nanguher's case there was only one shell, as only one possible cause was to be tested.

Mahaite extracted a heated stone from the fire and placed it in the coconut shell. Immediately the water started to bubble and boil, which was taken as a clear sign that the hypothesis was correct (if it had taken two or more stones to make the water boil, the diagnosis would have been false). Mahaite then rubbed his son's body down with the steam that was rising from the bowl. This act is understood to free the patient's body from all potential ill intentions and the residues of antagonism that, figuratively speaking, stick to the skin of the patient. It was shortly after this episode that Nanguher and his family finally left Enniki and shifted residence to Tembiaheneme. Conflict and antagonism are often encoded and expressed in terms of illness and health. Explicitly the residential move had

therapeutic aims; at a deeper level it was a method of resolving a conflict situation within a category of kin, agnates, where potential conflict and tension is inherent.

The last change in the composition of Enniki involved Mahaite's second daughter Nau. Early in 1988 she gave birth to a baby girl. The fact was nothing exceptional, but the accompanying circumstances were rather unusual, since she had been able to keep her pregnancy concealed until birth. The child was illegitimate, and Nau's irate father, Mahaite, exclaimed that he was no longer prepared to provide for his daughter, nor for her child. It was not Nau's first illegitimate child and since she was still officially married – her husband, however, had been absent from the village for several years already and had married a second woman in the meantime – Mahaite was worried about the reactions of her husband's family. It was in this situation that Tetineme proclaimed that he would officially adopt the child and take care of both the baby and his sister Nau. The pattern in this situation is again eloquent of the specific nature of social relations, in the sense that a son steps in for a sister of his and in doing this counteracts a decision made by his father.

On the whole, however, and compared to other hamlets, Enniki was a harmonious and peaceful settlement and the few conflicts that did ensue were mainly with residents from other locations. For an adult married man such as Mahaite Ningaha the rhythm of daily life is divided between the two spatial (of course also cultural) spheres of bush (bush, area outside the immediate village) and banis (hamlet, area of residence). Taking into account seasonal variations, the day is spent in the bush, whilst in the evenings and at night the villagers are mainly to be found in the hamlets. In the context of everyday life, the bush is generally associated with economic activities and the domain of work, which is focused on garden work in particular but includes a score of other tasks and jobs which are performed during the day as well. In earlier days, for men the bush was intricately associated with the domain of hunting (wild pigs, cassowaries) but, since there is practically no game left, hunting plays no important role any more, although older men in particular still do undertake hunting trips to the bush. The time invested in hunting in earlier days is now spent in cash crop production.

Women leave their hamlets for the gardens earlier than the men and return before their husbands in the evening. The men take their time and frequently stop off on their way to and from the bush for a chat and a smoke or a betelnut. The garden, which is usually equipped with some form of shelter or hut, is the hub of activities during the day. Whilst women stay and toil there the whole day – taboos forbid them to leave and re-enter the garden area during daytime – the men's workday is divided between short periods of intense work in the garden and trips to the surrounding bush to perform various tasks (e.g. collecting betelnut, fetching tobacco from an old garden, checking up on a yam storage house, etc.) and visiting other men in neighbouring gardens, either to lend a hand at work or for the sake of a short break.

This bustle of activities during the day stands in stark contrast to the quiescence in the village after dark. In the evenings and at night the women, almost invariably, and the men, usually, are to be found at home in their banis. Whilst roaming the village after dark is tolerable for (male) adolescents, it is regarded as unfitting for adults. For them to raun long

ples (roam the village) carries negative connotations, and adults who are frequently encountered outside their hamlets after dark expose themselves to the suspicion of being up to no good, of rumour-mongering, or, even worse, of plotting schemes of sorcery. In earlier days, adult men spent a large part of their time with their peers in and around the ceremonial house, or else they spent days or weeks on end in their bush camps next to their gardens, whilst the hamlets were looked upon as the realm of women and children. Over the last fifty to sixty years this pattern has changed considerably, due to the cessation of the tamberan and, today, men too spend a great deal of their non-working time in their hamlets together with their families.

Under these altered circumstances of male sociability, the act of visiting one another in one's hamlet has acquired a special significance. Men do go to visit each other in their banis in their spare time but the number and range of persons one visits is remarkably restricted. Unlike casual encounters on the way to the garden, down at the stream at washing-places, or on the occasion of a council meeting, visits to people's hamlets have potentiated social relevance, because entering an individual's personal domain of living, as constituted by a person's banis, implicitly entails an encroachment on the person's sphere of autonomy and fleetingly upsets relationship balance between the two actors. Habitus and etiquette require that the host make his guest welcome and show hospitality by presenting him with small gifts of betelnut, tobacco and possibly food, which, however, the visitor has not specifically come for. Moreover, granted the social significance the act of visiting has, apparently unmotivated visits are liable to suggest that the visitor has come on a matter of importance or with a demand of some sort, which again need by no means be the case, and may create an impression which the visitor is anxious to avoid, since making demands on another person points to deficiencies in one's own self-sufficiency and autonomy. As a consequence of the potentially negative connotations paying visits to others can have, the act of visiting has special social significance and is restricted to persons with whom one is especially close, either in terms of kinship and/or through bonds of friendship. Actually, the act of visiting becomes a means through which meaningful relationships not only are established but also find their expression. The meaningful relationships are those which are actually lived and sustained through ongoing interaction.

The implications and complications of visiting primarily refer to the relationship between genealogical equals, that is between siblings and affines. Between people of different generations matters are less complicated, and young men and women visit elder kinsmen and kinswomen with comparative ease. Such behaviour is not only approved of, but actually commended.

One could say that a person entertains effectively close relations with those people he habitually visits and by whom he is regularly paid visits. Visiting is one of the gauges of measuring social distance and proximity. Effectively close relationships are characterized by an exceptionally high degree of trust and confidence. They are looked upon as precious; at the same time, an individual has precious few of this kind. Individuals who stand in such a relationship lend each other unconditional mutual support and go out of their way to help each other, even if this means exposing themselves to danger or trouble. This kind of trust

finds its ultimate expression in the mutual assurance that neither of them would ever apply sorcery against the other, either directly or indirectly (for instance by becoming a part of a conspiracy against the other), and also in the fact that the other would be the first to be let in on the secret if a man was intending to use sorcery against a third party. It is perhaps hardly astonishing that a person has only a very limited number of such close confidants; what is more noteworthy is that, to a significantly high degree they are not men from one's own lineage or the extended agnatic segment but are predominantly recruited from one's cross-kin section and/or one's immediate ritual partners.

Let us return to Enniki, and specifically to Mahaite Ningaha as the focus of the case study. Apart from Numbia and Wolimbi, with whom he shared close ties on the basis of shared residence, Mahaite maintained effectively close relationships with four men who belonged to different lineages but who shared the common denominator of being cross-kin of his. Three of them ranked as *meinheil*, one man, by the name of Atuhembel, was a classificatory *agel anheil* and, at the same time, his *pinandil* from Talkeneme. Atuhembel was an old man and largely confined to his hamlet. He was too weak to undertake the strenuous walk from Simete, where he lived, to Enniki, so it was Mahaite who regularly visited him at his home. Mahaite and Atuhembel were direct ritual partners but the latter was also a classificatory mother's brother of his, and in the dealings between the two men the senior-junior aspect of the relation prevailed. Not only had Atuhembel initiated Mahaite into the *nau* grade of the tamberan, Mahaite had also inherited land and other forms of estate from a lineage brother of Atuhembel (from his immediate mother's brother), a man called Lohumbo. When this man died, Atuhembel had transferred the titles to Lohumbo's estate to Mahaite (the circumstances of this are discussed in more detail later). Although Atuhembel had sons of his own, it was primarily Mahaite who cared for the old man and his wife, not only in terms of gardening and food, but mainly also emotionally. His close relationship to his *agel anheil* did not extend to include Atuhembel's two sons. They ranked as *meinheil* to Mahaite but the relationship was a purely nominal one.

In the same hamlet where Atuhembel resided lived a second one of Mahaite's close associates. This was a man called Lebe. Lebe too ranked as a *meinheil* although the two men were not conscious of a direct genealogical link in the past. The two men had spent part of their childhood together but the real basis of their relationship was founded in the experience of being initiated together into the tamberan. They were members of the same ritual half and together belonged to the *ambuli* ritual section of Talkeneme but shared different *serengel pinandil*. They supported each other in ritual matters and also cooperated closely in economic affairs such as gardening, cash cropping, or sago production.

Mahaite's third confidant, a man called Nimbalme, lived in the hamlet of Tillenge and was thus practically a co-resident of his. Apart from this proximity in spatial terms, the two men were linked to each other through an immediate bond of affinity, since Nimbalme had married Mahaite's sister. She died at an early age when Nimbalme was absent from the village, working on a plantation. It was Mahaite who took over the guardianship for his sister's son until Nimbalme returned to the village. In addition, Mahaite and Nimbalme

were also bound together by the common experience of initiation. When Nimbalme was killed by sorcery in 1986, Mahaite functioned as one of the principal figures in the investigation of his death and, later, in raising the accusations against the suspected group of sorcerers from Talkeneme. The fact that he did so reflects the substance of their relationship.

The fourth man in the set of close associates was a further *meinheil*: the man called Mahi whom we encountered above briefly as the father of Angali, bride-to-be of Tetineme (see plate 7). The two men were interlinked on several levels of cross-kinship. Not only was Mahi's mother from the Enniki lineage, Mahi himself had married a classificatory sister of Mahaite from his *eilehe* section, and in the next generation Mahi's son had married Mahaite's eldest daughter. In addition, Mahi's sister was married to Mahaite's lineage sibling Selmbia but, as we shall see later, this relationship did not necessarily contribute to solidarity between the two kin groups; instead it put a strain on it. If things had gone according to Mahaite's plans, the relationship web would have been further reinforced through the marriage of his son Tetineme to Mahi's daughter Angali. However, as mentioned above, Tetineme frustrated these plans through a marriage of his own choosing. Angali would have been rated as the "exchange" for Mahi's wife, who at the time married "free", i.e. without an exchange and without compensation.

Overall, however, these setbacks did not perturb the relationship between Mahi and Mahaite. Mahi's open "marriage debt" was never an issue that came under discussion. Both men maintained independently from each other that they were so close to each other that they need not bother about meticulously balancing debts. In ritual terms they belonged to the same moiety, but to different *serengel pinandil* and opposite sections in terms of *ambuli/pengame*. Nevertheless, they granted each other support in meeting their separate kawas obligations.

As in the case of Lebe, Mahaite and Mahi also helped each other in garden work and sago production. Their close relationship was extended to include the other members of their families as well. Mahi's two daughters belonged to Mahaite's most trusted female helpers in garden work, and the same went for Mahaite's daughters in the opposite direction. One notable feature of the relationship between the two families was that there was a continuous reciprocal flow of both cooked food and raw foodstuffs between the two households. The bringing of these token gifts of food not only confirmed and expressed the significance of the relationship, it also provided the mutually, and mutely, acknowledged pretext for the men to pay each other visits in each other's hamlets. For, in spite of the closeness of the relationship between the two household heads, simply "dropping in for a visit" without a manifest pretext would be regarded as tactless and as a breach of the code of sociability. In this context, the young grandchild, whom Mahi and Mahaite "shared", also played an important role in that she had a mediating function. Mahaite and Mahi took turns in fetching or bringing young Sikergeni to and from Enniki and Akumeneme. She provided them with the ideal key for visiting each other and spending time together.

Close bonds of this kind represent paragons of male relationships. It is significant that they are relationships that are founded on an original cross-kin link which, even if no direct

genealogical link is detectable, dictates a basic disposition of respect and equivalence to each other. Over time and through ongoing interaction, the habitus associated with the *meinheil* relationship has been supplemented with the more casual code of "sharing" associated with siblingship without, however, dispensing with the original disposition. Over the years they have "become like brothers", Mahaite would say, without the relationship becoming burdened with the negative connotations siblingship carries. Every man has such valued relations. They form the core of an actor's network of social relations. In the otherwise competitive, and often contentious, realm of male relationships they represent havens of unconditional trust and support.

Of course, Mahaite's close confidants were not the only people to regularly pay visits to Enniki. All the other residents, both old and young, men and women, had similar sets of close associates, who came to see them in their banis or whom they went to visit. Towards evening, Enniki became a hive of buzzing activity with the laughter and shouts of playing children – and with the intermittent calls of the adults to be quiet – dominating the acoustic sphere. Things quietened down after the evening meal when the young children retired to the house or fell asleep in their mother's lap. Mahaite and Haitewa's married daughters with their children were almost daily visitors to Enniki, sometimes they were accompanied by their husbands. Although young couples have houses of their own, it is often years before they actually form an independent household. Until then it is the mothers who remain the focus in the provision of food. The in-married women frequently received visits from their fathers or brothers. Haitewa seldom left the hamlet to go and see others but from time to time she was visited by one or the other of her brothers from Wohimbil, or their children, and frequently by her sister's children. The sisters themselves, on the other hand, never came round, except if they happened to be passing through Enniki anyhow; then they would stop for a few words but rarely stayed longer. Women often have the same strained relationship with their sisters as do men with their brothers. Generally, Mahaite gave his wife's visitors a friendly welcome but, on the whole, he remained indifferent towards them. Even if Haitewa's brothers did rank as his *meinheil*, they were rated as purely nominal relations and he showed them no more than the respect and courtesy that was due to them on the basis of affinal relationship.

Women on the whole, and married women in particular, display a much lower degree of mobility than the men. Outside their work sphere they remain confined to their hamlets. This is partly due to the circumstance that they are burdened with all the housework and the care of children, but it is also due to the specific notion that a woman's place is in her hamlet and house, whilst men are more orientated towards the outside.

Mahaite's four close confidants formed the central reference points in his network of social relations beyond his own family and the immediate confines of his hamlet. However, his range of meaningful relationships was not exhausted therewith. He maintained significant ties with a variety of other individuals from both the cross- and the parallel-kin sections, for whom he felt concern and sensed obligations towards. Occasionally he went to see these people in their hamlets but these visits were related to a specific purpose and were not made merely for the sake of congeniality. Such a purpose, for instance, was

seeking the advice of a senior kinsman – as when Mahaite went to ask his classificatory father Mani about the meaning of his son's dream – or to discuss an issue concerning garden work or cash cropping. In general, the illness of a kinsman is also an important reason for making a visit. In this context, the call upon the sick person usually follows two aims, an explicit and an implicit one. The explicit one is to express one's concern for the afflicted person, to give him company, and to grant him emotional support; the implicit one is to forestall any potential allegations of being involved in the causation of the illness should the patient's health further deteriorate or should he even die. In the investigation of sickness and death, suspicion quickly falls on those relatives who remained conspicuously absent during the illness or avoided close contact with the body after death.

The range of these meaningful relations is not delineated by ward membership, nor is it defined by the lineage order. Mahaite's important relatives, for instance, were spread over all the four wards and were recruited from diverse lineages. They were men and women to whom he had over the years and decades created relatedness through recurrent and ongoing interaction and to whom he was linked by a dense web of reciprocal obligations and claims stemming from the enactment of specific events in the past.

CHAPTER SIX

THE PROCESS OF STRUCTURE

According to traditional Wam conception theory – today the Western model of conception prevails almost completely – the human foetus is created in consecutive acts of intercourse and solely by male semen. Starting with the head and working downwards, each act adds a new layer of semen to the foetus in "construction", until a human form has been created. A body at this stage consists purely of male substance. The people do not state how many acts of intercourse are necessary, the "construction" of the foetus is regarded as complete when the woman shows signs of pregnancy. From then on sexual intercourse is tabooed and proscribed until a long period after birth. Today, the postpartum taboo has been relaxed markedly and this, the people maintain, is one of the reasons for the rapid growth of population. Should the wife during this "construction" phase be unfaithful to her husband, he is likely to reject the child on the basis that it is not entirely his, not wholly his substance. Where the suspicion of such an illicit union during pregnancy exists, it is later said of the child that it is "half of this man and half of the other man", and the people point to prominent physical features which are characteristic of each suspected contributor.

SUBSTANCE AND SUSTENANCE

All the different body parts, bones, skin, flesh, etc. consist of male substance, a woman makes no contributions. Even the blood (*nimbalme*) appears to be of male origin, at least at this early stage. The mother's role begins after the foetus has been constructed. From now on the child is sustained and nurtured by the mother and it grows on the nourishment received from her. After birth, female nurturance is sustained through breast feeding, so that the originally purely male substance becomes saturated by female essence. This female essence is primarily located in the blood and spreads through the whole body, and it is in the blood that male substance and female essence become mingled rather like a yam soup, where two ingredients combine to form an entity. Female essence makes the body grow and gain in strength. After the lactation period is finished, children continue to be fed and nourished by their mothers; they contain both male substance and female essence. One of the central notions of the male cult, the tamberan, is the idea that nurturance and sustenance is taken out of the hands of mothers and sisters, women in general, and passes over into the hands of men. In the tamberan men feed men, more specifically it is an initiate's *pinandil* who takes over this responsibility. It is only when nurturance is provided by men to men that an initiate becomes a real man. I shall be returning to this point later on.

Turning to the issue of parallel and cross-kin, we see that this basic distinction reflects the views concerning the provision of substance and the provision of nurturance. Parallel kin, that is agnates, are those people with whom one "has substance in common" whilst the cross-kin are associated with the provision of nurturance: they are the mother's people, those people whom she herself shares substance with, and it is along this line that the idea

of providing sustenance is extended to include all her agnatic kin, her sisters (who also rank as mothers), her fathers and her brothers and her brothers' children. Conceptually they rank as the "givers of food".

The idea of siblingship is based on two central pillars. The first refers to the view that brothers are made of the same "material", the same male substance which has been passed down to them from their fathers and father's fathers. The second point, which is incomparably more relevant, is the idea that brothers have been raised on and have grown up on the same source of nurturance, their mother. In other words, they have shared sustenance; they have been fed by the same breasts, eaten the same pre-masticated food, and shared from the same bowl. In practice, the notion of common substance fades into the background, whilst the idea of shared sustenance is foregrounded. Brothers with the same mother feel much closer to each other than do brothers of a different *ni*, with whom they have only substance in common. Moreover, men who adopt a code of sharing with each other are liable to become brothers, irrespective of their original classification as parallel or cross-kin. Two *meinheil* who grow up and share together and generally conduct themselves as the ideal of siblingship prescribes will adopt a sibling relationship and, under certain circumstances, even address and refer to each other as *nauwie*.

Cross-kin enjoy such a high valuation and acquire so much significance because they are granted the status of providers of sustenance. This high esteem is especially granted to one's mother's brother, *agel anheil*, who in metaphorical terms is referred to as one's *ombosahaha* (the root of the coconut palm) whilst oneself is *permute* (the generic term for fruit of trees). The picture here is that of a coconut fruit which grows off the sustenance provided by the roots of the palm, and when the fruit is ripe, it drops to the ground and a new, separate coconut grows. Just as the notion of sharing is connected with siblingship, incorporation and the idea of togetherness, the issue of formal exchange is associated with the category of cross-kin, the providers of sustenance. Formal exchanges are conducted on specific occasions between groups of agnates who stand in a cross relationship to each other, one group granting the other compensation in the form of valuables for received sustenance, or, in the particular case of marriage, for the potential source of nurturance inherent in the woman. These specific occasions refer to certain life-cycle events. The two main occasions are the events of marriage and death, whilst birth itself is an unobtrusive affair and is granted no special significance. For women the first menstruation feast is also an important event and I shall briefly return to it in connection with male initiation since the two issues have conceptual properties in common. Although actual transactions are restricted to only certain occasions, the connotations of formal exchange dominate the cross-kin relationship in general. Mother's brothers and cross cousins (*meinheil*) are connected with the notion of sustenance irrespective of whether they have effectively provided nurturance or not. In this context, however, the Wam do distinguish between purely nominal cross-kin links and more meaningful relationships. On the whole, the more meaningful ones are those where an actual genealogical link is traceable in one of the preceding generations. What is decisive, however, is that their meaningfulness has to be sustained through ongoing interaction in accordance with the habitus the code of exchange

implies, otherwise the significance of the bond will fade away and the relationship will dwindle to being simply one of a nem nating (an empty name or label). Formal exchange does not only express and confirm an existing link, it is also capable of imbuing a relationship with a new quality. Through the enactment of an exchange, two people place their relationship on a new and different footing; they become providers of sustenance to one another. If two distant, or nominal, cross kinsmen act in this way they are energizing a preexistent, but ineffective, linkage – they are giving their relationship meaningfulness – should two agnates start exchanging with each other, it is the beginning of a ritual partnership. The way people regard, designate and treat each other is a function of the code they apply to each other in their interaction. The code, either the code of sharing or the code of exchange, is the independent variable to which the actors adapt their kin status. The relationship status is just as much an issue of construction, a matter of "becoming", as it is of preceding classification, of the "given". Setting out from the configuration he is born into, a man builds up his own meaningful pattern of relatedness. He does this on the basis of practical consciousness, drawing upon the rules and resources he is equipped with and by applying the differential codes he is familiar with.

Formal exchanges take on the form of transactions of objects which are considered valuable. They include a variety of value items such as pigs (*numbwale*), both wild and domesticated, long (*piressi paineme*) and short yam (*melehei*), shell rings (*itampinge*) which were traded in from the coastal area, and a number of other secondary foodstuffs which always go with a prestation. The most important of these are the sprouting coconuts (*nemeti*) which function as tokens of the exchange event. These are planted by the recipients and subsequently serve as a mnemonic device to recall the specific occasion. The valuables are transacted in the form of gifts, and not as commodities, which means that we are dealing with social and not economic transactions. Superficially, commodity transactions and gift exchange can look very much alike. However, as Gregory (1982:47) maintains, the two forms are not the same thing. The difference lies not in the natural attributes of the thing which is exchanged. It is not a matter of value that decides whether a thing exchanged is in the form of a gift or a commodity, it is the transactional relationship which is decisive. When commodities are exchanged, the transaction is terminable. The relation created is that between the objects exchanged, and the value of one object is expressed in terms of the value of the second object. There is equality between the objects, the transactors themselves remain independent. In gift exchange, on the other hand, the relation created is not between the objects (one thing is not expressed in terms of the other) but between the transactors themselves. A reciprocal gift-debt relationship is created which in its "pure" form creates equality between the transactors. The distinction is one of importance in relation to the aspect of social change and the transformations that Wam society is going through at present.

There is no overt ranking order between the different valuables but one can say that pigs are the most important items. No prestation takes place without including at least one pig. The focus on the exchange event as such often tends to disguise the fact that transactions of this kind actually always involve three separate, but interlinked, stages.

Exchange events are always preceded and followed by a series of informal exchanges. Before the actual transaction takes place it involves the pooling of resources, during which the chief donor's close kinsmen and supporters contribute foodstuffs to the prestation to be made. In conceptual terms they are acting as "brothers", even if, in practice, a person's group of supporters includes both cross and parallel kin. Following the actual exchange, we encounter the reverse process, i.e. the recipient distributes the valuables received to the men and women who in the recent past have helped him in some way or another, or to the people to whom he owes small gifts of food from a previous, like, occasion. The receiver himself retains only a small part of the prestation for his own use. Special significance is granted to the mandible (*nungule*) which he keeps in memory of the event. These secondary recipients, in turn, divide and distribute portions of what they have received, especially small pieces of pork, to people of their own choosing. In this way we have a "trickle-down" effect to a wider segment of the population, through which the occurrence of the prestation becomes an event for a much larger range of people than the actual formal transaction involved. These informal exchanges preceding and following transaction events are of substantial importance for the issues of relatedness and social integration. Like their formal counterparts, they are subject to the principles of reciprocity, with the difference that here no ledgers are kept, which of course does not mean that those involved are likely to forget to whose exchange they contributed or from whom they received portions of food. Failure to reciprocate easily leads to dissension. Thus, we can see that each formal exchange event actually has both a formal and informal side to it. Together they combine to form what Sahlins (1974:188) has called a "system of reciprocities".

Every Wam is involved in ongoing exchange relationships, a few, but important, formal ones and a myriad of informal ones. A person is born out of an exchange relationship (marriage), becomes involved and participates all his life in exchange, and his death sets off a continuing series of exchanges which his descendants are left to settle. Beside those exchange events which mark life-cycle stages, formal transactions are also conducted on a few other specific occasions, namely in connection with the transfer of estate and names. Conceptually these various exchange spheres (marriage, death, ceremonial, estate transfer) are distinguished and held apart but in social practice one finds that they tend to overlap and flow into each other, and that debts stemming from one sphere are liable to be recompensed in a different sphere, as when, for example, a debt from a funeral feast is later squared up with a ritual transaction. The field in which we encounter the highest degree of flexibility is the sphere of marriage, and it is here that we are confronted with the source of some of the major contradictions in social formation which are actually central to the issue of the structuration of the social order.

As described above (cf. p. 84ff), marriage takes place in three ways. Either it is effected in the form of two brothers swapping their sisters, secondly, a previous marriage is compensated by the return of the daughter to her mother's natal group in the following generation, and thirdly, we have the *alnde erke* variation which involves the payment of compensation in the form of valuables by the "wife-taking" group. Actually, this third form is not an independent variant but a means of correcting the failure of daughters to return to

where their mothers came from. In reality, one encounters all three forms, the third variation being the most frequent. Whilst direct sister exchange is an intragenerational affair, variations two and three involve two consecutive generations. The "return" variant is a form of arranged marriage in the sense that it is the father and mother's brother, two *meinheil*, who negotiate and arrange for a daughter to return to her mother's agnates. This claim is usually made on the occasion of the birth of the girl, or shortly afterwards, in that the brother brings his sister small presents of sago. Throughout childhood and adolescence the mother's brother keeps up a flow of small gifts of food to the mother and the daughter, thus building up a close relationship to his future daughter-in-law but also with the aim of endorsing his claims to her. However, the relationship not only runs the risk of being one-sided, i.e. the sister's daughter takes a different view of her future but the claimant, i.e. the mother's brother, is also liable to overlook what his son, the prospective husband, has to say to the whole arrangement. The crux of the matter lies in the fact that this kind of patronization runs diametrically counter to the claim of individual autonomy, which young men assert especially in relation to their fathers. Very often sons do not comply with their father's wishes and plans; instead they follow their own strategies. This becomes markedly evident in the fact that they are often not prepared to settle for the woman the men of the preceding generation have selected for them and arranged for them to marry. Although they run the risk of facing sanctions, it is a common pattern for sons to defy their elders and choose a woman of their own liking, usually a girl they have been courting for some time. It is one way of expressing their independence from their fathers. The episode of Mahaite Ningaha's son Tetineme, recounted above, serves as an example here. Today, fathers often try to explain away their sons' behaviour with reference to the influence of modernity and the changing times, but a closer look at the way they, and their fathers, conducted marriage procedures shows that, even when the reign of kastom was still valid, they acted no differently.

Moreover, it is not only the men who have strong claims to autonomy and exert them conspicuously; the women have them as well. Although male ideology sees marriage as an "exchange", practice shows that women fit awkwardly into the category of "value objects". Overall, women socially rank below men but this does not entail that they do not act as autonomous agents in many contexts. It is in the sphere of marriage that women exert their claims to autonomy most effectively. Women do not allow themselves to be "exchanged", they are equally involved in the choice of partners and in setting up their marriage, and little or nothing goes without their consent. Amongst other things this has to do with the high status women hold in their role as sisters and in their relations to their brothers. I shall be returning to this point later.

Very often it is the women who step on the scene and initiate marriage procedures, the most common form being that a woman leaves her natal home of her own accord and simply sets up residence in her future husband's hamlet. There she will remain obstinately – usually drawing on the solidarity of the hamlet's other females – even against the will of, and the use of force by, her brothers and father, and often to the evident discomfort and shame of the man who has been "secretly" courting her. I write "secretly" because this is

one example of the interplay between back and front regions in society. Everybody in the village knows who is courting whom at the moment; it is common knowledge but it is never broached or talked about openly, that is, it is not public knowledge. In one case I witnessed, a young woman was taken back to her natal hamlet by her brothers six times, first with the use of threats and then with beatings, before the men finally saw the futility of their efforts and gave in. The other men simply smiled embarrassedly at the scene and agreed that when a woman had made up her mind there was nothing in the world that could change it. At the time, the future husband had little to say in the whole matter. A few weeks later, negotiations between the woman's brothers and the husband concerning the transactional aspects of the marriage were initiated. In the end these led to a payment in money. Although the women often play the decisive role in the whole marriage event, as the above case shows, it is later conceptualized and referred to as a marriage based on a transaction and negotiated between men. This, however, is an ex post rationalization and does not authentically reflect what really happened. It is on the basis of a dominant male ideology and the fact that men largely dominate the spheres of exchange and public discourse that this kind of interpretation and construction of an account is possible and granted legitimization[1].

TWO CASE STUDIES

Subsequently I shall describe and discuss two interlinked case studies; to be more precise, they constitute two parts of one longer one. The first part relates to the event of Mahaite Ningaha's parents' marriage and the series of contingent events this marriage precipitated. The second part describes Mahaite Ningaha's own marriage and the way that the legacy of his father's union exercises significant influence on the position Mahaite holds presently and, to a large extent, defines the basis on which he has allocated and organized his material and immaterial resources in his immediate social proximity. The aim here is to show how the effective social form (in contrast to the ideational mould) is produced and reproduced in interaction and in the flow of time. Critical moments of interaction take place in specific exchange events and these constitute the pivotal nodes in the ongoing social process around which relations are patterned and on which social experience is founded, and which, in turn, give the process its structuration.

The first part of the case study describes a complex relationship pattern involving groups of actors from six different lineages: lines A1, E, V, R, Z, M (cf. table 2, p. 56). They are recruited from all the four wards of the village. When in the presentation below, I refer at times to "lineage A1", or the "men of line E", I am not referring to the lineage as a whole but merely to those specific actors involved in the interaction. The six groups can be divided into two sets of three: lines A1, E, and V, on the one hand, lines R, Z, and M on the other. Each triad is involved in a marriage transaction, the linkage between the two triads exists through a ritual relationship between lines V and R. Diagrams often tend to convey the misleading notion of synchronism. It is important to note that we are dealing here with specific events which become interlinked, and combine to form a flow of social process. The diagram thus should be read from top to bottom and from left to right.

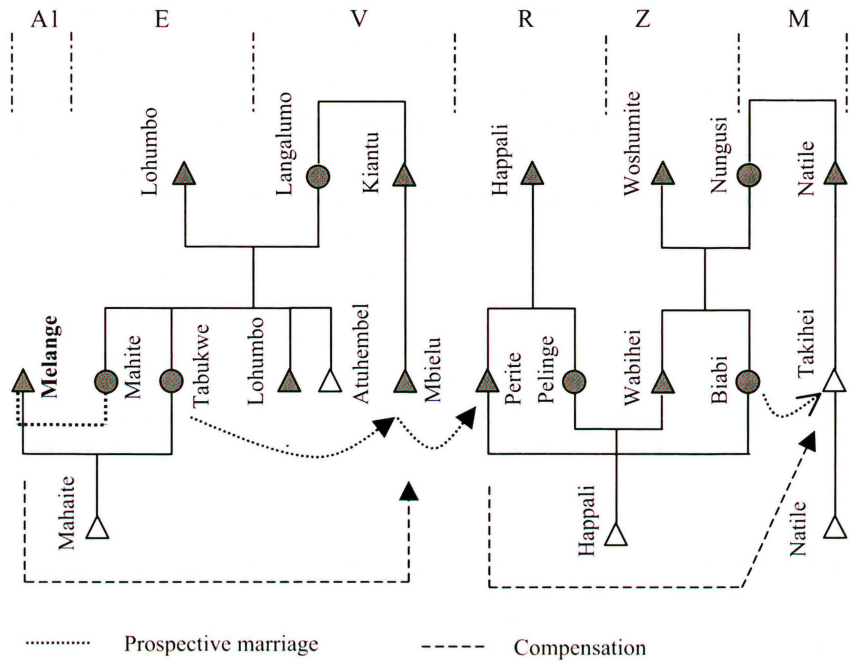

Diagram 10: Melange's marriage and its ramifications

My main reference point concerns the event of the marriage between Melange and Tabukwe, Mahaite Ningaha's father and mother, but in order to understand the events that unfold we must go back a generation and start with the marriage of Tabukwe's parents, Lohumbo and Langalumo. Lohumbo and Langalumo married on a delayed exchange basis, which means that the union was founded on the condition that, in the next generation, a daughter of Langalumo was to marry back to her mother's natal lineage (line V). The union produced three children, two daughters, Mahite and Tabukwe, and one son, Lohumbo. Going back to an agreement negotiated by her father, Mahite was "promised" to the men of line A1, specifically to Melange, whilst Tabukwe was destined to return to her mother's group. Shortly before coming of marriage age, however, Mahite died, upon which Melange, in agreement with Lohumbo, her brother, and with Tabukwe's consent, married her, as a replacement for her deceased sister. After marriage, Tabukwe came to reside in Enniki. This we can take as an instance when an occurrence (Mahite's death) precipitates an act (Melange's marriage to Tabukwe).

In the following, the men of line V demanded compensation for the failure of Tabukwe to return to her mother's lineage. The claims were not made on the men of line E, but on Melange. In due course, Mbielu, the prospective husband, was presented with a pig, two shell rings (*itampinge*) and an unspecified quantity of yam and sprouting coconuts. In the process Melange was supported by a number of close kin and ritual associates from

Warengeme ward, but notably also by Lohumbo, his *meinheil*, and also by Atuhembel, a lineage brother of Lohumbo and, at the same time, Lohumbo's ritual exchange partner. One of the deals between Lohumbo and Melange concerning the latter's marriage was that Melange would in future help Lohumbo in his ritual obligations towards Atuhembel. Thus, Melange, also became Atuhembel's *pinandil*, in conjunction with Lohumbo. At the same time, however, he retained his ritual obligations in his natal ward of Warengeme.

According to the general axioms of marriage – which declares marriage to be an exchange between cross-kin – and at first sight, the transaction presents something of a contradiction since "wife takers" (Melange) and "wife givers" (Lohumbo) join forces and act as the givers of compensation, where one would more likely expect "wife givers" to stand in opposition to "wife takers". The paradox is partly resolved when one considers that Lohumbo's group are not only "wife givers" but also "wife takers", namely in relation to the men of line V. In terms of the transaction, line E is only an interagent, whilst the actual imbalance exists between line A1, who have received a wife, and line V, who originally lost a sister. What follows from this is that the critical part of the exchange, payment of compensation, is relayed to two groups of agnates, who stand in a cross relation to the interagent but are on parallel terms with each other. This configuration, in turn, entails that should any contention develop over the compensation as such, or the amount of the return, it would involve two groups of agnates. Thus, a potential conflict involving a dual set of cross kin (A1:E :: E:V) is deflected on to an agnatic dyad (A1:V). Through such an unintentional mechanism the cultural pattern of agnatic conflict is being produced and reinforced. In the present case any potential conflict was avoided, since Melange is said to have made the prestation shortly after his marriage. One must add that compensation payments of this kind do not always involve two groups of agnates. Due to the irregularities of the kinship system, *alnde erke* payments sometimes also take place between cross kin, as the sequel of the case study will show.

As such, the story of the event of Melange's and Tabukwe's marriage could be concluded here but as I pointed out in the introduction, events of this kind often have ramifications for other social actors. Someone's act is likely to become an occurrence for another person. The critical figure in the appendix to Melange's marriage is Mbielu, Tabukwe's prospective husband from line V. Apparently, Mbielu never had the intention of marrying Tabukwe. Instead, he had negotiated a marriage between the man called Perite of line R, an agnate and ritual partner of his, and Tabukwe, in cancellation of an old debt he owed Perite from an earlier ceremonial exchange. Whether Tabukwe herself knew of this or would have consented to it had she known, is beyond my knowledge. Now that the bride had gone astray, the transaction had to be cancelled, which, however, left Perite without a marriage partner.

Subsequently, Perite arranged a sister-exchange marriage with Wabihei, a *meinheil* of his from line Z, and in conjunction with the two prospective sisters Biabi and Pelinge. As such, the marriage complied with the prescriptions in all respects: it was a direct sister exchange (Perite-Biabi, Pelinge-Wabihei) and conducted between two sets of cross kin. However, the arrangement had a setback. This was that Biabi had been promised in

childhood to a man from Wolhete ward called Takihei (from line M), firstly as a return exchange for Biabi's mother who had married "free" in the previous generation, and secondly, as a reimbursement for a number of tracts of land and sago patches Perite's ancestors had received from a man of Takihei's line, when the former had immigrated to Warengeme from Bunoho. Biabi's marriage would relinquish all claims to the estate by Takihei's people.

In contrast to the previous one, this triad includes three lines which all stand in a cross relationship with each other. Drawing on the support from various kinsfolk and supporters – in this case however there was no explicit mention of support from his *meinheil* – Perite duly made compensation payments to Takihei. The presentation of such *alnde erke* payments took place in a ritualized form and contained a distinct element of ritualized aggression. The shell rings, a long yam, and a coconut were attached to a spear, and, with the spear pointing in the direction of their "adversaries", and with Perite in the lead, Perite and his group of supporters approached Takihei's hamlet in a mock attack. Here they were awaited by Takihei and his line of supporters. Surrounded by Takihei and his men, themselves brandishing their spears, Perite and his followers entered the hamlet, and under much "fighting talk", which involved a mixture of challenges, taunts and insults, Perite removed the coconut from the spear and threw it down at Takihei's feet. Upon this, Takihei took his axe and split the coconut open, thus symbolically relinquishing the claim to Perite's wife Biabi and severing the *permute/ombosahaha* link between Biabi's people and his own. After this, the main part of the prestation, the pig, the yam, the shell rings, and the remaining coconuts were handed over to Takihei and with this the matter was settled.

The sequence of events, which was originally triggered off by an occurrence, the death of Melange's prospective wife Mahite, brought changes not only to the relationship arrangement of those six segments directly involved at the time but also to the members of the subsequent generation and therefore to the diachronic relationship pattern of the members of those specific descent categories. In particular, these changes in the rapport refer to the conversion of the relationship status between three succeeding segments, from a previous cross to a present parallel status. In the diagram this specifically refers to the three men Mahaite, Happali, and Natile, and their immediate lineal descendants. In "constitutional" terms, the three men would stand in a cross relationship to one another but through the events in the preceding generation this has changed. Happali and Mahaite today rank as *nauwie* i.e. brothers, as do Happali and Natile. Mahaite and Natile still rank as *meinheil*, since their predecessors, although involved in the same chain of events, had no direct linkage in terms of interaction. The basis of these fictive siblingships is the projected assumption that they (nearly) shared the same mother, in other words, the reasoning goes that the woman who became Mahaite's mother (Tabukwe), really would have been Happali's mother if the course of events had run differently. On the other side of the kin chart, Happali's mother (Biabi) really should have become Takihei's wife and thus also Natile's mother. Although this never came about, Happali and Natile reckon as if they had the same *ni*.

Today, Takihei is a wrinkled old man, blind and hard of hearing, but Happali still cares for him and provides him with food from time to time, on the basis that he is a "father" to him. In their lifetime, Perite (Happali's father) and Takihei, who originally were *meinheil* to each other, had become very close and had over the years gradually become "like brothers" to each other. In the course of time they switched their terminology and their habitus and became *nauwie* and, subsequently, Happali adapted to this status. Otherwise the father-son relationship is often characterized by distance and a certain degree of strain. It is significant that in this case, where the relationship approximates the ideal, we are dealing with a fictive "fatherhood".

This convention of siblingship relates to the three men Happali, Mahaite, and Natile, the three men's full siblings and their immediate lineal descendants but, significantly, it does not include the classificatory siblings of their descent categories. Thus, with the exception of Happali himself, his two full brothers and three sisters whom he calls, and regards as, *nauwie* and *numandi* respectively, Mahaite stands in cross relationship to the other members of the Bunoho line (R), whilst Mahaite's lineage siblings display a different relationship status. The same goes for Happali in the opposite direction, and also for his relationship to Natile and the other members of his line (M).

Let us return to Mahaite Ningaha and the second part of the case study. When he was still a boy, his father Melange died, upon which Tabukwe, his wife, returned to Talkeneme to reside with her brothers, taking her children along with her. There Mahaite and his siblings grew up in the proximity of their two *agel anheil*, Lohumbo, and Atuhembel who lived in an adjacent hamlet. When Mahaite was still a youth, Lohumbo died, bestowing on Mahaite his estate and his ritual position in Talkeneme. Mahaite became engaged in two ceremonial spheres, in Warengeme, where he had inherited his father's position, and in Talkeneme, where he kawassed with Atuhembel. Subsequently, Atuhembel initiated Mahaite into the *nau* grade of the tamberan, in the last initiation to be held in the village.

A number of years before this, Mahaite had married. Like so many others, he had married "wrongly", since his wife, Haitewa, was actually classified as a *ni* (mother) to him. Whilst still alive, Melange had marked three girls in all for marriage with Mahaite; two of them died in childhood, the third one married before Mahaite was of age. Mahaite had been courting Haitewa, who was from the hamlet of Talke in Wohimbil, for a few months when one day Haitewa ran away to Talkeneme and went to "sit in front of Mahaite's house", a clear sign that she had come to stay. Her brothers attempted to retrieve her twice, before giving up and consenting to the marriage. Haitewa herself had been promised in marriage to a man called Sangarumoi from line V as a compensation for a piece of land that her family had been using (Haitewa's family belongs to one of the recent immigrant lines (P1) in the village). Mahaite himself put Haitewa's obstinacy down to the potency of the love magic he had used.

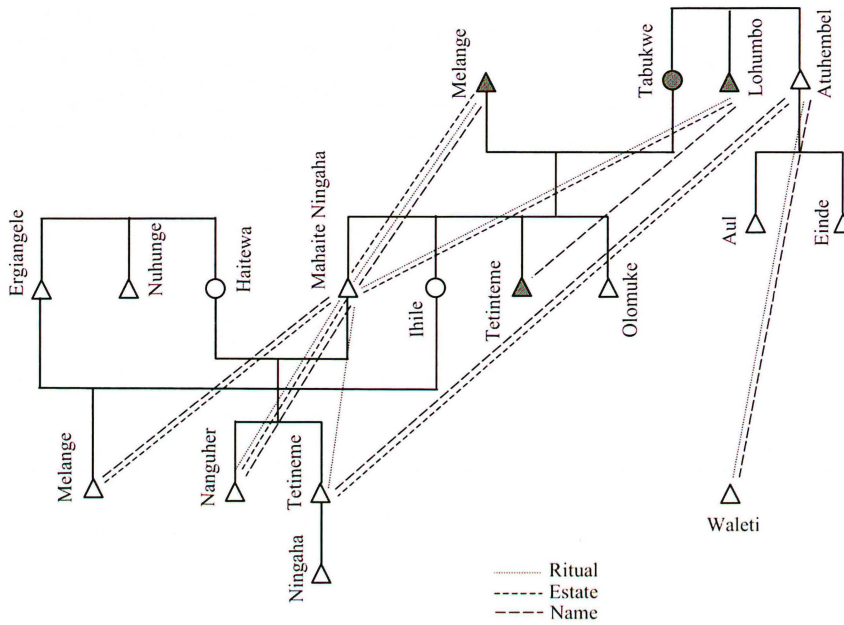

Diagram 11: Transfer of estate, names, and ritual positions in M. Ningaha's kindred.

In the sequel, Mahaite and Ergiangele, Haitewa's elder brother who was already married, negotiated the terms of marriage and came to the agreement that Ergiangele would receive Mahaite's sister Ihile (as a second wife) in exchange for Haitewa and that, in addition, Mahaite would pay 10 A$ – this event took place in the mid-fifties – to Sangarumoi, Haitewa's prospective husband from Wohimbil, for the foregone wife or, however one looks at it, for the land Haitewa's family had been using. The transactions as such, apparently, went smoothly but they had repercussions in a different sector, namely between Ergiangele and his younger brother called Nuhunge. Nuhunge made serious accusations against his elder brother, alleging that he was "using up" their stock of sisters (not shown in the chart) and thus leaving Nuhunge without a sister as an exchange for his own planned marriage. The conflict led to a fight between the two brothers and the conflict has not really been resolved up to this day. Subsequently, Nuhunge in his position as *agel anheil* staked out a claim on one of Mahaite and Haitewa's daughters called Munembili (not in the chart), destining her to later marry one of his own sons (Nuhunge had married in the meantime) in order to balance the debts from earlier days.

When Munembili, flouting this claim, married a man from Tillenge, Nuhunge was furious. When he heard of the marriage, he stormed up to Tillenge and a vicious fight ensued between him and the husband's father Suboki. Tellingly again, Suboki and Nuhunge were classified as brothers. Nuhunge's anger was also directed at Haitewa (but not specifically at Mahaite, his *meinheil*) for letting her daughter marry someone else, and he barred his sister from the use of all her coconut palms in Talke, her place of origin. Later on, this quarrel was put aside but still today Haitewa never harvests these coconuts because she is still ashamed and hurt about the quarrel she had with her brother.

Some time after marriage, Mahaite and Haitewa shifted residence and went to live in Enniki again. They have six children, four daughters, three of whom are married, and two sons, by the names of Nanguher and Tetineme (cf. chapter 5). Subsequently, I shall describe how Mahaite Ningaha has organized and allocated the resources he has at his disposal, where he received them from and how he has deployed them. These resources include various forms of estate, land being the most important asset, names, and ritual positions. The pattern of allotment is intricately linked to the events described in the first part of the case study. The stock of resources Mahaite commands has come from two different sources. Firstly, there are the assets he has received through patrifiliation, secondly there are those which he holds through his matrilateral link to the people of the *butewanga* line (E) of Talkeneme, specifically through his two *agel anheil* Lohumbo and Atuhembel.

The first part is quite straightforward. Nanguher is an ancestral name of the *eilehe* section of the Enniki line. The present Nanguher was given his name by his father Mahaite, and accordingly Nanguher is the successor to both the estate and the ritual position Mahaite, and before him his father Melange, holds in Warengeme. This, we see, is in accordance with the principles of patrifiliation. Mahaite himself has never used any of this land; instead he exclusively relies on those resources he has received through his *butewanga* link.

Tetineme, the name of Mahaite's second son, is an ancestral name of the *butewanga* line. It was bestowed on him indirectly by Atuhembel, Mahaite's *agel anheil* and, at the same time, his kawas. Previously, the name had been given to Mahaite's younger brother by Lohumbo but Tetineme died in childhood and the name, for the time being, returned to the *butewanga*. When the present Tetineme was born, which was after Lohumbo's death, Mahaite asked Atuhembel for the permission to use the name Tetineme, to which Atuhembel consented under the condition that Tetineme would take over the ritual obligations that went with the name, in other words that Tetineme would eventually succeed Mahaite as Atuhembel's and his successor's kawas. On the other side of the bargain, Tetineme will inherit the estate which originally belonged to Lohumbo and which Mahaite is using at present. Here, too, we can discern a patrilineal element, in the sense that Tetineme succeeds his father in terms of estate and ritual position. The disjunction, however, lies therein that neither of the two assets are originally property of their line of origin, but have been transmitted through an earlier matrilateral link. In terms of resources, both Mahaite and Tetineme are "acting as if" they were members of the *butewanga*

lineage. But this is not the case. Although Mahaite is closely linked to his matrilateral kin, both in terms of resources and affection, he would never describe himself as being a member of the *butewanga*.

As to Tetineme, this is even more the case. Whilst Mahaite still has a direct matrilateral linkage to the *butewanga*, Tetineme does not. His own matrilateral ties are to Haitewa's, his own mother's, people from Wohimbil. What will happen with these *butewanga* assets in the future has not yet been decided on. Tetineme certainly has the right to use the land bestowed on him but whether he will then be allowed to pass it on to *his* lineal successor(s) is a matter yet to be negotiated. Tetineme's first son carries the name Ningaha – Mahaite's ancestral name – but whether he will have access to *butewanga* estate or whether he will return to using original *eilehe* estate is an open question. When I asked him, Mahaite said it would be a matter of negotiation between Tetineme and Atuhembel's own two sons called Aul and Einde. Tetineme and Einde have a close relationship. In genealogical terms, Einde ranks as Tetineme's *agel anheil* but in effect they are the same age and, correspondingly, and due to their proximity, they have converted their relationship to being *meinheil*. Tetineme's relationship to the elder brother Aul, however, is purely nominal. According to Mahaite, Einde would probably grant Tetineme's successors the continued use of the *butewanga* assets but Einde himself would have to sort out the matter with his elder brother before giving his consent. If Aul should disagree, the ensuing dissension would primarily be between Aul and Einde, since the former would be placing Einde in an extremely awkward situation in relation to Tetineme. Furthermore, if Aul got his way, Einde would run the risk of losing face, since it would show that he was subordinate to his brother, an admission a man would never make willingly. In the case at present this is a purely hypothetical projection but we again encounter the pattern that an issue actually concerning two cross kin (here Tetineme and Einde) is liable to become a potentially antagonistic affair involving two brothers.

Should Tetineme's successors be refused the further use of the *butewanga* assets, they would have to revert to using the original *eilehe* estate. This option, however, would imply that probably they would be entering into competition for resources with the children of Nanguher, Tetineme's elder brother, since the large part of the *eilehe* estate, which originally belonged to Melange, has been channelled through Nanguher's line of filiation. There is, however, another option open which is also linked to the name Melange.

At present the name Melange is being held by a man from the Womsok lineage (P1). More precisely, it is in the hands of Mahaite's sister's son (at the same time Haitewa's brother Ergiangele's son). The present Melange received his name from Mahaite and with it also a portion of the *eilehe* estate, however, a portion be it noted, which the original Melange never owned himself. The name here only functions as a claim marker. The piece of the estate belonged to a man called Olomuke, a lineage sibling of Mahaite. This man left the village many years ago for Kavieng in New Ireland where he went to work as a plantation labourer. Later on, Olomuke married in New Ireland and it became evident that he probably would not be returning to the village. Not wanting to leave the estate unclaimed – in this way he would be making it, or at least parts of it, susceptible to a take-

over by third parties – Mahaite decided to allocate it to someone of his own choosing. When his sister Ihile gave birth to a son, Mahaite gave him the name Melange. Melange now holds the title over Olomuke's land and sago but he did not take over Olomuke's ritual position. Melange himself is engaged in the ceremonial system of Wohimbil, his natal ward, but he has supported Mahaite in his kawas obligations on several occasions in the past. Here, too, it is still undecided whether Melange will be allowed to pass on the *eilehe* name and estate to his own descendants. At the time of research this appeared more than doubtful, since Mahaite had severed relations with his sister and her husband due to altercations concerning other matters, and this also rubbed off on the relationship with his sister's son.

The last point concerns the ritual positions Mahaite holds. At present Mahaite ranks as bruk lain, which means he is engaged in two ritual spheres: in Warengeme on the one hand, in Talkeneme on the other. His *pinandil* in Warengeme ward is a man called Alesi. Alesi himself is actually a man from the neighbouring village of Luwaite, where he also lives. Alesi is a matrilateral descendent of a section of the *petule* line (S) which used to belong to the original ward of Enniki and with which Mahaite's father's father and father used to ceremonially exchange. But all the men of this section died about two generations ago, and the ritual position was channelled to a sister who had married to Luwaite, and now it is this sister's son, Alesi, who holds the position and kawases with Mahaite. Mahaite's first-born, Nanguher, will take over this position.

In Talkeneme, Mahaite's ritual partner is Atuhembel. Mahaite took over the position which originally was held by Atuhembel's lineage brother Lohumbo. Mahaite himself will transfer his position to his son Tetineme, following the agreement with Atuhembel. So we have the line of transfer Lohumbo-Mahaite-Tetineme. On the opposite side, Atuhembel will pass on his position not to one of his own sons (they have been allocated differently in Talkeneme), but to a young man from Wohimbil ward, to whom Atuhembel gave the name Waleti, an ancestral name of the *butewanga* of Talkeneme. Waleti belongs to the *butewanga* lineage (line U) of Wohimbil. As I pointed out earlier, the two *butewanga* lines (lines E and U) recognize a faint agnatic bond but they rank as two completely separate *alamel piressi* and profess separate *nengele tuhalmbe*[2]. Thus, should at some time in the future the tamberan be revived, Tetineme and Waleti would ritually exchange with each other. What is so significant here is that within a span of two generations, a purely lineage internal ritual relationship (between Lohumbo and Atuhembel) has been transferred out of the lineage completely and is now held by two men who, basically, have nothing in common with the Talkeneme *butewanga* line. By origin, the two men are not even men of Talkeneme but in ritual terms they belong to this ward. At the same time, however, the appearance of an intra-sibling ritual relationship is sustained through the circumstance that both men are bearers of *butewanga* names.

THE CASE STUDIES IN CONTEXT

As I indicated earlier on, and as I hope to have shown in the above case study, lineages do not constitute descent groups in the usual sense of the term; instead they function as

social reference categories. They fulfil the task of social positioning within the confines of the social universe. Lineages constitute aggregates combining allocative resources in material and nonmaterial form, historical experiences, and past and living personnel, who, in ideational terms, share common substance which has been transmitted through patrifiliation over the preceding generations, and who take a common stance in relation to their natural and social environment in spatio-temporal terms. But the issue of corporateness is essentially lacking in the Wam notion of lineages.

The relationship of the individual to his lineage is more one of participation than of inclusion. Paraphrasing this standpoint one could say that a social actor is more inclined to say "I partake in this lineage" than "we all belong to this lineage". He readily acknowledges that others belong to the same entity but this does not imply undivided loyalty to his lineage mates nor does it mean that he derives his unconditional identity from his association with these others. This is often difficult, if not even impossible, to attain, because members of the same lineage do not have identical rapports to members of other, like, aggregates. As the example of Mahaite Ningaha and his relation to the Bunoho people (line R) shows, whilst he himself stands in a sibling relationship to one segment of the Bunoho line, his own lineage siblings have a cross relationship to that specific section. Thus it is shown that due to the practice of terminological splitting, the lineage as a whole does not share a common viewpoint in relation to others. Given the basic differences which exist in the perception of, and habitus towards, parallel and cross kin, the lineage would also find it hard to organize and undertake collective action. (cf. chapter 3).

Moreover, actors find it hard to mobilize and sustain undivided loyalty towards their lineage siblings, since it is precisely these men with whom they contend for limited resources. Although the ideology of siblingship declares that lineage brothers not only have substance in common but also share their stocks of resources, practice reveals a different picture. Agnates enter into competition with each other for scarce productive goods such as land and sago patches, or immaterial resources such as titles and names. Women, too, are likely to become the source of contention between brothers, as the example of Ergiangele and Nuhunge above shows. Through arranging Haitewa's marriage with Mahaite, Ergiangele deprived Nuhunge of a sister, on whom the latter himself was reckoning for the arrangement of his own marriage. Nuhunge's anger was not directed at the man who married Haitewa, i.e. Mahaite, but against the man who "gave her away", i.e. his elder brother.

Nevertheless, not all sibling relationships one encounters are contentious or antagonistic. Mahaite and Numbia for instance, his co-resident from Enniki, were *nauwie* and they were on the best of terms with each other, and there were numerous other pairs like them. At the same time one does find that sibling bonds usually comply best with the ideological notions of siblingship in those cases where the bond is purely fictional and where there is no direct source of contention because the two men concerned have no stock of resources in common. Potential antagonism is at its highest between classificatory siblings of the same descent category, that is between father's brother's sons and father's father's brother's sons.

When, on occasion, lineages do appear to step into action collectively, in the form of a group of agnates – for instance on the occasion of funerals – experience shows that the operative unit invariably includes nonlineage agnates as well, whilst, at the same time, actual lineage members are conspicuously absent from the scene and in no way feel compelled to participate. When agnates do come together in this form it is on the basis of perceived bonds of siblingship and not lineage membership. The two notions are interrelated but they are not the same thing. In public discourse, for instance in the context of land disputes, no references are ever made to the lineage as a whole. Common descent from a single *nengele tuhalmbe* (apical ancestor) is never addressed in order to express or invoke the unity of the lineage. When ancestors are brought into play, it almost invariably happens in such a way that an actor traces back his own personal link to the specific predecessor. He is not concerned about who else can establish equivalent links, in fact the fewer that can, the better.

In general, genealogical knowledge is low and so is the cognition in reference to the system of *alamel piressi*. In tracing descent, the notion of paternity and maternity, and the sibling relationships in the preceding generation are important. When stating their relationship to others, individuals do not go by lineage membership but refer to the preceding sibling relationship which unites them: the elder (younger) brother "carried" him, the younger (elder) brother "carried" me, or, in a cross relationship, the elder (younger) sister "carried" me, the younger (elder) brother "carried" him. Significantly, when two men wish to emphasize their positive sibling relationship, they are more likely to trace their linkage through a common sister link than through a brother pair: the elder sister "carried" me, the younger sister "carried" him. The notion of common motherhood and nurturance is more valid for signifying the positive aspects of siblingship than the idea of having male substance in common.

The individual actor enjoys a high degree of freedom in the shaping of his personal spectrum of the social environment and also in the manner in which he deploys the allocative resources at his disposal, as the example of Mahaite Ningaha shows in the above case study. They constitute the foundation of a man's claim to personal autonomy. Without adequate access to basic resources, an individual will find it hard not only to meet the obligations that ongoing informal and formal transactions impose on him but, also, to actively build up his own spheres of relatedness through organizing, and engaging in, exchange relationships. People who try to hinder him in using and deploying these resources as he strategically plans to do are depriving him of his means of exercising autonomy, and impeding him in his struggle for equality with the other men of his social universe. Thus, the real contest in the ongoing struggle for equity does not necessarily take place in the actual exchange events themselves, which create relations of equality, but in the preceding stage which involves struggling for, and securing access to, the resources necessary to engage in transactions, against envious siblings and other agnates who are trying to exploit the resources for their own purposes.

A man is not directly accountable to his agnates for the way he manages, allocates and disposes with the resources he commands. However, his next of agnatic kin, i.e. his father,

his full siblings, his sons, and, with declining legitimation, also his father's brothers and their sons, do hold residuary claims. Brothers and other agnates are a category of kin in the selection of which one has no immediate say. They are "given", they are not necessarily those relatives with whom one seeks proximity, or to whom one turns to in search of support or in order to build up a meaningful relationship as one does with a *meinheil* or an *agel anheil*. Nonetheless they are meaningful relations but, beyond the realm of ideology, the meaningfulness is charged with negative connotations. It is up to the individual to find his place between his siblings and negotiate acceptable terms for a peaceful co-existence with them which entails amongst other things staking out one's claims of autonomy clearly and, from an early age on, resisting attempts of domination by elder siblings. Often the relationship between brothers is dependent on how a father in the preceding generation has divided up his assets and distributed them between his sons and others of his own choosing. Mahaite modestly prided himself on having done this well. His sons, he maintained, would not have to contend with each other for resources, since he had divided up his estate clearly and well before his death. Admittedly, in this sense Mahaite was in a favourable position because he had abundant resources at his disposal and only few siblings (some of which were no longer living in Warengeme) to contend with. Other men with large families were in a less favourable position. This is especially true of those people who belonged to recent immigrant lines in Wohimbil and Warengeme wards. When a man has not allocated his resources clearly prior to death, these are liable to become the objects of prolonged and contentious negotiations and disputes between his sons and his own brothers, and often leads to open conflict between agnates. With this in mind, men usually make provisions early on in life to safeguard the transmission of resources to successors he has personally selected or, at least, consented to.

Very often, however, titles and rights, through naming, to different kinds of resources do not make for clarity in terms of ownership and one finds that a piece of land is being claimed by two or more people through different channels. This, for instance, is frequently the case when long-term usufruct by one party stands against a name claim by a second party. Moreover, ancestral names are subject to theft, manipulation and alienation; for example, when a name lent out in a previous generation is never returned to the original owners but instead is transmitted down the line which borrowed the name. Thus, Atuhembel, the name of Mahaite Ningaha's *agel anheil*, is really a *saharampe* name (line B) which was lent to the *butewanga* several generations ago and was never returned. At the present this is not an issue under discussion but theoretically a member of the *saharampe* line could one day demand back the name and also the tract of land that originally went with it. During the time of research there were a number of serious disputes in progress in all four wards of the village between groups of siblings over the possession of specific ancestral names. In one case, for instance, a man of the *tineme* of Talkeneme (line D2) was obstinately demanding back a name his agnates from the *ereme* line (D3) were accused of having alienated and inserted into their own genealogical chart three generations ago, and upon the strength of which they were now claiming various land tracts linked to that name.

In view of the absence of any form of superordinate authority to which the task of allocating resources and reconciling contesting claims could be delegated, the question of the power of the individual becomes a critical issue; power understood as the transformative capacity a social agent commands and through which he is able to take influence on the course of events in the world in relation to both his natural as well as to his social environment (cf. p. 35). Power is located in, and delineated by, an agent's command over stocks of allocative and authoritative resources. Having a nominal claim over a tract of land (allocative resource) is one thing but, in view of the ambiguity of claims, attaining and holding a position in which he is capable of gaining access to, and exploiting, his claim is often quite a different matter. To achieve this an actor draws on his authoritative resources which, amongst other things, include various forms of knowledge – knowledge concerning the history of the item being claimed, of the pattern of relationships linked to the specific item – managerial qualities (for mobilizing support for his claim) and rhetorical skills.

Although every conflict ultimately involves the issue of power, the exercise of power does not necessarily entail the emergence of conflict. The issue of power flows into the constitution of practically all social relationships because social positions are not unalterable and because, with very few exceptions, form and content of the relationship are subject to negotiation. Returning to the case study, we see how Melange "changes the course of events in the world" when he marries Tabukwe after the death of his prospective wife Mahite. Tabukwe was originally destined to return to her mother's group in marriage. However, Melange intervened and was able to exert influence on Tabukwe's brother Lohumbo – this did not entail the use of force in any way, Melange simply was able to persuade Lohumbo to comply with his intentions – who gives his consent to the marriage under the condition that Melange assists him in his ritual obligations towards Atuhembel his *pinandil*. As we have been able to follow, this act precipitates a series of subsequent events, in the course of which the agents concerned have to adapt to the novel situation and themselves renegotiate the terms of their relationships. Mbielu is unable to "transfer" a wife to his kawas Perite, whereupon the latter, together with his *meinheil* Wabihei, organizes a sister-exchange marriage ignoring the precedent arrangement agreed upon by their predecessors that Biabi was to marry back to Takihei's line. Here, too, we can say that Perite is exerting power.

Less spectacular, and not explicitly referred to in the narrative above, is Melange's and Perite's task of negotiating and organizing the prestations to Mbielu and Takihei respectively. Here too they have to draw on the resources, notably in motivating their supporters to make contributions to the transactions. This evidently also involves the notion of power, since it demands that actors try "to get others to comply with their wants" (Giddens 1979:93). In the next generation, matters take a turn in the context of Mahaite's marriage. Significantly, this time it is a woman, Haitewa, who exerts power, by passing over an arrangement devised by her father and brothers who planned to use her as an exchange for a tract of land, and going to marry Mahaite. Mahaite is forced to react and subsequently arranges an exchange marriage with Ergiangele who, in the course of events,

exerts power to an extent where he infringes on the domain of his younger brother Nuhunge and thwarts the latter's marriage plans.

One of the points I have been trying to make in narrating this lengthy and complex case study is to show clearly how the effective social form is produced and reproduced in, and through, interaction by consciously acting social agents. They do not merely conform to, and follow, a superimposed societal design in their actions; instead they actively and continuously constitute and shape the social order of which they are a part. Agents are consciously acting because they are following both short-term tactics, adapted to the logic of the situation they find themselves in, and long-term strategies, and because they show competence in applying generative rules and in drawing upon their resources in instantiating action. In the context of marriage, for instance, the rules do not so much refer to the axiom that marriage should take place in the form of a sister exchange, more to the point, they involve an actor's knowledge and competence to attain his aims otherwise but, at the same time, effecting it in a manner which is compatible with the general principles and themes of society. It is the acts – the events where rules and resources are instantiated – which are critical for the process of social formation. The social system – seen as a system of social interaction – acquires structuration through the unfolding of a series of events of intended action but having unforeseen consequences. The events bind time, they also create social linkages in time and space.

In the first part of the case study we encounter five such major events. The first refers to Melange and Tabukwe's marriage, secondly we have the payment of compensation to the relinquished husband Mbielu. This event, thirdly, is followed actually by a non-event, namely the failure of Mbielu to provide his kawas Perite with a wife, the fourth instance is the sister-exchange marriage perfected by Perite and Wabihei's sibling group, the fifth, and last, event refers to the prestation made by Perite to Takihei. The decisive aspect to be noted here is that each event serves as the precedent for the interaction of the one following it. It provides the lead for perceiving and interpreting the present social configuration, upon which agents rationalize, organize and initiate their own interaction in which they again, in turn, impart structure to the process. Every event creates a new configuration but it also draws on the continuity of the past which supplies the rationale and means of its instantiation. The social practices produce this continuity. They become manifest and are reproduced in the moments of their instantiation, in events where agents go into action and where structure acquires a virtual existence. Structure is the outcome of action – of actors' interventions in ongoing processes – whilst at the same time action presupposes structure as a necessary condition of its production. Thus, structure is both the medium and outcome of the reproduction of social practices. It is this kind of essential recursiveness of social life which Giddens terms the duality of structure.

Actors evidently command substantial knowledge about the conditions of their social system – located in Giddens' sphere of practical consciousness – and are versed in the practices that constitute its order. But they do not act with the aim in mind of intentionally reproducing those conditions. I think it is safe to say that, after his marriage, Melange was primarily concerned about how he was to raise and organize the *alnde erke* payment to

Mbielu, where he would receive support from, and how he could motivate others to contribute to the transactions. He was not over concerned about the ramifications his act had for others beyond the circle of people immediately involved in the marriage and compensation payments, and he certainly did not waste a thought on the idea of what effect his act would have on the social order as a whole. His task consisted of bringing his action into line with the mutually acknowledged form of social practices and making it compatible with the pervasive societal themes of autonomy and equality. Actors consciously apply this knowledge and their understanding of the mechanisms of the codes they adopt in the production of their activities. It is aimed towards the purpose of achieving an intended outcome but it is not consciously directed towards reproducing the conditions of the social system. Thus, the effective or virtual social form which is produced and reproduced in the flow of time is an emergent property of human action and interaction. The order of the social system is the unintended outcome of agents organizing and producing activities, the pivots in this ongoing process being vital formal exchange events. It is in this connection that Bourdieu's (1977:79) witticism is to be understood: "it is because subjects do not, strictly speaking, know what they are doing that what they do has more meaning than they know."

As we go through the case study we witness how the events either create new sets of relationships, or lend existing ones a quality and intensity which they did not necessarily display before. When Melange marries he not only vitalizes an existing cross relationship, he also enters into a new ritual partnership. Amongst others, it is the members of this partnership who help him to organize the exchange with a group of agnates from Wohimbil. The prestation not only ratifies his marriage, it places his relationship with Mbielu on a new footing. The close relationship formed between Melange and his associates from the *butewanga* line is carried over into the following generations and becomes a defining factor for the position of Melange's successors. The sister-exchange marriage between Perite/Biabi and Wabihei/Pelinge transforms a nominal cross linkage into a meaningful affinal relationship. Through the resultant *alnde erke* payment Perite enters into a close bond with Takihei, which in due course leads to a conversion of their relationship status from a cross to a parallel relation. The transformation, in turn, has ramifications for the succeeding generations.

In reviewing this process it becomes evident that the notion of descent is not one of the primary structuring principles. By peeling off layer after layer of variations one could, I suppose, arrive at the interpretation that the people are acting on the basis of a descent model, simply displaying an exceedingly high degree of flexibility. But in my opinion this would be stretching and bending the facts into a prefabricated mould which the villagers themselves – although descent categories are existent – do not refer to in rendering accountability for their mode of action, or in explaining their behaviour. This does not invalidate the idea of filiation, specifically patrifiliation, as a constituent factor. The Wam, naturally, certainly recognize that through procreation one generation succeeds the next and that, according to the conception theory, sons possess the same substance as their fathers and their fathers before them. But this theme is not extensively elaborated and

developed into an ideology invoking togetherness and identity on the basis of common descent from a founding ancestor, or into a functional principle for effecting collective action. Substance alone is not capable of living, it needs nurturance. Moreover, it is incapable of self-reproduction, which entails that linkages have to be established to those who can facilitate reproduction and provide nurturance. The linkages, in turn, are contrived on the basis of the exchange of foodstuffs and valuables. It is these linkages and especially the events in which they are instantiated, the transactions, which represent the decisive nodes in the process of social formation. In this context, I should like to recall Burridge's remark (1979: 230) that in Melanesia dogmas of descent, kinship and group membership are backgrounded against the significance of the event, "particularly the transaction, the exchange of foodstuffs and valuables". It is the enactment of the events which mediates relatedness and makes its nature manifest. The Wam certainly appear to comply with this observation.

The critical intersections of the social system are represented by the events of formal transaction, where groups of agents focused on a principal figure, the main transactor, make prestations of foodstuffs and valuables to others. What stands out, however, in this process is the flexibility and commutability of the spheres of formal exchange. Conceptually, these spheres are distinguished and held apart. Naturally, the people know that a marriage transaction is something other than a death payment, and also that a ceremonial exchange is a different thing from a marriage. But in practice, as the case study shows, these spheres are not held strictly apart. They tend to flow into each other and are condensed. Debts stemming from one sphere are balanced with a payment in another one. In Melange and Tabukwe's marriage, part of the arrangement states that from then on Melange is to become Lohumbo's associate in his ritual partnership to Atuhembel. Thus, marriage is recompensed through accepting a ritual obligation. Mbielu and Perite agree to square up a ritual debt through a marriage. In one single prestation made to Takihei, Perite settles his debts stemming from his marriage to Biabi and, simultaneously, recompenses Takihei for some land his forefathers had once received from Takihei's people. We also heard that, in the next generation, Haitewa, Mahaite's wife, was originally destined to marry a man called Sangarumoi as a compensation for land which Haitewa's family had been using.

This is possible because, although the contexts are distinguished and different, the transactions themselves convey the same message and carry the same meaning. Exchanges always centre on the pivotal issue of the provision of life-sustaining nurturance. What form this provision takes on is of secondary significance. It can assume the shape of highly valued food products, in the main pigs and yam; it can refer to the endowment of valuable productive resources, land in this case being the most important asset; or it can take on the form of reproductive resources, that is women to whom the nurturing capacity is inherent. Unlike commodities, where the value of one item is expressed in the form of the other, the gift exchanges with which we are dealing here express the relationship between the transactors themselves. The transaction not only involves the transfer of valuable material or immaterial goods from one party to the other, which in itself is an important aspect, the

exchange also carries meaning. It creates and expresses the mutual acknowledgement not only of the transactors' status as men – formal transactions are a clearly male-focused sphere – it also signifies the mutual recognition of their status as equals. When a man makes a prestation to someone he is providing him with the potential for growth and strength, he is granting him the basis of becoming a good hunter, a skilled gardener and grower of yam, a brave warrior, or that his sons grow to become valid and renowned men. It is effected on the rationale that his opposite will do the same for him, either simultaneously or at some point in the future, and thus grant him the same potentials. Transactors are altruistically promoting each other's autonomy, they are strengthening each other by providing each other with sustenance. In the highly competitive atmosphere of male relationships, the mutual provision of nurturance is the ultimate form of displaying acceptance and equality.

In what context this takes place is secondary to the effective enactment of the exchange. The primary emphasis is on the event of the transaction itself. Returning to the case study of Melange and Tabukwe's marriage, we see that not only does each event create the precedent for the subsequent one, the unfolding chain of events takes on the shape of an interlinked series of equality-producing events. This is actually the critical step: the creation or sustainment of equality. Regarding the series on a purely give-and-take basis we find that at the end of it, the principal interactors end up on an equal standing. The outcome of the series is equality between the primary agents: Melange receives a wife, Lohumbo gains a helper in his ritual partnership, Mbielu receives compensation for a relinquished wife, Perite and Wabihei exchange sisters, and Takihei is recompensed for the wife he did not get and for the estate that had been alienated. The only debt that is left open and not accounted for is the one between Mbielu and Perite. I am not aware of how this in the end was reconciled. There was no evidence that the partnership was severed after this, so one can assume that the balance was offset again within the ceremonial sphere at some later date.

The transactions constitute the hubs of the social process. The picture that unfolds does not display a pattern where clearly delineated, corporate groups engage in exchanges with each other. It is more the other way round: actors group into social formations around exchange events. The conceptual vision sees these as groups of agnates who pool resources and engage in formal transactions with like groups of agnates. But, again, practice conveys a different picture. The group, centred on the principal transactor, acts as a group of agnates although they invariably include kinsmen of the opposite category as well. The pregiven classification of the interactors in terms of kin categories is superimposed by the codes they adopt in relation to the exchange event. Within the context of the transaction, men on the same side of the transaction become "sharers" in relation to each other, whilst classificatory siblings are liable to engage in formal transactions with each other should the circumstances of the event dictate it. Thus, for instance, Melange's marriage to Tabukwe precipitates a formal transaction to a classificatory sibling of his, Mbielu, whilst, at the same time, his newly gained affines support him by making contributions to the prestation. In this case we see that practice runs completely contrary to the orthodox notion of

exchange and sharing. This kind of adoption of a different habitus – e.g. when cross kin adopt a code of "sharing" with each other – is usually limited to the period of the event itself with its three phases of pooling the resources, the transaction itself, and the subsequent distribution. After this the actors go back to their original habitus in their dealings with each other. However, if for some reason or another the intermediately adopted code is upheld for a length of time, it is quite possible that the two actors concerned will transform their original status. Agnates who recurrently engage in formal exchanges with each other are likely to become *pinandil*, while cross kin who institutionalize a code of sharing will gradually come to regard each other as brothers. Very often this step is marked by a switch in the use of kin terms: *meinheil* become *nauwie*.

Throughout adult life individuals are engaged in exchanges. Men rank as the transactors but the role of women is indispensable since they contribute heavily to the production of the valuables the men later exchange. Each actor is embedded in networks of relatedness. In some he himself represents the hub, in many others he participates as an associate and helper of others. The transactions, of both the formal and informal kind, constitute a flow of events, interweaving multiplex networks, binding them in time, and forming a dense system of reciprocities which contributes to social cohesion.

DEATHS UND FUNERALS

The death of a member of the community threatens to interrupt the continuity of social relatedness and disrupt the web of linkages of which the deceased person was a part. The person's relatives and associates face the task of reknotting the network and spanning the void his death has left. In order to sustain a necessary degree of cohesion, the linkages to various significant segments of the social universe have to be renewed and reconfirmed, first and foremost those to the person's different cross-kin sections and ritual associates, while, at the same time, the positions and roles within the deceased's immediate agnatic surroundings have to be newly defined and negotiated. Thus, for the working order of the social system and for the issue of social integration, the occurrence of a death is a critical moment and the ensuing funeral a central event. Funerals have the important function of transcending the finity of human time.

Death is announced to the wider public by beating the deceased person's name and ward affiliation on the slit-gong (garamut, *wahute*). The news is passed on to kin living in more remote areas or distant villages, again through the use of slit-gongs or by "hollering" the news from one mountain ridge to the next. The body is laid outside on the hamlet plaza. In due course the first mourning relatives arrive, commencing their weeping and wailing well before reaching the place of death. Men and women touch, hold, and caress the outstretched body; they grieve and cry, and amidst tears and sobs recount past memories, professing what a good and valuable kinsman or kinswoman the departed had always been to them. The appearance at the funeral itself, one's demonstration of grief and sorrow, and not shying away from physical contact with the corpse are important issues. Except sometimes in the case of very young children, death is hardly ever put down to natural

circumstances; instead there is always a causative agent seen to be involved somewhere. Who appears at the funeral and who behaves in what manner is unobtrusively, but carefully, registered and recorded. People who remain absent altogether or conspicuously avoid physical contact with the corpse – out of fear that the dead body might emanate some kind of postmortem physical reaction – are making themselves suspect to being somehow involved in the death, and most likely they will have to account for their behaviour later on when the theories concerning the cause of death are spun and the first hypotheses are tested.

If the deceased person was a "man of the tamberan", i.e. if initiated, his ritual associates will make a special appearance, their bodies and faces smeared with mud (*mianke*), and dance around the outstretched body expressing their grief in ritual chants and recalling what a renowned tamberan man the person had been. If the man was from the *ambuli* section, the *ambuli* men will make the first appearance, followed shortly afterwards by the *pengame* section, and vice-versa respectively. Each section is headed by its ritual seniors and bigmen. By this time the hamlet is usually crowded. Afterwards the body is taken back to the house, washed and adorned. Today the body is wrapped in a clean white sheet. In earlier days it was decorated with the person's ritual attire, consisting of a variety of shell-ring necklaces, arm-, head-, or waistbands (for women). Prior to the colonial era, the body was buried in a shallow grave next to the person's dwelling house. The grave was covered by a low roof made of the midribs of sago palms. The Australian administration forbade this form of burial and ordered the villagers to establish communal cemeteries, where the deceased were to be buried in coffins. The body is buried not more than twenty-four hours after death.

The funeral party remains in the deceased's hamlet for several days and in the case of the death of a prominent person, even for weeks. During this period the first questions arise and the first inquiries are made as to the circumstances of death and its possible causes. The right to raise questions concerning the death falls to both kin sections. Parallel kin often see in the death of an agnate a latent threat to their own lives; cross kin suspect the cause of the death to be lodged in the contentious circle of agnates. Usually no conclusions are reached at this early stage. It marks the beginning of a long process of elucidation and usually it is a matter of weeks or months before a valid theory is established and it may be that accusations of sorcery are raised.

Also in this period between burial and final funeral feast falls the task of erecting the commemorative mast for the deceased person, called *takil* for men and *lenke* for women. The *takil* is a vertical contraption consisting of a bamboo pole and the midribs of sago palm fronds (pangal). At the foot of the mast a table-like construction is erected on which the deceased personal belongings from everyday life are exhibited. Attached to the mast itself are the man's various ceremonial insignia and tokens of his skill as a hunter and as a grower of yam. These include such paraphernalia as knotted ropes (*samel*) where each knot represents a (domesticated) pig given away in exchange. Also included are numerous midribs of coconut palm fronds (*saleigwo*) which indicate the number of wild pigs the man is said to have killed and exchanged. In earlier days a similar device marked the number of

slain enemies. Attached to the mast are also the so-called *wate*, cane rings showing the girth of some of the prize yam the man grew (and gave away in exchange) in his lifetime; also displayed are the *mahate wangul*, large bamboo rings (up to a diameter of over three metres) marking the circumference of the containers in which, on the occasion of the *serengel pinandil* feast, the short yam (*melehei*) are heaped and displayed before distribution. The so-called *sinime wangul*, which are also attached to the mast, are bamboo poles used to measure the height of the yam heaps.

The *takil* mast serves two functions. Firstly, it is erected to commemorate the deceased man and call to memory all his outstanding deeds as a man in general, and as a tamberan man in particular; secondly, it serves as a device for calling in outstanding debts, primarily those resulting from ceremonial exchange. The number of pigs and yam in arrears are displayed in symbolic form, signified by a variety of croton leaves (for various types of yam) and leaves of the wild and domesticated taro for wild and domesticated pigs respectively. The open debt is not a matter that is broached publicly but it is common knowledge to whom the signs are directed. The task of erecting the *takil* does not fall to any particular category of kin. Specifically, it is the man's closest relatives and friends from his bilateral kindred and his associates from his *serengel pinandil* who take over this responsibility.

A woman's *lenke* fulfils very much the same functions as the men's *takil*. The *lenke* is of a different form. Instead of a vertical contraption, usually a small tree or large bush standing in the hamlet is fenced off and adorned with the woman's personal belongings and the implements she used in her daily chores of garden and domestic work, such as her limbum (*luhe*) carrier bags, or her earthenware cooking pots (*marme mianke*). The *lenke* is erected by those men who feel especially indebted to her for all the work she contributed and whose renown as exchangers is to a considerable degree based on the work the woman did. These include either her own husband, her brothers, or, if she died young, her father. Very often the *lenke* is adorned with the same type of symbols as a man's *takil*. They serve as writs to the *pinandil* of the man or men responsible for erecting the *lenke*, summoning them to make a contribution to the forthcoming funeral feast: if it were not for this woman, the encoded message goes, I could never have given you so many pigs and yam as I did.

During the first few days and weeks after death, the deceased's spirit, *malehe*, is believed to remain in the vicinity of the living. The relatives symbolically block all paths leading to and from the hamlet so that the *malehe* does not go astray but remains among its people. Often the spirit makes its presence manifest by giving off signs, piksa (pictures) in Tok Pisin. The occurrence of surprising events or small mishaps, such as the cracking of a branch in the nearby bush, the breaking of a cooking pot, or the unexplainable disappearance of some implement is interpreted as the doings of the *malehe*. The spirit in this manifest form is called *amberi*. Such signs are observed and registered closely. The people believe the deceased person is trying to communicate something to his descendants which he was unable to say before dying, and these piksa are taken as possibly valuable clues in the search for the causation of death.

As mentioned above, mourners gather in the deceased's hamlet and often stay there for a considerable length of time. They are showing their attachment to, and their grief for the loss of, a deceased kinsman. In return, they expect to be sustained and fed by the deceased's family and close kin during their sojourn in the hamlet. This is always a burden on those concerned and, at times, and depending on the season and the ritual calendar, it can prove to be an excessive strain on the family and set them serious problems. The mourners often bring along small tokens of food but this is never sufficient to sustain the gathering for any length of time. Moreover, conventional practice demands that the hosts supply their guests with highly valuable foodstuffs, i.e. with pigs and yam. Coming to terms with these problems shows who is really a close kinsman and associate, irrespective of his status as either cross or parallel kin, or of lineage affiliation, and who carries a kin term as a nem nating. Furthermore, this kind of bottleneck is often overcome through the agency of the flexibility of the exchange system and the commutability of the exchange spheres. Funerals are opportune occasions for calling in outstanding debts, or, seen from the other side, reciprocating prestations received earlier and, possibly, in a different exchange sphere. Men frequently take the opportunity to square up a debt resulting from a land transfer, a ceremonial exchange, or a marriage, by supporting the deceased's kin group with a pig and other required foodstuffs which are then distributed to the funeral gathering. Given the fact that the making of prestations constitutes the basis of the attainment of prestige and status, men are also likely to take advantage of the opportunity and voluntarily contribute a pig to the funeral proceedings even though their immediate rapport to the deceased person would place them under no obligation to do so. In view of the large gathering of people, the connotations the events of funerals have, and the significance of performance in public, such gestures of generosity are liable to significantly enhance the reputation and standing of the donor. This kind of pursuit of self-interest does not rule out the possibility that, at the same time, the donor is hallowing and expressing a close bond of friendship with the recipient, but it is equally possible that he is acting in this way with a clear strategy in mind, and that, for instance, he is building up his account of credits in view of a future prestation of his own, where he will be able to call on the support of his debtors. It is in this kind of management of resources and manipulation of social ties that bigmen excel.

Where the spirit goes after finally leaving the domain of the living is not clearly specified. The people say the *malehe* travels west towards the setting sun but I was unable to elicit whether the people had any explicit belief about an after-life or a realm of the dead[3]. In social terms, however, there is the very clear notion that the body of the deceased has to "return" to the mother's side, i.e. the person's cross-kin section, from where it once sprung in birth. All the procedures in relation to the dead body and the actual burial are in the hands of cross-kin relatives. When the body is brought outside, it is placed on the outstretched legs of the man's sisters and sisters' daughters, who sit in a double-row facing each other. When a women dies it is her *kwalinei* (female cross cousins) and their daughters who perform this task. The same women, later, wash and dress the corpse whilst, in the meantime, the corresponding male cross kin – *meinheil, ningal anheil* in the case of

men, *nauwie* and *ningal anheil* in the case of women – make the coffin and prepare the grave. The observant reader will have noticed that the above passage contains a contradiction, namely in relation to the roles of brothers and sisters in the context of burial preparations. In terms of strict kin classification, brothers and sisters rank as parallel kin but in this specific context they are associated with the opposite category.

From the viewpoint of men, sisters are a vexing category. They are women who share substance with their brothers but the offspring they bring forth are of a different substance. Due to the incest taboo, brothers cannot marry their own sisters, instead they have to "give them away" in exchange for wives, and in doing so they officially forfeit all claims to them. Through marriage, sisters undergo transformation from a parallel- to a cross-kin status even if they, basically, never lose their affiliation to their natal kin group. In this sense they hold a similar ambiguous position as do mothers, who originate from the cross-kin section but, in procreation, generate parallel kin, siblings. In terms of cultural evaluation, sisters, in fact, are very much likened to mothers. They have much more in common with mothers than with the category of wives. Apart from the important fact that both mothers and sisters are unapproachable in sexual terms, this is due to the important role girls are vested with at an early age in taking care of, feeding, and providing emotional warmth and comfort to their siblings. The habitus between brothers and sisters is very much more of the "motherly" type than of the "womanly" kind. Sisters are identified with the themes of sustenance and nurturance, and not with procreation. Upon death, sisters return to this role of providing care for their brothers, whilst wives remain remarkably inactive and, outwardly at least, unaffected by the event. When a woman dies she "returns" to those men, her brothers, who, in turn, gave her protection and were responsible for her before marriage, whilst the husband plays a secondary role.

All the duties performed by the cross relatives – the holding and washing of the body, the manufacture of the coffin, and the digging of the grave – have to be compensated with an appropriate number of pigs and yam on the occasion of the final funeral feast held a few weeks or months later. The date of the funeral feast is dependent on seasonal factors and on how well the deceased person's kin group is stocked with supplies of pigs and yam. This kind of compensation payment is termed *perete atominge*; in Tok Pisin the act is referred to as presentim ol bilong wok (giving them a present for their work). There is nothing unusual about this form of compensation; what is noteworthy, on the other hand, is that the recipients of the *perete atominge* are expected to reciprocate the prestation at some later, unspecified, date. Thus, we find that the death payments do not conclude a relationship between the deceased's kin group and the various cross-kin segments; instead reciprocation engenders the sustainment of the valued cross-kin relationship beyond the death of the person who actually incorporated the linkage. The reciprocal exchange spans the gap which the death of their kinsman created. The return payment signifies the cross kin's resolution to maintain the meaningful relationship. Whether this is appreciated or not and whether in the course of time an active link is upheld or not depends on the manner in which the descendants handle the relationship but, at least, the foundation for the continuation of the link has been laid down.

In the context of formal transactions in general and funeral prestations in particular, one encounters a complementary, though important, process which is not guided by design but emerges as a significant by-product of the exchange event. This refers to the clarification of valid existing relationships, the exposition of the effective range of meaningful relationships in contrast to the purely nominal ones. Funerals compel kinsmen and kinswomen to declare themselves, to make explicit whether their relationship to the deceased's kin group is merely nominal or whether they are to be ranked as meaningful kin. In the enactment of prestations the meaningful webs of relatedness briefly materialize and take on virtual form. They become visible and observable to the social universe. In initiating action, an agent is able to recognize who in actual fact can be rated as a close and trusted kinsman and who only masquerades as a *nauwie* or a *meinheil* respectively. The classificatory kin system makes no clear distinction between close and distant kin. In theory, at least, upon death all a person's agnates would be required to contribute to the death payments and cater for the funeral gathering whilst they keep the death watch. On the cross-kin side, all the deceased relatives nominally would have the right to conduct, or participate in, the vital steps of the funeral procedures. In practice, naturally, this is not the case, and the range of kin that actually actively participates in the funeral procedures is limited on both sides. But within this limited range, the distribution of rights, privileges, duties, and obligations is not clearly specified and it is up to the participants to clarify, negotiate and order this issue between themselves. The more prominent the deceased person was, the larger becomes the range of actors involved.

On the cross-kin side, the question of who holds the privilege of taking the lead in the funeral procedures is a matter contested and negotiated between the person's different segments of cross relatives, which are liable to include the deceased's mother's brothers and their sons, his sisters' sons, his group of affines and, in the case of old men, his daughters' sons. On occasion some of these groups are identical but very often they are recruited from different segments and wards. Basically, it is the mother's brother's group who holds the priority claim, on the basis of the immediate matrilateral link but if, in the past, the members of this segment, or at least some of its principal members, have not lived up to the standards expected of them and have neglected their duties towards the person in question, thus devaluating an important relationship, it is possible, if not even probable, that others, for instance the sisters' sons, will raise objections and challenge their ascendancy on the strength of the claim that they had been much closer to the deceased and had done more justice to the man in his position as an important cross relative, and that, therefore, they were justified in taking the lead. While, at times, cross kin compete with each other in this manner for the privilege of taking precedence in funerals, the deceased agnates go through a similar, but usually more contentious, process, and with inverse premises. They do not contend so much for privileges, as fight over the equal distribution of carrying the burden of the costs of the funeral.

In general, the period immediately after death is one of heightened tension. Not only do the people have to come to terms with the loss of a kinsman or kinswoman but, owing to the fact that death is hardly ever put down to natural causes, the sense of a lurking threat

and danger often pervades the atmosphere. Although no cause has yet been established, the issue of sorcery and the fear that the sorcerers are still around are ever present. The people are apprehensive and touchy and it does not take much to trigger off dissension and quarrels. This is especially true of the deceased person's agnates who will be called to account for the death of their brother or father respectively. Moreover, it is the agnates who have to come to terms with each other on how they are going to organize and deploy their resources in the funeral undertaking. Against the background of the potentially antagonistic disposition between agnates, this is not an easy task. Circumstances and the pressure of outside expectations force them into a mould of reluctant cooperation. A man's full brothers, their sons and his own sons form the core of this potentially contentious group. Attached to it are a variety of kinsfolk to whom the deceased did not necessarily have a close genealogical linkage but to whom he had close relations on the basis of lived experience, such as co-residents, men from his ritual moiety, and people he was tied to by friendship. Although these supporters play only a secondary role in the actual funeral procedures, they are of importance on the strength of the fact that they are able to ease tensions and mediate should quarrels arise between the principal actors. In this context, one must take into account that the demise of a senior kinsman leaves behind a power vacuum which entails the repositioning and the reordering of relationships within the group of agnates. This refers notably to the case when the deceased leaves behind adult sons, and especially if these are brothers with different mothers. Funerals, being such public events in the context of which performance plays a primary role, provide the convenient settings for siblings to assert themselves and demonstrate their autonomy, or even more, to exert dominance over each other. This is especially true of elder siblings who feel entitled to take precedence over their younger siblings and to dictate procedures on the strength of their seniority, which, in turn, is vehemently challenged by the latter. Consequently, interaction is tense, with agnates keeping a keen check on each other and seeing to it that everybody equally contributes foodstuffs to the various prestations. Excessive largesse on the part of one actor, on the other hand, is just as detrimental to the situation as is meanness, since it suggests a person is attempting to assert himself and compels the others to try to draw equal with him. Attaining a balance in this potentially disruptive situation is imperative but it is a delicate matter. It is often only achieved through the mediation of the supporting group or by influential cross relatives.

In the case of the death of a woman, relations and procedures in the context of the funeral are markedly less strained. Firstly, this is due to the basically more positive rapport which men have towards their sisters and mothers than towards male agnates. Men cooperate more freely because each actor is more likely to have stood in a close relationship with his mother or sister and feels compelled to express this valued bond through contributing liberally to the funeral prestations. Secondly, the death of a woman leaves no position vacant which rivalling agnates feel a need to contend for.

I never had the opportunity to witness an elaborate final funeral feast, or las kaikai as it is commonly termed today in Tok Pisin. They are no longer properly performed. According to the descriptions I received, the main part of the feast involved the prestation

of the various foodstuff valuables to the different cross-kin sections, and also the exchanges between the ritual *ambuli* and *pengame* sections. If an *ambuli* man had died, the members of this section would recompense the *pengame* men for making an appearance on the occasion of death, and vice versa respectively. Some time afterwards the *pengame* would then reciprocate. Depending on the prominence of the deceased person, these prestations were preceded by nightly performances of the *ambuli* and *pengame* singsing by the two sections and were liable to actually develop into an exchange feast of the competitive type, in form similar to the *serengel pinandil* feast. When this was the case, the exchanges which ensued were between actual *pinandil* sets, i.e. the opposing kawas within the *pengame* and *ambuli* sections respectively engaged in ritual exchange, and no longer between the two sections as such. It signified and established the continuation of the ritual exchange system beyond the death of one of its members and marked the event on the occasion of which the deceased's ritual successor or successors took over full and sole responsibility within the ceremonial system. The last occasion of such an elaborate funeral feast was in 1982 in the ward of Warengeme following the death of a man called Melehei of the *enaha* section of the Enniki line (A2). Under the leadership of their bigmen, the two sections initiated an exchange feast during which a total of 14 pigs was exchanged, seven amongst the *pinandil* of the *pengame* section, seven between the men of the *ambuli* section. The men later told me that it had been agreed upon that this was to have been the final of all ritual exchanges in the village. From then on, it had been decided, all energy and efforts should go into growing cash crops.

At this point, allow me to briefly summarize. Events of formal exchange, which are effected on the occasion of various life-cycle stages, form the central nodes of the social process. The structuration of the social system is geared to, and centred upon, the organization and enactment of formal transactions which constitute equality-producing events. The effective social groupings – networks of relatedness centred on individual actors – crystallize and take on form in these instances. The event of transactions and the social configurations which ensue create the precedents and social foci, upon, and through, which future action is rationalized and enacted. They form the central reference points which agents fall back on when conceptualizing and planning their forthcoming strategies and which they revert to when justifying and making their course of action socially accountable. They also position an actor in the effective social order and define in what kind of effective relationship he stands with the other members of his social environment. The transactions conducted on the occasion of funerals create vital linkages between subsequent generations and guarantee the potential continuity of existing bonds of relatedness, primarily with various sections of the cross-kin segment. Ongoing exchange events foster social cohesion beyond the life span of the individual actors, which produce and reproduce the social order.

The cultural design sees the men as the central agents who organize, initiate, and perform these pivotal acts of exchange. Men are the transactors, and the culturally dominant male ideology sees men as sustaining and perpetuating the social order through their inter- and transactions, whilst women are credited with playing important roles which, however, are only secondary to the achievements of men. In terms of male ideology, women are regarded as subordinate to men. It is men who act in culturally conform ways, the women stand behind their men. They themselves have no means of public or political achievement. They achieve status and a name for themselves, and attain high regard but always through, and in relation to, a male counterpart. They are active in the ceremonial system, but their role is complementary to that of their men.

However, men have to concede that women are more than just complementary; they are in fact indispensable. A man without a woman, either sisters or a wife, is a nonentity. He has no means of competing with his fellow men and thus remaining equal, and of achieving rank and status, except in the negative sense as a sorcerer. He has nobody to help him in gardening, no woman to rear his pigs, and nobody to provide him with support either through descendants or affinal ties. But women are far from powerless. Although male-female antagonism is in no way as marked as in other parts of Papua New Guinea (cf. M. Strathern 1987), female sexuality is still regarded as inimical or at least potentially dangerous to maleness, but again, sexuality is indispensable. Women are associated closely with growth, increase and proliferation, natural cycles, the moon with its motion of waxing and waning, and with the notion of sustenance. On a more immediate level, although men generally boast of having potent means of capturing and controlling women through various forms of love magic, they privately admit that women, too, have the same means.

Although outwardly, and in terms of accountability, the social world is structured by male activity, transactions and male social forms, the female essence is ever present and exerts a strong influence on its shape and appearance. The limits of the social world are actually demarcated by women, in time and space. Men and women, human beings, enter the world through women, their mothers, at birth, and, upon death, they depart from the human world through the hands of their sisters and male cross kin, conceptually again the mother's people, who hold and wash the body, and finally bury it. Relations to the realms outside the wider social universe are created and sustained through marriages, either through out-going sisters or through in-coming wives. Here again it is the women who define the limits of the social universe in which men claim for themselves that they are the central actors.

One of the main criteria of defining masculinity and distinguishing gender is the act of formal exchanging. Men transact with men for women, exchanging sisters for wives, who will bring forth sons and daughters who will then be exchanged again as sisters in the following generation. Men also transact objects of value (as gifts) with men for their place

in society within the ceremonial system. Such transactions and exchanges are regarded as male activities. Women themselves, as a rule, do not exchange, they either help their husbands, brothers, or fathers in preparing and performing formal exchanges, or they are engaged in, and manipulate, their own transactions in marriage affairs, where the women play a dominant role but, in retrospect, the transactions are moulded into a male form again and are masked as sister exchanges between men. In the men's view, women are too unreliable to operate as central actors in the systems of exchange. They are like flying foxes, the men say, they go from one bread fruittree to the next. The allegory makes it look as if women were of such weak character that they were immediately prepared to substitute one husband for the next, providing that the new man promised a better position or additional gains. Reality conveys a somewhat different picture. Even after marriage women retain much of their autonomy and if the husband does not treat her well, she is liable to desert him and look for a partner that suits her better. In marital affairs the women are often just as active as their male counterparts.

The collective ideology on women conflicts seriously with the individualized perception of certain female kin categories. Although women as a cultural category are granted only secondary and subordinate status, the categories of mother and sister, and, by extension, the father's sister, enjoy an exceptionally high valuation and status. At times, men find it hard to bring these opposing views into line with each other and to differentiate between their roles as males and their positions as brothers of women and sons of mothers. It constitutes one of the many contradictions which Wam men face. A similar kind of cultural contradiction exists in the realm of male siblingship, where ideology depicts brothers as forming a unified entity of primary allegiance, while reality reveals a contrasting picture of brothers locked in rivalry and antagonism. The resolution of these kinds of contradiction constitutes one of the most dynamic moments in the Wam social process.

There is no comprehensive designation of our English term sibling. At times the term *walkehinge* is used but this is more a metaphorical term which refers to the relationship between a father and all of his children. The term is taken from the domain of gardening and yam growing. It refers to the creepers of the separate yam shoots (children) which are attached to a central pole (father). Apart from this allegorical term, there exist two sets of terms by which siblings (irrespective of gender) are differentiated on the basis of ranking and age. *Peterime* or *umbwahinerime* designate elder siblings, while *somantime* or *pitaikirime* denote younger siblings. On the gender variable, the distinction is made between *nauwie* (brothers) and *numandi* (sisters) but the latter term is used only very infrequently. I have described the systems of kin classification and terminology in detail elsewhere (cf. chapter 3). As one will recall, parallel kin, or agnates, can be taken to include those people who stand in the same or parallel relationship to the same things, i.e. other people, spirits, land, bush, etc. They basically share the same stance in relationship to their environment. The existence of a classificatory kin system by no means repudiates the notion of parenthood. Besides the recognition of being bonded by being subject to the common code of "sharing" with each other, full siblings also share common substance with

each other which they received in procreation through their father. The latter notion of common substance, however, is backgrounded against the clearly more significant issue of having shared sustenance from a common source, i.e. the mother. Full brothers and sisters share both substance and nurturance with each other, the critical differentiating factor is, of course, the issue of gender. Being women, sisters represent different cultural beings altogether, and the variable of gender engenders a diametrically different relationship pattern between cross-sex and parallel-sex siblings. I shall be coming to the brother-sister relationship shortly but I shall first take a look at the male sibling relationship.

In terms of one of the perspectives, the ideological viewpoint, full brothers share a common stance to their social surroundings and identity with each other. They are men, moreover, men of the same generation, they are made of the same substance, and they have been nurtured and have grown up and become strong on the same source of sustenance and from the food grown on the same land; furthermore, they have sisters in common by whom they were held, nursed and fondled when young, and who showed them affection and provided them with comfort in childhood; brothers also share an identical rapport to kinsfolk immediately linked to the conjugal family, such as mother's brothers, father's sisters, and the children of these, but also to their father's and mother's parallel kin, i.e. father's brothers and mother's sisters, and their offspring. On this level one, is justified in speaking of the unity of the sibling group. In ideational terms, brothers share a common identity and a strong feeling of belonging together and of forming "One"; the losses and gains of one brother are the losings and returns of the other; the threat to a brother is a challenge to oneself, and the death of a sister is a loss to all.

However, in the decidedly more contentious realm of social practice the dividing line between the idea of sharing the same things and the notion of competing for the same prizes is very thin and highly fragile. Men find themselves torn between the two alternatives of viewing their brothers as their closest intimates and, at the same time, their most ardent rivals for the same valued resources. Commitment to a common cause is counterbalanced by feelings of jealousy and the pervasive threat of being outdone and deprived by one's siblings. Brothers draw on the same stock of allocative resources, they contend for the same category of women in marriage, what is more, they rely on the same stock of sisters in order to initiate a marriage transaction. The flexibility of the systems of marriage and exchange eases the strain somewhat, and provides for alternative channels, but the basic contentious disposition between brothers remains. More than sharing the resources at their disposal and joining to form a unified group, siblings compete for them against each other. Against the background of the overall habitus of male competitiveness and the ongoing struggle for equality between men, this is in itself a critical and potentially disruptive configuration. A factor that aggravates the situation even more is that the sibling relationship contains one of the very basic contradictions in the social order, in the sense that siblingship contains the intrinsic element of hierarchy, owing to the design that a differentiation is made between elder (*hurineme*) and younger (*somal*) brothers. Thus it becomes apparent that one of the most central relationship categories in the social system contains a refutation of one of the basic themes in social life, namely the claim to equality.

Brothers are not intrinsically equal; there is a clear ranking order. Elder brothers, nominally, hold a position of authority and control over their younger siblings. Disregarding generational ranking, the *nauwie* relationship is the only relationship which contains a built-in hierarchy through the recognition of a distinction between elder and younger brother. Birth order is an important issue in Wam social order. The eldest brother is attributed a higher status than his succeeding brothers. Within a set of brothers the eldest is called either *erke* or *milmbe*. Both terms designate the "head"; *erke* is the term in general for head, *milmbe* describes the top end of a yam tuber. The youngest brother in a set of siblings is designated as *somal* or *pitai* (the young or small one), and intermediate siblings are grouped together as *ereme*. Within a set of siblings one finds a consecutive breakdown into dyads of *hurineme* and *somal*, each elder brother having precedence over his younger sibling. Thus, even an *ereme* brother is a *hurineme* in relation to his younger siblings. Back in ideological terms, one encounters the picture of the head brother leading a group of siblings with his younger brothers following and backing him up, but in practice and reality this vision rarely materializes.

Elder brothers have precedence and have authority over their younger siblings. In the absence of a father, it is the eldest brother who takes command over the affairs of the family and who is responsible for the control over the joint estate. In the event of the father not having distributed the resources he held, it is the eldest brother's task to distribute the family's holdings justly and evenly between his brothers and himself, as far as this is not already clearly regulated through the naming system. In a similar fashion as sisters are likened to mothers, elder brothers are conceptually equalled to fathers. Nominally, younger brothers are subordinate to the eldest in an analogous fashion as sons are subject to their father's authority. The decisive difference lies in the fact that brothers belong to the same generation, and it is here that the basic code of equality runs up against the inherent hierarchy. Ranking threatens to lead over into domination. In view of the basic themes of individual autonomy and equality, this claim to precedence by elder siblings does not go uncontested.

Indifference and latent antagonism are characteristic features of the sibling relationship. Brothers also tend to distrust one another. A man seeks his closest associates and trusted supporters amongst his cross kin, or finds them in his ritual partners. When I asked one man what he had to expect from his brother, he replied after a brief pause "you can kill a brother with sanguma". This is no legitimization of sorcery. Sanguma is looked upon with disdain and fear no matter whom it is performed on, and by. But it indicates the overall attitude between siblings, and implies the expectation that if an act of sanguma is committed, the culprits are more likely to be found amongst one's brothers and other agnates than amongst one's cross kin.

Nevertheless, not all sibling relationships are negatively charged, as the example of Mahaite Ningaha and Numbia goes to show, and there are many other like relationships. The effective rapport between two brothers is very much an outcome of the way the two men shape and handle their relationship, and dependent on whether they have any potential objects of competition in common, in the form of land, sago patches, or rights to names.

Furthermore, one finds that brothers who have a linkage through a common mother usually are on better terms with each other than siblings who are only united through the recognition of joint fatherhood. The bond created through the idea of having been nurtured by the same mother is decidedly stronger than the notion of only possessing substance in common. The propensity for conflict is greatest between classificatory siblings of the same lineage or between agnates of co-lineages who are compelled to acknowledge faint bonds of common substance – their fathers or fathers' fathers possibly were full brothers – but who were nurtured by different mothers, and where vague residual claims to material or immaterial property can be asserted. This represents a highly disruptive configuration which becomes notably aggravated under conditions of land shortage.

However strained and contentious the relations between brothers are – well over seventy percent of all events of conflict I registered involved altercations between people who stood in an agnatic relationship with each other; the large majority of these involved people who ranked as brothers – the notion of siblingship remains a social ideal. In this context it is highly significant that when two men who nominally rank as cross kin (*meinheil*) expand and deepen their relationship and become linked to each other through a strong bond of friendship, they are likely to convert their relationship to one of siblingship. They will address and refer to each other as *nauwie*, notably without making a distinction between elder and younger. This kind of conversion is not subject to any special rules or occasions, it simply emerges out of long-lasting and ongoing practice. On the other hand, there is no compulsion to undergo this kind of transition and there are many cases where two *meinheil* are on the closest and best of terms with each other without having undergone this switch. Mahaite Ningaha and his *meinheil* Mahi are such a case. The mechanism underlying this conversion is what I have called code supplementation (cf. p. 30). It involves the gradual adoption and internalization of the code of the respective kin category of which the two actors are not part. For cross kin, whose basic disposition is dictated by the code of "exchange" and whose habitus is governed by mutual respect and restraint, it means adopting a habitus of "sharing" which engenders a strong notion of togetherness and identity and, at the same time, relaxes the rather strict etiquette characteristic of *meinheil* relationships, however, without it decreasing the degree of respect they previously showed for each other. *Meinheil*-turned-*nauwie*, so to speak, share the best of two worlds. Their relationship is one of absolute trust, equality, and unity; they actually attain what the ideology of siblingship connotes. The same kind of conversion one encounters at times in male-female relationships as well, i.e. men and women who nominally are classified as husbands and wives change their relationship status to one of brother and sister. This is often the case when a man and a woman have grown up together in the same household or have shared residence in the same hamlet for many years, and have grown very close to each other in the course of time. They express this close bond through a switch in terminology and an adaptation of their habitus in their relations to each other.

At times, for instance on the occasion of funerals or other instances which demand the making of prestations, brothers are moulded into a form of reluctant cooperation. When brothers marry, they rely, amongst others, on the support of their brothers to amass the

necessary amount of valuables and foodstuffs in order to make the required *alnde erke* prestations. Very often this is done only grudgingly and always under the clear condition that the contributions will be reciprocated for the same, or some other but equivalent, purpose at a later date. Sometimes brothers garden together but usually this is merely for the sake of convenience when they possess contiguous tracts of land and the task of clearing the bush is made easier through cooperating with each other. There is, however, one specific configuration which brings brothers together and moulds them into a unified front. This is when one of their sisters has been seriously wronged or threatened. It is then that her brothers rally and protect her in unison and unconditionally.

Purely in terms of the parallel/cross distinction, mothers and wives have more in common than do mothers and sisters. They are both members of the opposite kin category but in marriage and through birth they produce offspring which are of the same substance (that of their husbands). In terms of cultural understanding and sentiment, however, it is the sisters who are likened to mothers. Unlike wives, mothers and sisters demarcate the realm of existence. In the domain of ritual, wives play a subordinate role, not in terms of their economic contribution but on the level of meaning in the secret men's cult. The tamberan comes to take away the brothers from their sisters and the sons from their mothers, not the husbands from their wives. When the initiates re-enter the village universe after seclusion they are ritually welcomed and praised by their sisters and mothers and not necessarily by their wives. In addition, by virtue of their status it is in the capacity of mothers and sisters to unify brothers; mothers through the idiom of shared nurturance, whilst brothers rally to support their sister if she is threatened or maltreated. Wives, on the other hand, are very much more likely to cause dissension and jealousy between brothers, and men are likely to keep a watchful eye on their wives, lest they run off or have an affair with their brothers. When brothers do quarrel with each other, the wife is often made the scapegoat and given the blame for the dissension even if she was not directly involved. Sustaining the appearance of male solidarity is often more important than risking marital strife.

As Burridge noted for Tangu (1959:130), the brother-sister relationship is actually a pivot of social life and culture. The continuity of the social order and replacement of one generation by the next is dependent on sisters. Since men cannot marry their own sisters, they have to be exchanged for wives. The brother-sister relationship is one of deep respect, affection, and support. To the question why sisters were of such great importance to them, men usually gave the stereotype answer "who cares for you if your mother is not around, or your parents have died, it is your sister". In the early years of life, and owing to the fact that girls take over responsibility at a much earlier age than do boys, the onus is nearly entirely on the sister to provide for her brother in terms of care and emotional support. Later in life, in adolescence and adulthood prior to marriage, brothers recompense this by providing their sisters with protection and support in times of trouble or need. He protects her person and interests against intrusion by other men, whilst, at the same time, he himself is obliged to respect her domain of autonomy and her property. This kind of brotherly custody can easily develop into a form of benevolent domination but sisters are not utterly

exposed to the whims and fancies of their brothers, for they have a potent leverage in their hands: the forthcoming organization and negotiation of marriage.

Disregarding the fact that in the majority of cases the relations between brothers and sisters are sincerely affectionate and warm-hearted, brothers are very careful to retain this positive rapport and keep their sisters in a "good mood" with the help of a continual flow of small presents and other means of expressing their sympathy. In larger sibling groups, one often finds that single consecutive brother-sister sets are formed, where each sister is allocated to a specific brother and where she is denoted as "his exchange". When sisters are neglected, their brothers run the risk of their sister flouting their marriage plans, choosing a marriage partner of their own, and eloping. This happened in a recent case to a young man called Totaha who was on the verge of marriage. One morning he heard that his sister Uilie had eloped and was staying in her future husband's hamlet. Later in the day he went to visit her in her new hamlet where he reproached her severely for her conduct, maintaining that she had no right to run away in this fashion as she was marked as his "exchange sister". Upon this, Uilie answered bitterly that he had never cared for her before and that he had no one to blame but himself. She then added sarcastically, and to the utter shame of Totaha, that she was willing to squat down and that he could then take her excrement and use it as an exchange for a wife. Such conduct, however, is rare, and certainly between full cross-sex siblings one goes to great lengths to avoid quarrels and dissension. There is no joking between brothers and sisters as this would be considered extremely shaming, but otherwise there is no need to avoid each other in any way. They can, for instance, take things liberally from each other such as betelnut or tobacco.

The brother-sister relationship takes a brisk turning when the sister gets married. From then on she is no longer directly under her brother's care and diction, and all the responsibility falls to the domain of the husband. The husband/wife relationship is prone to conflict, especially in the early years of marriage, but in marital conflicts the brother is required to support his *meinheil*, the sister's husband, and not his sister. This poses a further contradiction Wam men have to resolve.

The term *meinheil* encloses both the affinal and male cross-cousin relationship. *Meinheil* are male matrilateral relatives of the same generation, the sons of mother's brothers. Apart from the idealized notion of siblingship, the *meinheil* relationship, in many ways, is regarded as the epitome of male relationships. Between *meinheil* there is absolute equality of status. No differentiation is made between elder and younger, they are simply *meinheil* to each other. In conceptual terms, their relationship is reckoned through sisters. They are the product of a sister exchange in the previous generation, one's father is the other's mother's brother and the former's mother is the latter's father's sister. If they become *meinheil* through marriage the previous sister link is validated and reinforced. They have equally given to, and taken from, each other and thus the balance is offset.

In contrast to the sibling relationship, theirs is one of respect and reserve. *Meinheil* cannot make demands on one another, nor should they ask for things from each other, at least not openly. Under no circumstances can they order one another to do something. Any attempt to assert authority over a *meinheil* would be regarded as extremely shaming to both

parties involved. At the same time the *meinheil* relationship is a very playful one. It is the classical joking relationship. The use of witty metaphors and allusions sometimes gives men the opportunity to tell their *meinheil* things which the habitus of their relationship otherwise forbids. The overriding theme in joking is the male-female relationship, more specifically the husband-wife relationship: *meinheil* make jokes about one another on the basis of one being the other's wife. These are not necessarily sexual jokes, they refer more to the role of wives in work (weeding in the garden, collecting firewood, fetching water, cooking). The relationship is reciprocal but it is restricted in the sense that not all *meinheil* are at the same time joking partners. Only those who have developed such a humorous relationship during childhood and adolescence will retain their playful attitude to one another in adulthood. For women it is their *kwalinei* who take over this role. Outside this limited range of joking partners – a man on average has six to a dozen such joking *meinheil* relations – the relationship is almost a hallowed one.

In all situations, physical confrontations included, and no matter how uneven the odds are, *meinheil* are supposed to help each other and stand together, even if this means that a man has to go against his own siblings. Any other kind behaviour would result in extreme shame on his part and he would be reminded of it ever after with such questions as "where were you when your *meinheil* got into trouble?" Men who stood by their *meinheil* in such a situation are termed *malehe numinehe*, a spirit that turned around, i.e. a turncoat or traitor by their agnates, but such a reproach is much easier to digest than the accusation of having let your *meinheil* down. To quarrel and fight with brothers is in accordance with cultural expectations and nobody is greatly concerned when this occurs, but deserting a *meinheil* in need is a serious breach of the code of conduct. In this manner, *meinheil* often become involved and come between quarrelling brothers, taking sides for the sibling they feel closest to. The other aspect of this configuration is that *meinheil* also are the most likely persons to intervene and mediate in minor conflicts between brothers. In larger and more serious conflicts the mediating role is more likely to be taken over by a group of *agel anheil* who are in a stronger position to resolve the conflict, due to the influence as senior cross kin and on the strength of generational authority.

Cross kin often take over the role of mediators in conflicts between agnates but, at the same time, it is significant to note that very often *meinheil* revert to the services of third parties for mediating in their daily pattern of interaction. As the case study of Mahaite Ningaha and his *meinheil* Mahi shows (cf. chapter 5), this refers especially to the important sector of visiting each other in one's hamlet. Visits to a *meinheil* without a pretext are problematic, since visits contain the implication of a wish or demand of some sort. Between brothers this is much less of a problem since no reciprocal expectations are involved. The wish to see one's sister would be a conceivable reason for a visit to a *meinheil*, but also a questionable one because it would imply a suspicion that she was not being treated well. This would not only be considered as an insult to one's *meinheil* it would also be severely transgressing the boundaries of responsibility: brothers are no longer responsible for their married sisters. Food acts here as one of the means of mediation. Men bring small presents of food, tobacco, or betelnut to their *meinheil* and

sisters. An even more suitable reason for visiting are young children and grandchildren. These often reside in the care of an elder sister, or even more frequently with their grandparents during the day. In the evening they are taken back to their family's hamlet, which provides an ideal and equally accepted pretext for making a visit.

The code of interaction between *meinheil* is one of giving. Affines help each other liberally in their economic ventures and daily chores of work. Often *meinheil* will reserve a so-called *amuneme*, a compartment in the garden, for each other. Nominally such a block is given to the sister or one of her children, but the meaning of the prestation is intended for the *meinheil*. On purely economical terms such a reciprocal exchange makes little sense – I give up a piece of my garden and receive an equal piece in another man's garden – but in social terms it is, of course, highly significant. Through the act they are validating their valuable bond; they are expressing it by providing each other with the means of sustenance. The two men and their families will then work together in clearing the land, preparing the garden and planting food, and after the harvest they will exchange small token prestations of food-crops. When siblings cooperate in gardening it is on a much more pragmatic basis. There is no formal invitation by one party to the other and at the end of the season there is no exchange of food crops. Nevertheless, at times situations do arise when *meinheil* make claims on each other, or one feels compelled to demand something from the other. Even on such occasions, however, wishes are not expressed explicitly but are encoded, either in allusions during conversation, or through acts of giving: one gives in order to receive later. The management of this becomes an art in itself, as the actors become involved in an interplay of allusions, of acts of giving and of joking about allusions to acts of giving.

In the parental generation, a similar distinction in habitus exists between cross and parallel kin as it does in intra-generational terms. Overall, naturally, the older generation holds ascendancy over the younger cohort on the basis of seniority and, nominally, juniors are expected to show respect and obedience towards all their seniors. The father (*agel*) has absolute authority over his children, at least in younger years, and, basically, he can wield this authority as he likes. However, he will be well advised to apply restraint in disciplining his children, in view of the fact that in the course of the years the tables will be turned and that, in old age, he is likely to become dependent on this sons and daughters. While cross-sex relations are usually more relaxed, and in the case of mothers and sons even very close, and mothers and daughters are linked by a bond of female solidarity, the father-son relationship is tinged with the pervasive ethos of male competitiveness and comes under considerable strain when the sons approach adulthood. Young men strive for autonomy and self-assertion, and, apart from holding their own against their siblings, this primarily involves detaching themselves from their fathers. Gradually sons will come to replace their fathers, and this presentiment finds its expression in a row of taboos which hinder sons' access to, and use of, their father's personal belongings. Breaking the taboos results in the father's premature aging. In relation to his grandchildren these restrictions are even more rigorous.

Fathers are very much concerned about how their sons fare, even if, frontstage, they often do not show this, while sons normally react to their fathers with indifference or aloofness. According to the cultural design, young men acquire their skills in gardening and hunting and their knowledge of important issues of life from their fathers, but practice shows that very often this is not the case. More often, men obtain these assets from other senior kinsmen – senior cross kin, distinctly elder siblings, classificatory fathers – to whom they attach themselves and who become mentors to them. This kind of substitution of fictive fathers for the real fathers is extremely frequent and actually just about approximates to a pervasive cultural pattern. Fathers actually have very few means of coercing their sons to conform to their wishes and the most effective method of retaining at least some control is providing well for their sons. Even if they do, the fate of fathers seems to be that of being held in rather low esteem by their sons, and in old age fathers are regarded as an actual burden. They usually prefer to be taken care of later on by their daughters. It is understandable, therefore, that fathers do not like to see their daughters marrying far away. It means the latter would not be around to care for them in old age.

In the relation between a man and his mother's brother (*agel anheil* or *agel hauneil*) the strain which is so characteristic of the father-son relationship is markedly absent. This does not mean that the rapport between junior and senior cross kin is informal or casual in any way. *Agel anheil* are held in great awe and command respect and a high degree of influence over their sister's sons. But in its basic disposition the relationship is positively charged. The foundation of this positive relationship lies in the brother-sister relationship in the senior generation, i.e. between a person's mother and her brother. The same holds for the relationship between a father's sister and his children. The so-called *ni ananei* are held in the highest esteem and they rank almost higher than do mothers.

There exists a rich metaphorical terminology to designate the all important MB-ZS relationship. Apart from the previously mentioned *ombosahaha/permute* allegory, *agel anheil* – but only the actual mother's brothers – are frequently referred to as *wolmbe enaha*. *Enaha*, amongst other connotations, is the term for the female womb, *wolmbe* means deep water: so deep water womb. The term plays on the idea that the mother's brother is in actual fact a kind of male mother and that in a certain sense – he being of the same substance as the mother – he "gave birth" to his sister's child. The term is only ever used in reference by both the brother and the sister's son, and under no circumstances in the presence of the mother herself, since any reference to either a sister's or a mother's sexuality is extremely shaming. Another common, and less restricted, set of terms is *wahute* (kwila, the ironwood tree) and *eile* (fish) for the mother's brother and sister's son respectively. It is a reference to the habit of fish hiding amongst the roots of the kwila tree from their predators and fittingly reflects the role a mother's brother takes over in relation to his sister's children. What he no longer can give his sister herself because he has had to forfeit all claims to her husband, his *meinheil*, he now grants her children, that is support, advice and, first and foremost, protection. This kind of protective shield a man places over his sister's children is best reflected in the notion that a person is absolutely safe from sorcery in the presence of an *agel anheil*. This not only infers that he is safe from the use of

sorcery by his mother's brother himself but protected from an *arukwineme* or sanguma attack in general. In return, sister's children throughout their life are expected to show their *agel anheil* the greatest respect, restrain themselves in every way in his presence, and, above all, support him whenever, and wherever, he asks them to. Transgressions against these norms are subject to sanctions by the mother's brother, who is liable to place a curse on his sister's child, producing either illness, bad luck in hunting or crop failure. In very serious cases, *agel anheil* are justified in demanding compensation in the form of a pig. As noted in one of the previous passages, mother's brothers at times develop a special relationship to their sister's daughters in the sense that they lay claim on them for marriage to their own sons. They sustain this relationship throughout childhood and adolescence through a continual flow of small presents of food. One of my informants maintained that, in the past, if a woman flouted these claims, the mother's brother was justified in killing her by sorcery. Other men, however, denied this, stating that it was conceivable that this had happened on occasion in the past, but not that it was a rule of kastom. Men were likely to use sorcery, they said, whenever they felt that they had been wronged.

I now return to the intra-generational level. A serious potential source of conflict lies in the contradictory relationship pattern between brothers and sisters, between *meinheil*, and between husband and wife. Whilst brothers and sisters stand in a close relationship, as do the two *meinheil*, the husband-wife relationship is often subject to heavy strains. Prior to marriage, brothers come to the help of their sisters when they get into trouble, but after marrying this is no longer possible since a brother forfeits all claims to his sister to his *meinheil*. If the latter should happen to treat her badly, the brother faces a serious dilemma, since he cannot come to the aid of his sister without affronting his affine and jeopardizing their relationship. It would signify an incursion into his *meinheil's* domain of autonomy and imply an attempt at exerting domination. Confronted with this situation a man has the alternative of turning away and not looking, or else he must side with his *meinheil* in an act of male and cross-kin solidarity, even if it runs against his own sentiments.

In the early years of marriage there is often a lot of strain in the marriage. Husbands often only gradually settle down to their new role and responsibilities. The ties that unite the couple are shallow until the stock of children has grown and the couple has gained complete independence of parental support and guidance, and forms an autonomous household. Then husbands and wives can grow very close to each other and, in due course terms can even become cordial. Frequently, older men say that one's wife is the closest ally one has. In younger years, however, wife beating is quite common, and men are under a great deal of pressure from their peers to live up to the male standards of dominance over women and to prove their strength as adult men. An additional strain is put on the marriage if a husband decides to take a second wife. Normally the first wife has to give her consent to such a decision but, in effect, there is little she can do but accept her husband's decision, for there are few alternatives open to her. She can return to her brothers and natal family for a while but not indefinitely, as not even her brothers are likely to be prepared to support an additional woman and children for any length of time. Moreover, a brother would be

seriously risking a confrontation with his *meinheil,* who is probably expecting the brother to use his influence over his sister and make her return to her husband.

The code never to fight with a *meinheil* is a hallowed norm. Nevertheless, dissension between *meinheil* does occur from time to time. Those involved try to contain it as best as they can; mutual avoidance is the best method of preventing an escalation. Should it come to blows after all, it is perceived as being a very much more serious affair than if agnates or brothers enter into open conflict. The cause of trouble is almost invariably the serious maltreatment of a woman by her husband. Such an incident can rally siblings and make them stand together and operate as a unit. Amongst themselves there may exist a general spirit of indifference which prevents them from coming together for other purposes, but they unite when their sister is threatened and will stand up and form a front against their *meinheil.* Admittedly, until this happens it takes a great deal of provocation, and even then the pattern of conflict development is unpredictable. The form the alliances take on is dictated by the prevailing circumstances and will be influenced by past experiences and the overall rapport between the potential allies and adversaries. There is no way of predicting, for instance, how the *meinheil*'s own siblings will react in such a situation, nor is there any guarantee that the sister's brothers will really join together and build an alliance. It is conceivable that the brothers are deeply split in their allegiance and that one of them will switch sides to support his *meinheil.* In such a case the term *malehe numinehe* (sibling traitor) will be applied and the sibling group will first turn against their "unfaithful" brother and deal with him. The ensuing conflict will then take on the surface appearance of a sibling conflict and underline the cultural stereotype that brothers fight with each other.

To end, I present a further case study from the surroundings of the Enniki lineage. It involves a triad consisting of the men of Enniki, in the main Mahaite Ningaha and his lineage brother Numbia, Mahaite's *eilehe* lineage sibling Selmbia, and their group of *meinheil* around Mahi and his brother Saasie from the *tineme* line (D2) of Talkeneme. The events about to be recounted happened one evening early in 1988. What started off as a habitual row in Selmbia's family soon escalated into a very serious conflict between the three parties, in the course of which it developed a very distinct and significant pattern.

Selmbia is married and has two wives. His first wife is called Hiale – she is Mahi's and Saasie's full sister – the second one, who is distinctly younger, is called Laisisie. Both women have children. They are one of the few cases in which a polygynous household resides together in the same location, in the hamlet called Sualebanau, which lies immediately below Enniki and which borders onto the road. Family relationships are, and have been, strained ever since Selmbia married Laisisie and brought her to stay in Sualebanau. The relationship between the two wives is marked by a form of reluctant cooperation which, at times, is interrupted by bursts of violent rows and even fights between the two, and it is one of the recurring attractions for the neighbours from Enniki and Tillenge to watch Selmbia breaking up fights between his wives and scolding and beating them. In the past, Selmbia's treatment of Hiale has led to a number of confrontations between him and her five adult brothers. They have also faced each other in front of the village magistrate a number of times about these matters. Hiale's brothers

Mahi, Saasie, Nungusi, Suwete and Wasseki live at the lower end of Warengeme 2, about ten minutes' walk away from Sualebanau. Especially Mahi and Saasie are on very close terms with their *meinheil* Mahaite and Numbia, whilst their relationship to Selmbia is, naturally, rather strained, and marked conspicuously by avoidance.

Relations within the Selmbia family deteriorated even further when, early in 1988, Laisisie's newborn baby died a few days after birth. It was not the first death of a child in the family. Hiale had lost a baby only a few months before. No inquiry was made into the circumstances of the death and the body was buried quickly. Selmbia, however, was convinced that the cause of death lay in the strained relationship between his two wives and their contempt for, and jealousy towards, each other. A violent quarrel between the two wives one evening, a short time after the funeral, left Selmbia absolutely beside himself with rage. He quietened down after a few minutes but his sudden calmness was ominous. Laisisie and Hiale, sitting a few metres apart and with their backs turned towards each other, were still muttering under their breath when Selmbia wordlessly arose from the fire and went into his house. Things remained quiet for a few minutes and the spectators in Enniki gradually dispersed and returned to their fires.

The next sound to be heard came from Selmbia's hut: it was the sound of a bush knife being ground. It conveyed the impression that Selmbia was seriously planning on harming his two wives. Both Laisisie and Hiale rose from where they were sitting, Hiale uttering a long drawn out "yyeeiiiii, yyeiii, yiikkii" and then both fled the hamlet and vanished into the dark. Hiale went up past Enniki to Tillenge. At the time, Kelly, her *ningal anheil* (Mahi's son), a lad of about sixteen, was in Tillenge. When he heard what had happened he stormed down from Tillenge, showering Selmbia (his *agel anheil!*) with the wildest abuse and then departed for his hamlet Akumeneme. Hiale followed him shortly afterwards. Numbia, who was sitting in front of his house in Enniki, began chiding his brother Selmbia, telling him how everybody was fed up with his marital problems and accusing him of impairing their relations to Hiale's brothers, their *meinheil*. At this moment, Selmbia appeared on the little plaza in Enniki, armed with his bush knife. He took off his singlet and stuck his bush knife into the ground like a spear. Then he challenged those present, mainly his two siblings Mahaite and Numbia, bidding them to come to him and state their complaints and saying that he would then teach them not to become involved in his affairs. It was clear to everyone that he was highly excited and almost beyond self-control although outwardly he appeared calm. Between his sentences he kept uttering short exclamations of "uiuiuiui", a sign of high emotional excitement. Nobody answered him; the residents all busied themselves with whatever they were doing at the moment. Selmbia remained standing there, waiting for a response. When it became apparent that nobody was willing to accept his challenge he took his bush knife and went back to Sualebanau, calling the others cowardly bastards on the way.

It had become silent all around, and the people in Enniki slowly resumed conversation in whispers. Then, from a few hundred yards down the road, loud shouting was heard and as the shouting came nearer the name "Selmbia, Selmbia" was discernible. It was Hiale's brothers coming to challenge their *meinheil*. First, Saasie, Nungusi, and Suwete appeared,

shortly afterwards followed by Mahi and Wasseki. They were all armed with heavy sticks and Mahi, the eldest brother, and Saasie, the second eldest, were stripped down to their underpants (they had hidden their bush knives in the grass some ten yards down the road). All five of them heaped abuse on Selmbia and called him the most vile names. Mahi spearheaded the group and did most of the talking or, more to the point, most of the shouting and screaming: "Who do you think you are, did you think our sister is a wild pig with whom you can do what you like; you thought that she was from a different village, far away, and had no brothers who would come and defend her, you shithead, well you were wrong, we're her brothers, and we're here to deal with you, you fucking bastard .... ." Significantly, the majority of the exchange of words was in Tok Pisin, and not in Wam. Up till then Selmbia had remained out of sight in his hut. He then appeared, armed with his bush knife and a spade. He set himself up on his side of the small ditch which marked the boundary of his hamlet towards the road. Mahi and his brothers stood on the other side of the ditch, only a few yards away from Selmbia. The ditch functioned as the boundary between the public territory of the road, and the private area of Selmbia's hamlet. It also operated as the thin red line between open physical conflict and a mere, albeit violent, verbal confrontation. Nobody ventured across the boundary in either direction, well knowing that such a step would immediately lead to a fight and bloodshed. Selmbia remained silent throughout the whole drama and simply stood there, watching and waiting. After about five minutes the pitch subsided a little, and finally the five brothers retired to their hamlets, still ranting and raving on the way.

The event had drawn quite a crowd in Enniki. Selmbia's brothers, Mahaite and Numbia, and a few others were there as well but during the whole dispute they made no sign of becoming involved in any way. Later, they said that they would have remained outside even if it had come to blows, and that they in no way felt responsible for Selmbia because he had started it all through his own stupidity, and that he was clearly in the wrong. When Hiale's brothers had finally left, Selmbia started a speech of his own, maintaining that he could deal with his wives as he wished and that, after all, they were responsible for the deaths of two of his children. The speech was a monologue, and the listeners, one after the other, drifted away and left Selmbia to his own views.

Officially, the conflict was resolved the next day in front of the magistrate and the village councillor. Selmbia and his *meinheil* shook hands, the matter was declared as settled, and his wives returned to their hamlet. But, in effect, it had been bleached away only on the surface. Moreover, it generated strains between actors who had not been at the core of the trouble but only involved on the periphery, and it was onto these relationship sets that the conflict now indirectly boiled over. In the main, this refers to the relationship between Selmbia's brothers, Mahaite and Numbia, and their *meinheil* Mahi and Saasie (the other three brothers are only of secondary importance here), and to the relationship within the Enniki lineage, i.e. between Selmbia and his brothers. The relationship least affected in the end was that between the original conflict parties, because the strife had not opened any new rifts but only confirmed and deepened old dissensions. But for Mahaite, Numbia, Mahi and Saasie, who were intimately linked with each other through ties of marriage,

complementary filiation and friendship, the incident meant the severance of relations, at least for the time being. They all felt deep shame at what at happened; Mahaite and Numbia due to the behaviour of their *nauwie* Selmbia, Mahi and his brothers because of the way they had shown contempt for a *meinheil* and for openly displaying readiness to use force and accept bloodshed. Mahaite and Numbia avoided seeing their *meinheil*, and Mahi and Saasie no longer came to Enniki. Sikergeni, their common granddaughter, still commuted between the two hamlets but she was accompanied back and forth by Mahi's and Mahaite's daughters and no longer by the two men themselves. It was only after a few weeks that the group of *meinheil* returned to their old habitual pattern of interaction. The longest lasting and deepest effect the incident had was on the group of Enniki lineage brothers. Mahaite and Numbia severed all contact they had with Selmbia and remained on nonspeaking terms until I left the field four months later. Selmbia himself was maddened about the way his brothers and their families had interfered with his family affairs and decided to move residence down to the Ulambe creek in Wohimbil. He actually started building a house there but it was doubtful whether he would ever go to reside there due to the central location of Sualebanau on the road and the fact that Selmbia was planning to run for office in the forthcoming village magistrate's election.

Admittedly, the basic pattern of the case study is unusual, since it shows a group of *meinheil* pitted against each other in a very direct manner. It contradicts the basic cultural proposition that cross kin do not get into conflict with each other. On the other hand, the way the conflict develops displays a typical pattern, in the sense that the actors involved are able to restrain themselves and that actual physical violence is avoided – if it had involved a group of siblings it would most likely have come to blows – and that the conflict, in the long run, is deflected on to the group of lineage brothers. It corroborates the pattern of social practice in which the relationship between agnates in general and brothers in particular features a marked strain of latent antagonism.

In the course of this last chapter I have tried to show how the effective social order is produced and reproduced in the flow of time and how the social process is structured on, and around, the enactment of various exchange events called forth by individuals passing through distinct stages of the life cycle. The conceptual starting point of the process is the differentiation made between people whom one recognizes as having a basically identical stance towards the natural and social environment, with whom one believes one has substance in common, and with whom one entertains the basic code of "sharing". These are one's agnates or parallel kin; this category reaches its highest condensation in the notion of siblingship. As a complement, and in opposition to, this segment stand the cross kin. In conceptual terms they are the "mother's people". A person enters the social universe "through" his mother's people, he or she marries to the mother's people, and one passes out of life through the hands of the mother's people. Overall, the provision of sustenance and the issue of growth is ascribed to them. People grow strong off the nurturance provided by cross kin. The basic disposition towards cross kin is governed by the code of formal exchange. Kin statuses, however, are not rigid, and actors adapt their relation towards each other according to the habitus they apply to each other in the course of ongoing interaction.

This, in turn, is facilitated by the flexibility of the principle of exchange and the commutability of the exchange spheres. The notion of siblingship connotes a form of ideal male relationship which, in social practice, is hardly ever attained. In reality, siblings contest with each other over the equal sharing of imposed common obligations, for scarce resources, and for positions of precedence, while male cross kin display a distinctly more concordant and deferential relationship pattern. The overall pattern of allegiance and adversity that emerges discloses that the positively-charged male relations are those which are mediated through either sisters or mothers, whilst in purely agnatic linkages the antagonistic element of contention prevails. In terms of the creation of relatedness the notion of nurturance clearly wins over the idea of shared substance.

NOTES:

[1] Men often explain their wife's behaviour during such a marriage event, and account for their own passivity at the same time, by referring to their successful appliance of love magic: the woman, they say, acted so obstinately because she was under the spell of the magic the man had prepared for her; the husband himself did not have to go into action – if he had done so he might have risked an awkward confrontation with his future affines – because he could rely on the potency of his magic. The women, naturally, have their own interpretations of who did what to whom during marriage procedures, and they also include the application of magic.... .

[2] I do not know the exact reasons why, or under what circumstances, Atuhembel gave Waleti his name. To the best of my knowledge Atuhembel bestowed no land or other forms of estate on Waleti.

[3] The issue of the realm of the dead today plays an important role in the millenarian ideology of the New Apostolic Church. I return to this topic in the context of the millenarian world view in part two of the thesis (cf. chapter 16).

CHAPTER SEVEN

RITUAL AND COMPETITION

Superimposed on the system of social formation runs the ritual system, the tamberan, the basic organization of which I have described above (cf. chapter 4). The two systems are, naturally, closely interlinked. The participants in the ritual system are also actors in the underlying social system, recruitment to the former follows the same channels as the latter, and due to the commutability of the spheres of exchange the ritual system is entwined with the working order of the basic social fabric. On the level of meaning and understanding, however, the cult system ranks on a different level altogether. Women, otherwise vital social agents, vanish from the visible scene. The tamberan is exclusively the domain of men; it differentiates the male from the female world; moreover, it places men distinctly above women. Through the claim of possessing and controlling the forces behind the secrets of fertility and growth which otherwise appear to be an inherent quality in women, men create hierarchy over women and are able to legitimize their ascendancy. It also provides the foundations of male solidarity vis à vis women.

All Wam religious thought, experience and practice is located in, or linked to, the tamberan. It is a vast and all-encompassing sphere and, in the end, it dominates all aspects of cultural existence. In the present treatise I only touch a few of the issues which I believe to be of relevance for my purpose[1]. I make no claim to be well versed in the lore of the tamberan. It was long ago that the Wam brought the tamberan to life; moreover, with a few exceptions, the men were unwilling to waken it from its sleep through talking about it. The possibility that the guardians of the tamberan, the *arukwineme* sorcerers, would hear about it was too great a risk. The days of the tamberan, the men said, were over. Still, for the themes of equality and hierarchy, and for the principle of exchange in society, the secret men's cult is a central domain, and in the course of this chapter I shall elucidate some of the aspects of the ritual process and the nature of relationships this process engenders. From there I shall go on to describe the wider system of bigman politics and the balance of power in the traditional social system.

THE TAMBERAN CYCLE

On the level of the secular social system – if I may call it so in distinction to the ritual system – the men differentiate not only between male and female kin but also between cross and parallel kin. In procreation, men provide substance, whilst women in general, mothers, and by equation sisters, in particular are allotted the vital role of providing sustenance. The notion of the provision of sustenance is extended to include male cross kin as well. Young boys and adolescents (and girls too, of course) grow on, and gain strength through, the sustenance supplied to them by their mothers and, in the course of the process, become saturated with female essence. They are potential males but as long as they rely for nurturance on their mothers and sisters they will not become real men. It is here that the tamberan steps in. I believe one of the pivotal aspects of the tamberan is the idea that the

provision of sustenance is taken out of the hands of women and placed in the hands of men. In the domain of the tamberan it is the men who feed other men. Males only become men when, especially during initiation, the role as food providers is taken over by other men, namely their *pinandil*, their ritual exchange partners. This kind of nurturance by men is accompanied by a reverse process. At the same time, more precisely shortly after seclusion and initiation, men commence the habit of ritual purification through bloodletting which is performed through incision on the glans of the penis. This rite is called *nassere* (to cut) *enumbo* (penis) *nimbalme* (blood). The central idea behind it is the elimination of the female essence which has accumulated in childhood and up to the occasion of initiation and which is believed to be located in the blood. Adult men revert to this form of bloodletting throughout their life in order to purify themselves regularly from the female essence they ingest through their contact with women in general, and through the food prepared by their wives and through sexual intercourse in particular. It is specifically performed on occasions when men set out on a venture which requires potentiated male strength, such as warfare, hunting, gardening, but also sorcery and amorous adventures. Never more than one cut is made on the erect penis, and the different points on the glans where the incision is made connote different purposes: when the purpose is hunting or planting yam a cut is made on the top right side of the glans, in warfare and sorcery it is the lower right side, whilst for the purpose of love magic it is the top left side (here the blood is collected and mixed into food which is then given to the chosen woman). Men perform this ritual in privacy at streams or rivers so that the blood flows into the water and is washed away, thus becoming inaccessible for the use of sorcery. Men equate the habit of bloodletting with female menstruation (*wari kermbe*, to sit down in blood; *kermbe* is the term for menstrual blood, *nimbalme* the generic term for blood). Just as menstruation bears the signs of the female potential of fertility and growth, men subject themselves to an analogous process in their quest to attain strength and maleness.

The essence of the tamberan lies in wresting the secrets of fertility and growth from the women and creating and keeping up the powerful illusion that the maintenance of culture and society lies purely in the hands of men, and that they are solely responsible for maintaining cultural existence. A lot in the tamberan has to do with the deception of women and other noninitiated persons, and the men admit, and are even proud of the fact, that they are deceiving the women and telling them lies about what really goes on behind the veil of secrecy within the tamberan (e.g. the secret of the "voice" of the tamberan, where all the pigs and yam go to, which the women help to produce, during the period of seclusion, etc.). Nevertheless, not all is deception, moreover, the men become the victims of their own illusions. Through controlling the tamberan, men are able to subordinate women and legitimate their claim to ascendancy over them whilst, at the same time, they become subject to the rigorous dominion the tamberan exerts over them.

Beyond the distinction between cross and parallel kin there goes the notion that men as such form a category of humans that has much in common; in other words, men have a parallel stance to their surroundings, especially in their status vis-à-vis women. In an extended sense, all men are brothers on the basis of a shared male habitus. Within the

tamberan, it was explained to me, brothers entertain ritual relations with each other, brothers initiate each other, and brothers exchange with each other. In reality, this is actually the case in something over fifty percent of all kawas relations. In some of the lineages which split into sublines it is explicitly stated that the *eilehe* section kawasses with the *enaha* section though, at the same time, there exist about just as many *pinandil* relations between male cross kin as there do between agnates, but they see no contradiction in this. Here the men are not drawing on the kin classification in the strict sense of the term so much as operating on the basis of the extended principle of siblingship. The tamberan connotes a form of "brotherhood of man" which is superimposed on the secular social system. What I believe is the crucial point here is that through the dual division of the ritual system, the cross/parallel distinction is reintroduced into the system in a form in which the men of one moiety initiate the men of the opposite one into the tamberan. Taking into consideration that one of the primary aspects of initiation concerns the saturation of the initiates with specific, highly-valued foodstuffs, it becomes evident that the ritual system is actually replicating the basic themes of the underlying social system: the classification into the sharers of substance and the providers of nurturance. The tamberan "gives birth" to a set of siblings (the initiates) which, during seclusion, have been nurtured by their ritual partners (conceptually like cross kin). The members of the same moiety refer to themselves as belonging to "the same spear", *perengele isili*, because they "shoot food" at their ritual opposites, as the men say. The idea of giving of food is complemented by the aspect of male competitiveness and (ritualized) aggression.

As I explained in a previous chapter, a man is embedded in various ritual groupings and layers of groupings. He is a member of one moiety, at the same time he belongs to a specific *serengel pinandil*, and he partakes in either the *ambuli* or the *pengame* section, which comprise a number of *serengel pinandil*. Let us assume that moiety A is initiating a group of men from moiety B. In terms of the replicated cross/parallel distinction it is noteworthy that the initiates who are taken into seclusion are denoted as the *nielehi*, that is the children, whilst the initiating group, in our case moiety A, are metaphorically referred to as the mothers (*ni*). During seclusion, which lasts for several weeks, an initiate is fed through by his "mother". The amount of food said to be consumed during seclusion is immense and the initiator does not only rely on the stocks of food he has produced himself. Moreover, he relies heavily on a group of helpers from his own moiety (from both his own and different wards) to support him with food which is then passed on to his "child". This group of helpers, tellingly, is referred to as one's *numbwandil*, which is the term for breasts (susu in Tok Pisin). A man, on average, has four to five such helpers. The picture which emerges, I believe, speaks for itself. The tamberan, itself endowed with anthropomorphic and, to a certain extent, female qualities, is brought to life and controlled by men and, in turn, brings forth new children in the form of boys-become-men who have been nurtured and cared for by male mothers who themselves have relied on (male) breasts for the provision of sustenance. In the grand performance of the tamberan, the real women fade from the scene and are banished to the background, and the stage is left to the men to enact the cultural drama of sustaining life and society.

I am afraid I can say only little about the deeper belief contents, the specific rites, and the rich symbolic imagery and acts performed in the context of the ceremonial system, especially in regard to the highest grade, the *kwal*. The *kwal* has not been staged within living memory in the village, and the only bits of information I received came from two men who had "stolen a look" at the *kwal* procedures during an initiation in the village of Eimul, back in the sixties. I also see no point in drawing on data from surrounding groups (e.g. Tuzin 1980; Mead 1938, 1940) and speculating on faintly possible common grounds, since evidently the Wam differ culturally in so many aspects from their neighbours. I shall therefore stick to what the Wam men were able to tell me about their own tamberan.

Common to all three grades is, firstly, the aspect of complete secrecy from the women and other noniniatiates and, secondly, that they pivot on the basic elements of the revelation of those closely guarded secrets to the initiates and the permeation of the neophytes with specific, highly-valued foodstuffs. *Nau* and *nambo* rank as equal and both are regarded as comparatively benevolent tamberan, whereas *kwal* is regarded with awe and feared for the potency it emanates. In terms of guarded secrets there is no distinction between the *nau* and *nambo* grades. Here, revelation concerns the nature of the "voice" of the tamberan, i.e. the secret of the sacred trumpets. Upon entering either the *nambo* or *nau* grade, the initiates are shown the trumpets and gradually learn how to play the various pieces. When and where this instruction actually takes place I cannot say definitely. The men claimed that it was not part of the procedures during seclusion in the bush. It is possible that the secrets are revealed to them when they enter the ceremonial house for the first time after seclusion. The two grades also appear similar, if not identical, in terms of ritual procedure, i.e. in relation to the various ceremonies following the period of seclusion. A point they definitely do differ in is the issues the two grades deal with. While the *nau* grade is clearly centred on the yam, the *nambo* is focused on pigs. This absorption with the two most valued, and culturally significant, food items takes on a very immediate form, in the sense that during seclusion to the *nau* grade the initiates are literally gorged with yam, up to a point where, figuratively speaking, their bodies become completely saturated with the essence and spirit of yam, whilst in the *nambo* grade they go through the same process but with pork in place of yam. The effects of this fattening are visually clearly discernible. The initiates enter seclusion as skinny youngsters, and they re-enter the realm of the village after seclusion as thickset young men, richly adorned and with a beautiful, shiny skin. This physical transformation not only signifies their newly acquired status and identity, it also vividly confirms the beneficial powers of the tamberan and grants it its legitimation and, simultaneously, the men's claim to ascendancy on the strength of the fact that it is they who control the tamberan.

In the initiation to the *kwal* grade, the men go through a similar process but the length of seclusion is distinctly shorter and the emphasis is not so much on the saturation side as it is on the aspect of revelation. The initiates – in the *kwal* stage these are all fully grown men – are again fed with pork and yam but, through the admixture of various magical substances, the effect of ingestion is potentiated. Also, various foodstuffs which in everyday life have little cultural value, for instance bananas, are brought into play, and, last

but not least, the consumption of cassowary (*nembegele*) meat plays a significant role[2]. The ultimate climax is reached when the initiates are shown the figurative representations of the *kwal* spirit which the *kwal* spirit is said to have made itself, self-portraits so to speak. This does not take place in the ceremonial house in the village, but in a secluded small grass hut deep down in the bush. These representations consist of two sets of paintings done on pangal, called *wamel* and *wori* respectively. The images, my informants told me, resemble the famous *nggwal*-figures of the Abelam ceremonial houses.

A new tamberan cycle is only ever started when the immediately foregoing one has been concluded. This occasion is marked by the *pinandil* feast during which the men do what is called rausim hed bilong tamberan (throw away, get rid of the head of the tamberan). After the cycle is over the ceremonial house is left to fall to pieces and the slit-gong is discarded and withers away. These are important elements. Each new cycle contains the significant aspect of renewal and regeneration, and building a new ceremonial house and making a new slit-gong constitute meaningful elements.

The new cycle is initiated by a series of encoded exchanges between the two moieties in the form of food prestations which contain symbolic messages from one half to the other. The initiative is in the hands of the moiety which is to be initiated, in our hypothetical case moiety A[3]. Moiety B in this case rank as the holders of the tamberan. The cycle starts when moiety A begins an unmotivated flow of food prestations (in the *nau* grade these consist of yam only) to their ritual partners of moiety B, unmotivated in the sense that at first sight there is no apparent reason for the prestations since all open debts have been settled. The message behind the prestation could be described as "it is time you gave us back the tamberan". The men of B understand the hint and, if they are in agreement, they will send back a message in the form of a return prestation. A pig is killed and decorated. The central symbol is a stone adze which is inserted into the pig, and which is then given to the men of A. It signifies B's acceptance of the challenge and, at the same time, it is a call for moiety A to go out into the bush, fell a kwila tree, and start making a slit-gong (*wahute*). In a next step, the third transaction, the men of A kill a pig and cook it in an earth-oven (mumuim in Tok Pisin) together with some yam. Half of the pig and the yam go to the women of moiety B, as a sign requesting them to help their men during the hard work to come; the other half goes to the men themselves. Hidden in between the pieces of meat is a stone knife and a coconut shell which are a sign for moiety B to start building a new ceremonial house and preparing a smaller house in the bush to which the initiates will retire to during seclusion. In due course the men of moiety B start erecting a new ceremonial house, whilst A starts making the slit-gong. Both sides are supported by their *numbwandil* from the surrounding wards and villages. These will have received small parts of the prestations made, requesting them to lend their support. At the same time, the B-men start preparing their gardens and building up large supplies of food in preparation for the seclusion period which is about to begin. Again they are helped by their susu.

The beginning of the actual period of segregation is marked by a mock attack by the men of A on the newly constructed haus tamberan which is held and defended by moiety B (it is in possession of the tamberan). The men are armed with sticks and thorny pangal

(sago palm ribs). The occasion is characterized by a high degree of ritualized aggression and, although the fighting is kept under control, the infliction of minor wounds is not uncommon. The fight ends with the men of B kidnapping those selected for initiation whilst the remaining men of the A moiety are repelled. The initiates are then taken from the village and brought to the place of seclusion in the bush, while the women are told that their sons and brothers have been abducted by the tamberan.

The initiates stay hidden away in the bush for a period of two or three months, where they remain under the surveillance of their *pinandil*. The initiates' bodies are covered in black paint. They are forbidden to wash, they are not allowed to drink cold water, only heated water instead, and they are tabooed all kinds of sweet and cooling food (coconuts, bananas, sugarcane, vegetables, etc.). All they do get to eat is yam baked in the fire, but of this they are fed immense quantities, yam, as mentioned above, which is provided by their kawas, their male mothers, and their *numbwandil*. There is no imparting of formal or secret knowledge during seclusion, although for instance Mahaite Ningaha said that during his time in the bush he had been taught by his kawas Atuhembel a lot about the history of the different wards, past initiations, and the relations between the different ritual groupings and descent lines, but this was more on an informal basis. What the initiates remember most vividly is the vast amount of yam they had to eat. From time to time they were also given pork, but the main diet was yam. Even when they were full to bursting, the flow of food did not stop and they were forced to eat what they were given, and if they did not comply they were subjected to beatings. In this way they gradually grew fatter and stronger as their bodies became saturated with yam.

The length of seclusion is decided on by the initiators of moiety B. The reintegration phase is marked by the staging of a row of ceremonies. The first of these is called *wahute meresi itineme* (the first slit-gong feast). It is staged by the initiators, in the present case the men of moiety B, together with their *numbwandil*, whilst the initiates are still in seclusion. It marks the approaching end of the seclusion period. During the ceremony the women associated with the B moiety dance with their carrier bags (*luhe*, limbum) filled with food, whilst the men dance in pairs, carrying a stick on their shoulders, to which bananas are attached which symbolize pigs. Clods of earth are wrapped in leaves representing packets of sago, and bundles of *walio* grass are tied to sticks and carried by men symbolizing cassowaries (*nembegele*). The messages which these symbols carry have a double meaning. Firstly, they indicate that the initiates are being sustained with ample food by their *pinandil*, secondly, they are also a hint to the opposite moiety (A) that they will be expected to recompense all the food provided to their men during seclusion. After the *wahute meresi itineme*, the men of moiety B start making the head decorations the initiates will wear on the day of their re-entry into the village. There are two forms, called *hangame* and *pelangehu*.

On the day and night before the actual end of seclusion and the reappearance of the initiates in the village, the *paineme* (Wam for "big", "large") singsing is staged. It involves a smaller food prestation made by the men of moiety A to the villagers of surrounding wards and villages who, from time to time, have made smaller contributions to the

initiation (these do not include the kawas and their helpers). The food is distributed and consumed during the night. The men of both moieties appear armed with bows and arrows and spears, introducing the same moment of ritualized aggression to the event as at the beginning of the seclusion, when the initiates were abducted to the bush. In the *paineme* singsing only kundu (hand-drums) are used. It basically consists of a repetitive chorus and ritualized, in the form of chanted, speeches of praise and censure by single actors. The next morning the initiates are taken down to the river by their *pinandil*, where they are first soundly beaten with pangal by their kawas and have the black paint rubbed off their skin with stinging nettles. The initiates are expected to go through this without showing any signs of sufferance, otherwise they are exposed to the derision and contempt of their *pinandil*. After this ordeal they wash for the first time in months; then they are decorated by their kawas. Only a few of the initiates are given either a *hangame* or a *pelangehu* to wear (in the *nau* initiation of 1960 there were three *hangame* and four *pelangehu*), the others adorn themselves with croton leaves: the men with more reddish skin wear the yellow *isokwor* and *tengessi* crotons, the men with black skin the red *melmbe* and *menembu* crotons.

The re-entry into the village is a mixture of overwhelming pride, aggressive joy, and wild astonishment about the transformation the initiates have undergone. Each initiate carrying either a *pelangehu* or *hangame* is led onto the ceremonial ground by his *pinandil*, who proudly presents "his" intitiate to the large gathering and, at the same time, challenges the men of the opposite moiety, maintaining that they themselves had never been fed so much food and given such beautiful headdresses when they had been initiated. Amongst others, the initiates are greeted by their mothers and sisters, who first pretend not to recognize their sons and brothers, and when, at long last, they are told that it is them who have returned from the tamberan, they weep for joy and proudly show them off to the others, exclaiming what fine men the tamberan has made of them. The re-entry into the village is accompanied by the so-called *waki* singsing. All in all, the festivities go on for two or three days. Each morning the initiates are taken back to the river and are subjected to the same ordeal as on the first day. Then the *hangame* and *pelangehu* adornments are exchanged and other initiates have the honour of wearing them. The process of re-entry into the village is repeated until all the initiates have had the chance to make their appearance in full array. After the third night, the *waki* ends and the *hangame* and *pelangehu* are discarded. The initiates come to reside in the village but they remain segregated in the ceremonial house and are forbidden any contact with the women and children. Also, they still have to observe the strict taboos they were subject to during seclusion. It is only after the next ceremony, which is called *buhi sungule itineme* ("first sugar cane and greens") that they revert to normal village life again. In the *buhi sungule itineme* ritual, the initiates are re-introduced to all the cooling and sweet food items they were forbidden to taste during seclusion. These include a long list: various forms of banana (*samakele*), taro (*ningaha*), sago (*nohokule*), different types of coconut (*omboreme*), breadfruit (*suale*), various greens (*sungule*), sugar cane (*buhi*), the fruit of the ton tree (*abute*), and a variety of others fruits. From then on they are also allowed to come into

contact with cold water. The men are given by their kawas a piece of each food item to taste, then they have to break the remaining part over their knee and throw it away.

Significantly, this is almost the identical ritual procedure young women go through on completing their period of seclusion after first menstruation (*wolessumo* or *woitur wonimbe*). Female seclusion is approximately of the same duration as that of the men. The young women are sustained during this period by their cross kin. On re-entry into the village the woman is ritually washed by her father's sisters. Like her male counterparts she is subject to strict food taboos. The taboo period, however, is distinctly longer than that of the men. When this period ends, the father builds a large container (similar to those used in ritual exchange during the *serengel pinandil*), which he then fills with all the food items that the woman was forbidden to eat. She then goes through the same process as the male initiates of testing each food item and breaking the remainder over her knee. Afterwards the father presents the woman's *agel anheil* with the remaining food and a pig, as compensation for the nurturance provided to the girl during seclusion. Thus, it goes to show that male and female initiation follow comparable paths and are based on a similar principle. Tellingly, in metaphorical terms, the first menstruation is referred to as the women's tamberan. Men and women, each in their own sphere, enter adulthood through their respective tamberan. After first menstruation the father-daughter relationship is marked by strict avoidance where food is concerned. A daughter can no longer prepare or cook food for her father, at least not until she gets married and has children of her own.

In the night following the *buhi sungule itineme* the first of a long series of singsing is staged involving the *ambuli* and *pengame* sections. As I described in the chapter on ritual organization, the *ambuli* and *pengame* sections cross cut the moieties. It is a point worth noting that now, after the initiates have been reintegrated into the secular sphere, the dual division is revoked, at least intermediately, and the men step on the scene united, expressing their solidarity as males and underlining their status in opposition to the female world. Whilst the men play the trumpets outside the ceremonial house together – *ambuli* and *pengame* being played alternately – the women dance together on the ceremonial ground, with their backs turned towards the players and holding either pieces of pangal or otherwise cloth behind their heads in order to block any view on the men playing the trumpets. Until the final *serengel pinandil* feast which ends the cycle, *pengame* and *ambuli* are repeated on numerous occasions.

After the *buhi sungule itineme* and the first performance of *ambuli* and *pengame*, the initiates return to their hamlets and village life returns to its normal rhythm. Now begins the time for the men of moiety A to repay all the debts which have accumulated over the period of initiation. Gardens are established, the stock of pigs is increased and large resources of yam are built up. In this process the newly initiated men can, in turn, rely on the support of their own *numbwandil* and other close associates. As soon as a sufficient stock of food has been built up, a long series of food prestations commences. The first person to receive compensation, in the form of at least one pig and a large amount of yam, is the kawas himself. This repayment is not a great public event which concerns the whole ward or even village; it is a more restricted affair, involving the single *serengel pinandil*, of

which the initiate and his kawas are part, and the *numbwandil* of the two central actors. The event is accompanied by a high degree of ritualized antagonism, especially on the part of the receiving kawas. He challenges his opposite, telling him to prove to him what a strong man he (the kawas) has made of him (the initiate) with all the food he was fed during initiation; he belittles and reproaches the donor for the small amount of food he is being given, maintaining it is an insult to his status and that he (the initiate) is not worthy of being called a tamberan man. The donor, in turn, answers by increasing the size of the prestation, drawing on reserves which are strategically held back in the beginning. The event continues in this way until the recipient, keeping up a facade of indignation and protest, grudgingly declares himself satisfied. At the end of the event, the recipient makes a small, token, return prestation to his *pinandil*, thereby indicating his acceptance of the prestation and retaining the exchange character of the event.

Over the next seasons and years, the men of moiety A are required to recompense the men of the opposite moiety from all the surrounding wards and villages who contributed to the success of the initiation in some form or another (helping to build the haus tamberan, contributing food during the seclusion period, making an appearance during the various singsing after seclusion). They gradually work themselves outwards, paying off their debts to the immediately surrounding wards first and, later, to the villages of the neighbouring groups. They are helped by their kawas in this process but the main burden falls on the moiety that has recently been given the tamberan. For two reasons, this is usually a very laborious and contentious affair. Firstly, because there is no great motivation to make these prestations, especially to the more distant wards and villages, since otherwise the rate of interaction with, and feeling of allegiance towards, these places is low. Often it is only the impending threat of sanctions and retaliations which makes them meet their obligations. Secondly, it demands the joint efforts and the cooperation of the members of the same moiety, and here one comes across the same pattern of allegiance and adversity that one meets in the secular sphere between siblings and agnates. Within the ritual system, the relationship of primary allegiance is between a man and his *pinandil*. It is based on the principle of exchange and engenders a relationship of equality, even if this equivalence is often masked by a superficial and ritualized form of dissension and aggression. With the men of one's own moiety – with the exception of the men of one's *serengel pinandil* and of one's *numbwandil* who, however, often are recruited from neighbouring wards – one stands in a sibling-like parallel relationship which implies the sharing of common duties and obligations, and competition for precedence. Here it is frequently only the influence of the bigmen that can bring the men together and make them cooperate. As an aggravating factor one must also take into consideration that by this time the men are usually not only occupied with tying up their own ceremonial cycle, they probably are already engaged again in another cycle in a different ward where, for instance, they are a *numbwandil* to another person. Thus, they are under considerable pressure. Also, one must not forget that the secular social process continues, and that it is quite likely that the death of a family member occurs which will also require the investment of considerable resources.

The cycle is finally concluded with the staging of the large-scale *pinandil* feast. This is often years or even decades after the actual initiation took place (I recall that the initiation to the *nambo* tamberan in Warengeme was held in 1935 whilst the concluding *pinandil* feast was performed in the mid-sixties). The preparations for the *pinandil* feast begin at least a few seasons before the actual event is staged, with the raising of a new stock of pigs and the cultivation of not only a large quantity but also a high quality of yam, of both the long ceremonial yam (*piressi paineme*) as well as the short yam (*melehei*). It is a long process which not only demands a high investment in time and labour but also a high degree of skill and experience in yam gardening. Several weeks before the actual feast, each *serengel pinandil* of the specific ward involved erects a ceremonial mast which is then decorated with ripe coconuts (drai, *nemeti*) equally contributed by the members of the *serengel*. The work of actually hanging up the coconuts is done by a group of external helpers who habitually perform this task. Thus, when Mahaite Ningaha is directly involved in a *pinandil* feast he has a group of helpers from the village of Selni who do the work for him. When they, in turn, stage such a feast he performs the same task for them. The decorated mast is called the *pinandil*; it symbolizes the unity of the *serengel pinandil* group.

In the night before the feast actually starts the various *serengel pinandil* trumpets are played for the last time. Towards dawn the trumpets are taken from the ceremonial house and are returned to their place of hiding in the bush. Thus the tamberan leaves the village again. The next day the men prepare their yam containers (*wangul*) ready for the actual exchange. The stocks of yam are brought from the storage houses in the gardens and heaped into the round containers. The biggest and most beautiful *piressi paineme* – length and girth are only two of the criteria of perfection – are selected, decorated with special croton leaves (each type of long yam is associated with its own species of croton), and hung up horizontally on scaffold-like constructions so that the entire ceremonial ground is covered by a kind of yam canopy. In the course of the day, the men review, scrutinize and pass judgement on the exhibited yam, distinguishing the most perfect specimens with markings of lime. Towards the evening the so-called *paitinge* (translated as small food) consisting of yam soup and taro is cooked and distributed to the men who decorated the *pinandil* masts with coconuts. At night the *ihuore* singsing is staged, in which only hand-drums (kundu) are used.

The climax of the *pinandil* feast follows the next day. It is the time of the great exchange competition, the resis yam (yam race) as the people refer to it in Tok Pisin. First the pigs are brought onto the ceremonial ground; tied to poles, they are lined up in a row, after which they are exchanged between kawas, killed and dressed, and prepared for cooking. After that the actual yam exchange begins. In an atmosphere of intensive competition and excitement each kawas with his helpers transfers his yam from his own *wangul* to that of his *pinandil*. It is not a mechanical exchange; instead it leaves much room for intricate strategies, bluffing and surprise tactics, such as keeping back hidden reserves until the last moment. When it looks as if you are beaten, you bring forth the hidden stocks and pile them on to your *pinandil's* heap. Of course, it is possible that he is following the

same tactics! The aim of the whole competition is not to devastatingly defeat your kawas but merely to surpass him by a small margin. One does not try to humiliate him in public but merely to intimate one's supremacy, mainly with an eye to the gathered public. When one sees that he has no more yam to give, one adds a few more yam to his pile and leaves it at that. Backstage, everyone registers who surpassed whom in the exchange but, frontstage, the appearance of approximate equality is sustained. Any debts stemming from a *pinandil* competition are settled unobtrusively between the two kawas at a later date. The debtor presents his kawas with a present of cooked yam whilst, simultaneously, the latter prepares a yam soup which he gives to his kawas.

After the actual exchange, each kawas proceeds to distribute the pig(s) and yam he received to the group of people who supported him in the whole venture, retaining a part of the prestation for his own consumption. Often a man will replant some of the yam he received from his *pinandil*. The group of receivers invariably also includes all the women who have helped in gardening, raising his stock of pigs, and carrying the vast quantities of food from the various gardens to the village. To end the event, the coconuts on the *pinandil* mast are exchanged between the members of each *serengel*. These are again distributed to one's various supporters. Often they are planted in remembrance of the event. Thus ends a ritual cycle.

Taking into account the infrequency of initiations in each ward and the long duration of a cycle, it would seem that a man participates in only very few such exchange feasts in his lifetime. However, this, in actual fact, is not the case. These competitive exchanges take place much more frequently. Men often participate in the *pinandil* feasts of other wards as well; often funeral feasts, in which ritual partners and groups play important roles, expand into yam exchanges of the *pinandil* kind; and from time to time, single *serengel pinandil* groups stage their own, smaller, exchanges between members, which other groups are likely to join as well. These are all very much more secular events which do not contain all the ritual aspects associated with initiation, but since they involve the issues of yam growing, pigs, and maleness in general, the spirit of the tamberan is ever present.

Overall, *pinandil* relationships are regarded as extremely important. They rank in the same category as *meinheil* relations. Competition and ritualized aggression tend to mask the basically positive disposition of the relationship. Like a *meinheil*, a *pinandil* is someone one turns to for support in times of need. Kawas also cooperate in garden work. They give each other compartments in their gardens in order to plant food, and it is quite common that a man grants his kawas the usufructory rights to a piece of land in order to establish a garden; a garden, be it noted, where his kawas will grow yam which he will later use to compete with him in ritual exchange. In ritual relations the issues of competition and sustenance are juxtaposed. Two kawas sustain each other with nurture while, at the same time, they mutually take advantage of each other in ritual competition, winning prestige off one another and thereby hoisting each other up the rungs of the ladder of prestige. They challenge each other, and this is likely to place a considerable strain on a man's resources and abilities, but they do not exploit each other in order to attain ascendancy. The underlying ethos of the relationship remains one of equality.

Kawas also play important roles in the domain of hunting which, besides yam growing, is one of the other central spheres of men. Upon my question why kawas were of such significance, one man answered, "you white men have refrigerators (bokis ais), we Wam have kawas". What the man was implying here was that, while white people had the possibility of storing meat for a considerable length of time, the Wam were reliant on their kawas for the provision of fresh meat from hunting. Since it was forbidden for a man and his family to consume the meat of an animal he had killed himself – the same goes for the pigs a man, more precisely his wife, had raised – he had to present it to someone else for consumption, who would then proceed to cook it and distribute the meat to people of his own choosing. One's kawas was always the first address to turn to in such a case. Naturally, the arrangement was based on the principle of reciprocity, and the kawas would make a return prestation the next time he came back from a successful hunt. This kind of mechanism of exchange and distribution not only ensured a more equal spread of valued protein in the community, it also reinforced and sustained the network of reciprocal dependencies in the village.

In theory, ritual positions were transferred from one generation to the next patrilineally. But in practice, transmission followed the same paths as did other forms of allocative resources, i.e. they were transferred through matrilateral inheritance, through marriage or through name bestowal, as the case of Mahaite Ningaha in the last chapter showed. Moreover, the creation of new ritual partnerships was quite common and was effected on the basis of mutual agreement, without much ceremonial appendage. Very often new relationships were started on the occasion of *pinandil* feasts or similar events of ritual competition, when the helpers of two exchange partners, instead of contributing to the exchange of the two central actors, would engage in exchange with each other directly. On the other hand, the severance of existing relationships was not common but it was not unheard of. It was a risky step for a man to take, not only because it meant cutting himself off from the supply of valued pork, but also because it entailed barring himself from the means and forum of prestige acquisition, at least as long as no new relationship was established. One of the reasons for severing a relationship was when a man's kawas for some reason did not, or was not able, to live up to his obligations. Another reason was – this is the other side of the coin – when a kawas overloaded his opposite with the products of hunting which the receiver saw no possibility of reciprocating. This could happen when one man faced two or three men who shared a kawas position together, for instance, in the case of a father with two nearly grown-up sons who had not yet been fully integrated into the system. In such a case it was possible that the receiver felt offended by his kawas and severed the relationship.

In the course of the last two chapters it has become evident that the flow of the social process is governed by a pervasive dualistic cultural design. In the underlying secular system the essential distinction is made between cross and parallel kin with their corresponding codes of "sharing" and "exchange", while superimposed on it is based the ritual system, which contains both the moments of distinction and replication. It distinguishes the men's world from that of the women and children, whilst at the same time

it replicates the basic themes of the provision of sustenance and the sharing of a common stance. It is through the ritual system that men legitimize their ascendancy over women and create the appearance of male solidarity and equalness vis-à-vis women.

The two systems are founded on the same principle, reciprocal exchange, or, to be more precise, it operates on a system of reciprocities. Each event of formal exchange actually consists of three stages: 1. the pooling of the items of value for exchange, 2. the exchange itself, and 3. the distribution of the items received to the selected group of men and women who helped the exchanger to make the prestation in the first place. Although they appear to be of only secondary significance, steps one and three are of great importance since they link a wider range of actors into the event than the actual act of exchange suggests. Nevertheless, the exchange events remain the pivots on which both the secular and the ritual process hinge. It is around these pivotal events that networks or relatedness take on form while, at the same time, they create precedents for all future interaction.

Furthermore, and this is a central issue, exchanges draw actors together. Not necessarily just those who contribute to the prestation on each side, but, more significantly, the two exchangers themselves. Exchanges produce strong bonds of engagement and commitment, and foster ties of *mutual* dependency which have ramifications going beyond the relationship of the two immediate transactors. The two exchangers provide each other with the vital means of creating and sustaining the essential subsidiary networks of relatedness. Thus, for instance, when a man presents his kawas with a pig he is not only providing him and his immediate family with sustenance but also granting him the means of keeping his supporters satisfied and strengthening their allegiance.

It is significant that it is exactly those segments and individuals in the social universe with whom one stands in an exchange relationship that are rated as being eminently important and that are highly valuated. These are one's cross kin in general and one's *meinheil* in particular, and also one's *pinandil*. Each relationship in its own context is founded on the principle of exchange, a principle which in itself holds the key to social and cultural existence. *Meinheil* "give" their sisters to one another in marriage, thus mutually securing procreation and the continuation of substance; *pinandil* make men of each other, culturally fully valid beings, through the mutual provision of highly valued nurture. The act of mutually granting each other the foundations of existence constitutes the basis of the notion of equality. Reciprocal exchanges create a relationship of equality between the transactors. In an ongoing exchange relationship absolute parity is rarely achieved since, through the mechanism of delayed reciprocity, at any given time one party holds the position of debtor while the other ranks as creditor, especially in the context of the ritual system. But through the ongoing nature of the relationship and the fact that the roles are regularly inverted, the imbalance is evened out and, in the long run, the balance is achieved. A man's primary allegiance is to those men with whom he stands in an active exchange relationship. Those people whom social ideology sees one naturally aligned to, one's siblings and other agnates, with whom one shares substance, turn out in practice to be highly unreliable and prone to jealousy. They are not to be trusted. It is noteworthy that to attain the quality of relationship which the ideology implies (unity, trust, togetherness)

men are forced to make a detour via the way of exchange and revert to the means of code supplementation: siblings create relationships of equality by entering into *pinandil* relationships with each other, whilst *meinheil* redefine their relationship by supplementing the code of exchange with that of sharing and addressing each other and interacting as "brothers".

THE ASCENDANCY OF BIGMEN

"When you stop giving each other things, you soon drift apart" (Ploeg 1969:24). What the Bokondini Dani say of their social relationships goes for the Wam as well. It is the exchange relations, which become manifest and effective in the form of events that constitute the anchors which social agents go from and proceed to in the ongoing social process and in an otherwise stormy sea of contentious and unpredictable relations. The necessary degree of social cohesion is attained through the multiple interlinking of existing exchange relationships. Through the intricate web of relationships which exchange events and their subsidiary systems of pooling and distribution produce, ties between otherwise separate segments of the social order are established and channels of communication kept open. The density of the network by no means precluded the occurrence of conflict, physical violence, and even bloodshed in the past but it made their containment easier and made mediation through third parties with which each conflict group had meaningful and effective cross ties or ritual links, more feasible. It is significant for the meaning which the act of exchange carried that in the earlier days of kastom all forms of serious conflict which involved physical confrontations and bloodshed were finally resolved through an act of *reciprocal* exchange. The act conveyed the antagonists' willingness and consent to accept each other as equals, which was symbolically expressed in the mutual provision of sustenance. The act brought back the disrupted social order into line with the moral order which foresaw that men who provided each other with food did not fight each other. As Sahlins (1974:186) notes in one of his aphorisms: "If friends make gifts, gifts make friends."

Acts of exchange are not only the means through which relations of equality and equity are established and sustained, exchange is also the mechanism through which an actor attains and underpins his claim to autonomy. Against the background of the weakness of the lineages as corporate groups and the absence of any form of superordinate authority, and on the basis of the pervasive cultural ethos of male competition, actors are forced to build up their own networks of relatedness through initiating exchange relationships and building up reliable support groups to back them up in the process. Taking into consideration the logic of the situation an individual finds himself in – such as the pattern of relationships he grows into, which were established by his predecessors – it is up to him how he shapes his network, with whom he enters into cooperation, where he draws support from, with whom he risks a confrontation, whether he expands his web of relations or whether he is willed to curtail some of the linkages. The means by which he achieves this

are based on the principle of give and take. Some of the relationships he enters will be based on formal transactions the majority will be of the informal kind.

The actor himself holds the responsibility for the failure or the success of his ventures. Exchanges, notably in the all-important ritual sphere where men are out to prove their maleness, are effected, perceived, recorded and spoken of as transactions between individuals. Although an actor partially relies on the support of others, accountability falls on the individual in whose name the exchange takes place. The success of the event depends heavily on his abilities as a gardener and hunter but to a high degree also on the way he organizes and prepares the event and, notably, on the way he performs during the event itself. His performance in public not only reflects his personal abilities and potentials, it creates his image as a man of renown. The harvest he reaps from a ritual exchange event comes in the form of status and prestige. In material form, prestige becomes manifest in a variety of tokens he displays and keeps in his possession, such as the *mahate wangul*, the *sinime wangul*, or the *wate*[4]. They give account of a man's performance on the occasion of past events and express his potentialities as a reputed exchanger.

What is remarkable about exchange as a central principle of the social system is that it is ambiguous, in the sense that it serves two ends simultaneously, ends which appear to stand in contradiction. On the one hand, exchange produces equality between the transactors and, in its capacity to draw actors together and promote interaction, functions as a mechanism of cohesion in society; on the other hand it contains a very competitive moment and constitutes the means through which social actors satisfy their claims to autonomy. This apparent contradiction introduces a very dynamic moment into the social system. Equality is not a state of being which is freely granted and which, once reached, is sustained ever after. It is an ongoing process of retaining a balance between domination and subjection, between superiority and inferiority. Moreover, the only effective method of avoiding subordination is to strive for ascendancy, which means holding a position where one is able to produce more, to give more, and to perform better than others. The logic behind the system is the conviction that the others are following the same course and are striving for the same aim. Transcending this ongoing and fierce competition might well be a longed-for goal but in the context of male relationships this goal is rarely reached and there are only precious few relationships which are completely free of contention. Where this is the case, they represent havens of acceptance, trust and security in an otherwise antagonistic and challenging social universe. It is notable that relationships are more likely to be positively valued where men openly enter into exchange relationships with each other, such as in marriage, or in death payments, where cross kin are recompensed for performing certain tasks in burial procedures and are later reciprocated. In the ritual sphere, when *pinandil* exchange with each other it is an open form of competition, where, albeit in an atmosphere of ritualized aggression, men compete *with* each other. In contrast, siblings for instance, under the ideological cloak of sibling unity, do not exchange with each other, instead, positioned on the same side of the exchange, they compete *against* each other and contend *for* the same valuable but scarce resources and positions in the social order. Open

competition, it seems, fosters equality and integration; submerged competition promotes antagonism.

Exchange not only operates as a central principle of the social system, exchange also takes on the guise of a very subtle but powerful form of language (cf.Gewertz 1984:193). It is through the means of exchange that actors make statements about their relationships and express their opinion of each other. Like other forms of communicative competence, all persons have a command of the language of exchange. However, some of them are better versed in it than others, while some are complete masters of it. The basic syntactical rule of the language of transaction is that reciprocal exchange creates and expresses a relationship of equality. The language of exchange, however, allows the speaker to say much more than simply "we are equal". Through exchange an actor is also able to express dissatisfaction, contempt, frustration, anger, friendship, concern, compassion and many other forms of sentiment. Exchange harbours nearly as many modes and devices of communicating evaluations of a situation and expressing opinions on the state of a relationship as does spoken language.

Basically one could say that there are five possibilities of handling an exchange. Firstly, there is balanced exchange, where an actor gives back, in kind or in value, what he previously received; secondly, an agent gives back more than he originally received, either in quantity or quality; thirdly, he can return less, again either in form of quantity or quality; fourthly, he can refuse to make a prestation, that is, he gives nothing at all; and fifthly, he can renounce a prestation someone makes to him. Further, one could say that the act of giving is valuated higher than the act of receiving and that the act of refusal in any form carries a negative message. However, it is not possible to make statements about the specific meaning of each rhetorical form, since meanings differ from occasion to occasion. The interpretation of the message very much depends on, and varies with, the given circumstances of the event, the actors involved and the history of their relationship.

The accumulation of prestige and status is intricately linked to the act of giving. An actor who makes large prestations and distributes food generously is indicating his potentialities as a man of renown. At the same time, placing others in the position of debtors is a highly effective way of exerting power. He holds a leverage over his debtors, which means they are compelled to react and, in some way or another, are forced to comply with the intentions of the donor. As long as he is the creditor, at least in theory, he is in a position where he is able to dictate the terms of the relationship. Following the ground rule, if a debtor fails to make an equal prestation or makes no return payment at all, he is losing out on his opponent and will be compelled to concede his inferior status. It is on this rationale that much of male competition and the quest for status and prestige functions. However, as in the realm of spoken language where irony, for instance, can imply the absolute opposite of what is explicitly being stated, the rules of the language of exchange are often inverted, and the negation of exchange too becomes a viable means of exerting and expressing power. If an actor intentionally makes an inferior return prestation (either in quantity or quality) it is highly probable that he is doing it with the clear aim of expressing his dissatisfaction with some aspect of the relationship. Here, the man is not

conceding his own inferiority; instead, in an indirect way which is well understood all the same, he is questioning the worthiness of his exchange opposite. An even stronger form is the refusal to make any prestation at all. This is to be understood as a denial of equal status. Like excessive giving, refusing to make, or return, a gift can be a form of exerting power. The act then is a clear affront to the frustrated receiver and compels him to take action in some form or another, lest it be read in public opinion that he is incapable of effecting compliance from his opposite, or, in other words, that he shows himself to be inferior to his opponent. The insulted person has no way of directly coercing his opposite into meeting his obligations, nor can he seek redress from any higher authority because there is no such institution. The actor is thrown back on his own personal abilities and resources. One way of trying to get the other to comply is to mobilize public opinion against the wrongdoer; or he might revert to the use of shaming or ridiculing the malefactor in public; the ultimate means, however, is the threat or application of sorcery. If the transgressor succumbs to any of these attempts or threats he loses face; if he withstands them it is likely that his status will even be enhanced since he will have proved himself to be steadfast and strong. However, such a demonstration of power is a risky business, not only because the actor is exposing himself to the danger of sorcery, but also because public opinion is a very volatile and unpredictable variable. He must be very careful not to overstep the mark and not to blatantly flout the moral order, otherwise public sentiment could turn against him. Where the boundary of tolerance and transgression of the moral order runs is not predictable. It shifts according to the circumstances of the occasion and the actors involved in the setting, and sounding out this boundary is a very delicate and complex venture. Waging such a confrontation always contains two aspects, firstly, the actual contest with one's opponent, and secondly, the actors at the same time being forced to "play" for the public and having to try to gain its support for their cause. The successful manipulation of public opinion and securing the moral justification for one's course of action are two of the main features of bigmanship.

This kind of power play is part and parcel of every actor's social existence. It constitutes the other side of the fact that all social relations are subject to negotiation. However, it is important to take note of the fact that this contentious form of negotiation does not pertain so much to a man's immediate partners in exchange but very much more to those agents who stand with him on the "same side" of the exchange, i.e. it involves people whom he relies on for contributions in making a prestation and whom he is obliged to recompense in distribution after having received a prestation. In the secular sphere this refers to one's agnates in general and siblings in particular, in the ritual domain it involves the men of one's own moiety in one's own ward but notably also those of other wards and neighbouring villages, with whom one has ritual links. Here it can include both parallel and cross kin, since the ritual system operates on the paradigm of the "brotherhood of men", which means that all the men from one's own moiety rank as siblings irrespective of their kin status otherwise. Unlike many other societies in Melanesia where exchange welds those men who together make prestations into a unified group (cf. Sillitoe 1979:293), the process among the Wam is the other way round. Here it is the exchange partners

themselves who share a bond of unity, whilst rivalry and contention are primarily features of the subsidiary networks. It is on the parallel side of relations that the aspect of hierarchy emerges and becomes a dominant feature. It is agnates, especially siblings, and members of the "same spear" who battle for primacy with each other within their own half and, in the process, revert to all forms of usage which the language of exchange offers. Attaining high status implies creating relations of dependency and exerting power over those members of society with whom one does not conduct direct exchanges but on whom one is reliant for making these transactions. The size and quality of a formal prestation a man makes becomes a measure of the power he is able to exert over the men of his "side" and the degree to which he is able to motivate them into supporting him, whereby motivation includes both positive incentives and more forceful forms of encouragement. Amongst other things, formal exchange indicates what position in the hierarchy the actor holds.

This ongoing struggle for equality is a pervasive feature of the entire social process. All actors are drawn into it, both men and women, but separately and in different fields and along different lines. In order to hold his own, a man must strive for ascendancy; simply trying to remain even means falling back in the race. He must mark his presence and assert himself, and make it clear to his fellow men that he will not let himself be pushed around. Those who fail are pushed to the side and marginalized. They are not shunned or ostracized in any way, they are just not taken seriously. Their voices are not heard and their opinions not valued. The large majority of men fare about equal in this competition. They follow a more or less average "social career"; they are initiated, they marry, they produce offspring and they become household-heads. On the whole, they are able to hold the balance between autonomy and dependency. Some of them might even attain distinction in a specialist field such as healing, the manufacture of tamberan decorations, or tool making, but overall the range and degree of influence they exert remains restricted.

Then there are a few actors who stand out from the large majority, attain prominence and are accredited with the status of being "more equal" than others. These are the bigmen[5]. These are men who on the strength of individual abilities and features of their personality take precedence in affairs which concern the wider polity in both ritual and secular terms. They are those men who, in effect, rank as leaders and whose actions and decisions tend to have farther reaching consequences for the social universe than the doings of others. Significantly, there is no generic term for this type of leader in the Wam language. The only common term is *telhineme*, which denotes the status of a fully adult, married, and initiated man. It is used to designate all men who have reached this point in their lifecycle but it does not give account of a person's position in the male ranking order. At times one hears the term *sambe paineme*, which literally means "big man", but I believe this more to be a back-translation of the Tok Pisin term bikman. The absence of a term denoting social pre-eminence is conspicuous and reflects the basic ethos of equality in its ambiguous nature. It is recognized and, in practice, even accepted that some men are more prominent than others but it is not overtly encoded and expressed.

The foundation of bigmanship is personal power. Bigmen do not attain authority through ascription; they acquire influence through achievement. Skills as a grower of yam

and as a hunter are necessary prerequisites but command over the properties of the natural environment is not sufficient for attaining bigman status. Thus, Mahaite Ningaha, for instance, was rated as one of the best hunters and gardeners but he did not rank as a bigman. It requires having command over the social environment, exerting influence over other men and motivating them into a mode of action which is conducive to one's own aims and interests.

Imposing physique, bravery, knowledge, oratorical skills, humour and wit, intelligence, organizational talents are often described as being the features characteristic of bigmen. No doubt this is true to a large extent, but bigmen do not have to be the best in all the separate fields. More to the point, they have to display the ability to combine all forms of authoritative resources at the right time and in the right context, and be able to exploit them optimally and transform their potentialities into action. Above all, bigmen are masters of rhetoric, both in terms of the spoken language and in terms of the language of exchange. They are the grand performers in public but they also know when to hold back and show restraint, they know when lenience is more appropriate than severity, when self-assertion is more productive than diplomacy. They know when it is opportune to let others briefly take the lead, but they know equally well when the time has come to manoeuvre themselves back into focus.

In the context of ritual exchange, bigmen did not gain prestige by demonstrating their power in vanquishing and humiliating their kawas, thus proving their superior status. Such behaviour would have been judged as a transgression of the moral of equality and, thus, counterproductive. The hallmark of the bigman here was his capacity to take on two or three or even more kawas at the same time and still hold his own. All the renowned bigmen of the past were remembered as having several *pinandil*. Some of them are said to have had up to six kawas. The last bigman in the traditional sense of the term today, the village magistrate called Hiale, still has three kawas. In order to be in a position to ritually compete with a large number of *pinandil*, a bigman had to be able to rely on a wide range of supporters over whom he held substantial influence. The means by which he effected this were again based on the principle of reciprocal exchange. It meant building up links of dependency to a range of actors which transcended the limits of his own ward and reached as far as villages of neighbouring groups.

Bigmen had to build up and sustain intricate networks of credit. This could be done in a variety of ways: by participating, for instance, as *numbwandil* in the ritual process of other wards, by helping others in making prestations and meeting their obligations in both the ritual and secular spheres, by granting others usufructory rights to land or other resources, or by supporting others in times of need, such as taking sides for them in conflict situations or granting them protection from threats of sorcery. When the time came that he himself needed backing he would be able to draw on the support of his network of debtors. The prerequisite of such a position was that the man had sufficient allocative resources at his disposal, or at least had access to such, and had the necessary personnel to exploit these resources. This implied that he had to have command over a substantial number of women whom he could rely on for garden work and other economic chores, especially raising the

pigs he needed for exchange, and for providing him with sons and daughters. Marriage was one of the main channels for securing this kind of sound operational base. Almost invariably, bigmen were polygynists. They had either two or more wives, and they showed the propensity to accumulate wives in step with the accumulation of status and the extension of their range of influence. Wives were not only valued for their productive and reproductive capacities, they also provided the key to building up significant ties of affinity. The larger the group of supporters, and the larger the number of those he could mobilize, the bigger the ventures he could engage in. These bigman support groups were what one could term factions (Sahlins 1966: 166). They constituted not clearly delineated and nonpermanent groups which were focused on a pivotal figure at the centre. A faction actually only emerged on the strength of the existence of the bigman. Its members were recruited on diverse principles and, apart from their allegiance to the bigman, they did not necessarily form a unified entity. Very often such factions, temporarily and for particular purposes, united individuals who were otherwise opposed, or at least felt uncommitted, to each other and it was entirely a question of the bigman's power to bring them together and ensure cooperation. Basically, such a bigman faction displayed a concentric order consisting of a small core of loyal and close supporters – people recruited from his immediate kindred and ritual segment and on the basis of genuine sentiment and friendship – followed by ever-wider circles of allegiance. The further one moved away from the core and approached the periphery, the more diluted the attachment and commitment to the bigman became[6].

Unlike others, bigmen did not merely participate in the events of the ritual cycle; they actually instantiated them. The enactment of initiations and the various sequels they engendered largely depended on the initiative and input of bigmen. Initiations and their appendage were not self-generating. They were planned events which required a tremendous amount of organization, coordination and direction. Even if the number of actual initiates was comparatively small, the events as such easily involved hundreds of people from all over the area. Preparations for an initiation or a *pinandil* feast began well before the actual event took place. Apart from motivating and mobilizing all the participants who, in some form or another, would later contribute to the event, and which often included groups of people from other wards and villages where his degree of influence and, thus, his leverage was probably more restricted, the bigman in charge had to coordinate the necessary productive processes and all the other preparatory steps in such a way that all efforts would converge and climax on the specific day chosen for the feast. While for the average actor success in an exchange feast was measured by how he fared in the ritual food competition and whether or not he was able to surpass his kawas, success for the bigman, apart from his own transactions, was contingent on the outcome of the event as a whole for which he carried responsibility and which, although not explicitly stated, was staged in his name. The criteria of success and failure were many. They included the sum of actual participants, i.e. ritual transactors, and the number of visitors the event was able to draw, especially those from more distant places and villages. They were an indicator of the principal actor's renown and of how far his repute carried. Other criteria

were the quantity and quality of foodstuffs presented, especially the number of pigs exchanged and the splendidness of the long yam on display. Other important criteria were the quality of the decorations and adornment, the performances in trumpet playing and dancing, as well as the skilfulness and wit of the oratory performances. All these issues reflected back onto the bigman principally in charge of the event. If they were judged favourably and the event went onto the record as a successful feast it contributed to the enhancement of the man's prestige and renown. A botched feast, on the other hand, could result in a serious setback for him, even if the forces responsible for the failure were beyond his control (bad weather, a drought, an unexpected death shortly before the event, etc.). In such a case it would require all his rhetorical skills and his power of conviction to stave off the blame and construct an accountable version of what had gone wrong and who was to blame.

As I noted at the beginning of this part of the study, a social system is, according to Giddens, a system of interaction. It involves situated activities of human beings and exists syntagmatically in the flow of time. It involves regularized relations of interdependence between individuals and social groupings. The ongoing process is structured into a myriad of single events which combine to produce a flow. These can be understood as moments when action is instantiated. They are occasions where social agents make contemplated causal interventions in the social process by applying the rules and resources they are equipped with, and by relying on basic codes of interaction which constitute parts of the agents' mutual stocks of knowledge and which emerge as recurrent social practices. All social actors are engaged in this process and, as I tried to show in a previous chapter, all relevant social groupings, ego-focused networks of relatedness, are formed around such events, particularly pivotal events of formal exchange. The effective social order emerges as a property of the interaction of its agents.

Negotiation constitutes a vital element in all forms of interaction and in the process of social formation, and in the course of it all social actors revert to the use of power, which involves their ability to produce outcomes where the realization of these outcomes depends on the agency of others. Power refers to the transformative capacity by which social agents are able to take influence on the course of events in the world. The difference between the average actor and the bigman is not a distinction in kind, but one of scale. In action, both men rely on the same kind of rules and resources and they are engaged in principally the same social practices. But bigmen think and act in a different dimension and operate on a different level of complexity. They are engaged in considerably more and larger formal transactions and therefore also need to rely on more extended networks of supporters than the average man. Furthermore, whilst in the ritual context average men were primarily concerned with organizing and staging their own immediate prestations, bigmen, in addition to their own personal transactions, took over the responsibility, and thus also the credit, for establishing the forum and preparing the ground within which these culturally significant issues were dealt with. Considering the meaning the ritual system had for the whole socio-cultural design, bigmen held key positions. Whilst men in general were accredited with holding control over the tamberan, the bigmen stood on a level once

removed, in a position where they were in control of those who claimed to be in control of the secrets of fertility, growth and male strength. Nothing moved without the bigmen. They decided on when and where an initiation was to be staged and who was eligible for initiation; they supervised all the necessary preparatory steps; they determined the length of seclusion, and they also dictated the schedule and the terms on which all the subsequent ritual events and repayments were carried out. They had no superordinate authority which allowed them to take decisions over the heads of others. Other individuals were also involved in these decision-making processes and contributed to their outcome. All collective action was founded, ostensibly at least, on the basis of consensus. It was precisely in this intermediate and open phase between intention and action where bigmen brought their power to bear on the setting most and tried to achieve compliancy with their aims whilst, at the same time, creating and sustaining the appearance of consensus.

This kind of appearance of consensus upheld, frontstage, the ethos of equality while, backstage, the creation of hierarchy, the establishment of a clear ranking order, was prevalent. It reflects the ambiguity of social-political relations well. The Wam fully aknowledged that some individuals were more equal and held ascendancy over others and under certain conditions and in specific contexts they were prepared to grant these individuals a larger amount of influence. They realized that ultimately they were reliant on their bigmen. Through their leading roles in the ritual system bigmen carried the responsibility for maintaining the dominance of men over women, and they were vital in holding control over the forces of the natural environment, embodied in the spirit of the tamberan. Also, they provided protection against any attempts by neighbouring groups to encroach on their territory. Strong wards or villages were those that had big bigmen. They were those wards that were capable of staging magnificent feasts where numerous pigs were exchanged and killed, where the long yam on display were unrivalled in size and beauty, and where the *wangul* were full to bursting with yam. The size and splendour of ritual events were a testimony to the potentialities of the bigman in charge of the show but they also reflected back onto the other participants.

The bigmen and their followers lived in a symbiotic relationship. The former were reliant on the cooperation and support of the latter to attain the position they held, while the latter were able to draw from the prestige and renown which the former generated. The bigger the bigman, the higher the standing of his followers was the maxim but the arrangement, of course, had its pitfalls and drawbacks. The main difficulty referred to finding a solution between the element of hierarchy, which the system evidentially contained, and the general societal ethos of equality. A bigman was expected to show initiative and take the lead in collective ventures. Failure to do so invariably led to a diminishment of status and a loss of support. On the other hand, he had no ascribed authority which he could fall back on in the process and any attempts to dominate his nominal peers was bound to elicit opposition. In order to achieve his aims and retain his standing he was forced to set out on a tightrope walk, exerting influence and getting others to comply with his aims but avoiding overt coercion in the process. It required a refined interplay between providing positive incentives, applying pressure when necessary, and

cleverly manipulating social and political configurations. Apart from this kind of political engineering in the background, a lot depended on how a bigman could perform in public settings, before a large gathering of people and under the scrutiny of envious contenders. The outcome of such an event as a *pinandil* feast not only depended on how meticulously it had been planned and prepared by a bigman and his supporters but, to a large extent, also on how he stage-managed the event itself and how effective he was in rendering presentations of self in the process and underpinning his image as a bigman. A successful feast provided the legitimation of his high status while simultaneously it constituted the means of its production. Through their performance in public, bigmen set the standards which they were to be measured by. Their acts of self-assertion, displays of "mitasolism" in public, were challenges to potential competitors to either accept their ascendancy or, if not, to do better.

Very often bigmen were demanded to perform balancing acts between acceptability and transgression of the moral order. Exceptional achievements were expected of them but, at the same time, the people had their reservations and always retained a certain degree of suspicion towards their bigmen, lest they become too powerful and domineering. Bigmen were able to hold their positions and could count on the backing of their followers as long as a reflux of benefits was sustained. As long as each individual follower had the feeling that what he was investing in the bigman and what he was granting him thereby – power – tallied with what he was getting back, the bigman could rely on his allegiance. However, not only did bigmen have to excel and perform better of their own accord, their positions were continuously being contested. Invariably there was a row of other, equally ambitious, men waiting for him to make a slip and to take advantage of his momentary weakness.

The political order was an open system. The means and mechanisms by which prestige, status and influence were attained were basically the same for all (male) actors in society. In this sense we can speak of equality of opportunity. The men did not compete for a restricted set of pregiven titles nor did they struggle for succession to limited and prescribed positions of office. In theory, there were as many status positions open as there were individuals to fill them. In practice, however, there were never more than one or two men in each ward who ranked as bigmen. Very often one bigman had control over a large faction which included men from several different wards. In the 1950s and 1960s, a man called Kokomo Ulia from the Urat-Wam village of Eimul ranked as the prime bigman of practically the whole Dreikikir area. His influence reached from the Gawanga villages in the south-west to the Wam in the north-east. It was based on his position in both the traditional ritual system as well as his role in bisnis (business) innovation and, later, in parliamentary politics (cf. also Allen 1976: 340). In the postwar years a man called Landihi ranked as the man of greatest influence in Talkeneme, whilst his counterpart in Wohimbil and Warengeme wards was a man called Happali. Below them ranked other men of influence who did not quite equal their factional leaders but were rated as men of prominence all the same, and below these were again others of lesser power but nevertheless striving for higher status and increased influence. These latter often functioned as seconds to the principal leaders and rode in the wake of their influence.

The reason why this political order was an open one was partly due to the fact that the power involved in this field was personal power, and that the career of a bigman was closely linked to his life cycle. Just as bigmen came into power in the course of adulthood, their power waned in old age. A bigman's power was at its peak when his children, at least those of his first marriage, were practically grown up, when he had accumulated a considerable degree of knowledge and experience in both ritual and secular terms but before his physical energy failed him and hindered him in staging grand performances of self-presentation during feasts or on other occasions of significance. Aged bigmen were treated with respect, were held in esteem for their past deeds, and were appreciated for their wisdom and wide experience but they exerted little influence. As long as a bigman was able to perform and achieve he was able to retain, or even enhance, his position; when his power began to wane others would come forth and push him to the side.

Competition did not necessarily only come from the other bigmen in the vicinity. Although there was a lot of rivalry between the bigmen of the same area – a pattern which finds its confirmation in present-day power relations – bitter competition often also came from within a bigman's own faction, from other ambitious men who were striving for ascendancy and trying to wrest power from their faction leader in order to take his place. Bigman factions were highly volatile and fragile entities. As in siblingship, overt cooperation and allegiance often masked latent contention and antagonism, and beneath the surface of unity factions tended to split into competing subfactions, each one headed by an ambitious man on the quest for status and attempting to topple those who stood in his path to ascendancy. The real test for a bigman came with the task of retaining control over his faction and bringing his supporters to comply with his own aims. The bigger his faction, the greater his range of influence, and the higher his renown, the higher the propensity that allegiance towards him would start to crumble and resentment towards his overbearing position would grow. The bigman system displayed a highly inflationary moment which, at the same time, contained the key to self-regulation. In order to hold their positions of pre-eminence in the face of ongoing competition, bigmen were compelled to extend their range of operations and, therefore, also expand their factional networks on which they relied for support in their ventures. Simply retaining the status quo usually meant a step backwards. They became enmeshed in ever-widening networks and increasingly complex processes which entailed that they expose themselves to the ever-growing susceptibility of becoming involved in serious conflicts and meeting with harsh opposition both within and outside their factions. Moreover, the biographies of Warengeme bigmen – both past and present – disclose that sooner or later they invariably reached a point in their career where their power exceeded the limits of tolerability, or in other words, they became too powerful. The status positions they held were no longer compatible with the ethos of equality, and even eloquent attempts at creating the appearance of consensus were no longer viable to conceal the fact that equality had ceded to hierarchy.

A bigman who transcended this invisible boundary was invariably cut down to size again and brought back to a level which was more compatible with the general ethos of society. His faction began to crumble and his followers deserted him and aligned

themselves with another man of influence, often a rival of his from his own faction. Such a process did not set in unpremeditatedly. It was usually triggered off by an assailment on the person in question which was encoded in the idiom of sorcery. The targeted man was subjected to attacks or threats of sorcery, which were communicated in the form of intimations or rumours or, more directly, in the shape of unmistakable signs which were transmitted to him with the intention of intimidating him and his immediate entourage and, possibly, eventually forcing him to shift residence and seek refuge in another village. A subsequent illness or the death of a close relative such as a wife or child were retrospectively interpreted as evidence of the stringency of the impending threat. Thus, for instance, in the later years of his life, Landihi, one of the bigmen of Talkeneme, suffered from cancer of the lip, which not only led to an ugly facial disfigurement but also seriously impeded him in speech. The affliction was interpreted as an attack of sorcery which had been devised and carried out by some other men of Talkeneme with the intention of incapacitating and silencing him. Without being able to make his voice heard in public, Landihi's people maintained, he could no longer act and perform as was expected of a bigman, and thus inevitably his influence and standing diminished and he was forced to retire from the political stage.

A distinctly more common and usually more effective way of destabilizing a bigman was by making him the target of sorcery accusations and depicting him as a ruthless and insidious homicide. Such accusations were rarely raised directly and openly, at least not during the incipient phase. Rather, they proliferated in the form of rumours. Veiled in a cloak of suspicions, hints, and intimations they were more effective and more damaging to the bigman's standing since they were difficult to bring back under control and refute. Such rumours spread fear and anxiety among the people. They had the primary aim of creating a negative image of the targeted bigman and thereby undermining the legitimacy of his role as a leader. They showed him as being not the generous provider of sustenance and protection, which was the image that usually he tried to convey of himself, but a wicked powermonger who was prepared to eliminate anyone who dared to challenge his supremacy. He did not necessarily have to perform the sorcery himself, it was sufficient that he acted as the client and contracted others to do the actual killing for him. This in fact is the pattern encountered most frequently.

The idea behind this strategy was to discredit the bigman and ultimately isolate him by making his followers turn their backs on him. A bigman without a strong faction to back his cause was doomed to insignificance. The demise of a leader did not create a vacuum in the political order since his position would immediately be filled by another man of power, usually one of the rivals responsible for ousting the original leader. The new leader's career would, in turn, follow approximately the same course as that of his predecessor and it was only a matter of time before he suffered the same fate. Exposure to sorcery in one form or another was a burden all leaders had to come to terms with. It represented the other side of commanding influence and having prestige. Every bigman suffered such rebuffs in the course of his political life. They did not necessarily spell the end of his career but were only a temporary setback which, however, was reversible. It meant that he had to set about

rebuilding his wider network and regaining the confidence and support of his following. If he knew how to play by the rules of the game he would soon be back to where he had been before.

Sorcery is a dominant theme in Wam society. Like exchange, one could describe it as a kind of key practice, since it is so central to the working order of the socio-political system. In many ways sorcery is the antithesis of exchange. In principle, the two practices exclude each other. Whilst exchange is closely associated with the notion of nurturance and, therefore, with ideas about growth and strength, sorcerers occupy themselves with the reverse process: they spread sickness and death. Freshly-initiated men, who have been sustained during seclusion by their *pinandil*, make their grand appearance in public in splendid array, well nourished, and with a beautiful shiny skin. Sorcerers, on the other hand, are depicted as emaciated and dirty figures who shy away from the public eye and live on the periphery of society. Instead of being fed with fine foodstuffs like pig and yam, they ingest repugnant and vile substances during their initiation to sorcery. Whereas exchange creates valued bonds of relatedness, brings men together and unites people through marriage and ritual ties, sorcery disrupts unity. It fosters suspicion and fear, and engenders dissension and conflict. Moreover, acts of exchange provide men with the means of establishing and expressing relations of equality. *Meinheil* exchange sisters in marriage, thus providing one another with the foundation of progeny. *Pinandil* "make men" of each other by taking over from mothers and sisters the task of nurturing. Although the rapport within these relationship categories, too, are seldom completely free of strain, kawas and affines would never conceive of reverting to the use of sorcery to settle their problems. Once again, the rare exceptions confirm the rule. Sorcery is closely associated with the issue of inequality. Men apply sorcery as a means to control and dominate others. The relationship category most susceptible to sorcery is siblingship, where the notion of hierarchy is inherent due to the distinction made between younger and elder siblings. Instead of having cooperation and loyalty, as the ideology of siblingship sees it, jealousy and suspicion reign. Elder siblings are expected to lead and to protect the interests of their younger brothers but experience shows that this is rarely the case. Instead, the notion goes, they try to exploit their seniority and subjugate the others. They try to take their women and steal their land, and one way of effecting this is by the use of sorcery. On a wider societal scale, bigmen are often accused of displaying the same pattern of conduct. They are inclined to misuse the power which their fellow men have ceded to them. Instead of applying it to the benefit of all, they exploit it for their own selfish purposes.

However, both exchange and sorcery are multifaceted practices and, at times, they are liable to be employed in a manner which runs counter to their basic orientation. Thus, exchange can be manipulated and used as a very subtle tool for creating and expressing status differentiation, based on the rationale that givers rank higher than takers. It is a strategy which all actors revert to, but notably the bigmen excel in. When bigmen exceed their limits and rise above their fellow men they are brought down again by threats or accusations of sorcery. Sorcery, thus, also has a levelling function. It fulfils its role as a means of social control in a dual sense. Bigmen are perceived as applying it in order to

control others, whilst society turns to it to harness those members who threaten to monopolize control and convert it to domination. In the coming final chapter of the first part of the study I deal with the beliefs and practices pertaining to sorcery in more detail.

At present, the Wam are going through a phase of radical modernization and transformation. Key elements of the traditional socio-cultural design are being discarded and replaced by novel concepts and forms of social, economic, and religious organization. However, under the surface of modernity the old themes centring round equality, hierarchy and power persist and, above all, sorcery is still a crucial issue. Of the traits of kastom, sorcery is proving to be the most resilient of them all.

NOTES:

[1] The most detailed description and analysis of the tamberan in the immediate area is Donald Tuzin's (1980) study among the Ilahita Arapesh. For other descriptions amongst neighbouring peoples cf. Gesch (1985) and Roscoe (1990) for the Boikin, Mead (1938, 1940) for the Mountain Arapesh, Obrist (1992) for the Gawanga, Hauser-Schäublin (1989) and Forge (1967) for the Abelam.

[2] In this context it might be of relevance that both bananas and cassowaries rank as female symbols. One of the few, but important, myths recounts how the female cultural hero called Yelebiel was originally a cassowary. After being tricked by a Wam man and losing her feather coat she came to dwell among the Wam as a woman and in due course came to introduce them to sexuality and to the art of cooking (cf. chapter 16)

[3] The following account is based on descriptions received of the last *nau* tamberan which was staged in Talkeneme ward around 1960. Officially the cycle is not yet concluded since only a few of the return payments have been made to the surrounding wards and villages, also the *serengel pinandil* feast is still outstanding. Whether it will ever be concluded now is an open question.

[4] These are tamberan insignia. The *mahate wangul* is the cane ring which indicates the circumference of the yam heap presented during an exchange feast, the *sinime wangul* is a bamboo stick marking the height of the heap, and the *wate* are smaller cane rings indicating the circumference of single large yam presented to a kawas.

[5] To the best of my knowledgde, it was Marshall Sahlins who coined the term bigman as a distinct type of political leadership, although many others had used the term prior to him to describe political leaders in Melanesian communities (cf. Sahlins 1966). In the meantime, a vast body of literature has developed on the subject. For some of the more recent findings cf. Godelier and Strathern (1991).

[6] I deal with the issues of factions and factionalism in the modern context in more detail in part two (cf. chapters 14 and 21).

CHAPTER EIGHT
ON SORCERY

Sorcery, or "magical practices directed towards the production of disease and death" (Seligman 1910:281), is a phenomenon frequently encountered in Melanesian societies. Although one does find societies that practice witchcraft, sorcery appears to be very much more common (Patterson 1974/75; Glick 1973; Stephen 1987)[1]. Among the Wam we are dealing exclusively with sorcery. Sorcerers are always men. However, women, and especially wives, can play an important part inasmuch as it is believed that they are likely to channel personal leavings of their husbands to sorcerers or, for the same purpose, add sorcery ingredients to their men's food and drink. Although the varieties of sorcery are multitudinous, they roughly fall into two categories best defined by their Tok Pisin terms poisin, and sanguma[2] or assault sorcery.

Not all cultures in Melanesia revert to sorcery beliefs to explain death and misfortune, but in the societies of the Toricelli foothills sorcery forms a dominant cultural complex (cf. Martin 1952; Schofield and Parkinson 1963; Gerstner 1963; Forge 1970; Daimoi 1976; Brison 1988, 1989; Leavitt 1988, Obrist 1992). In the wider Maprik-Dreikikir area, the Wam have a reputation as powerful sorcerers. The first time I heard of the Wam was when I was staying in the Gawanga area, and that was in the context of sorcery. Like other groups such as the Bumbita (Leavitt 1988:2), the Wam pride themselves as being the inventors of sorcery per se. In the same breath, however, they stress that today others have surpassed them and that sorcery is no longer "legitimately" learnt and practised. In the Wam area itself, the villages of Warengeme, Selni and Hambini have the reputation of being sanguma centres (Schofield and Parkinson 1963:2).

Not many days pass without sanguma or poisin being mentioned in some context or another. People often sight sanguma men in the bush or, in the early morning on their way to the gardens they find footprints which they cannot identify and then assign them to prowling sorcerers. Because sanguma men can take on different bodily forms and shapes or make themselves invisible, they represent an omnipresent threat. Dogs, birds or even unexpected sounds like the cracking of a branch may possibly point to the presence of sorcerers. It is not only elderly people or women that share this fear; it affects everybody. Many of the inconsistencies and irregularities in everyday life find their explanation in the activities of sorcerers. It is a theme that underlies life daily, submerged, just below the surface, and it is only when the presence of sanguma is felt, either through the spread of a rumour or through the appearance of a variety of natural or deliberately contrived signs, that the villagers become alert and touchy. Periods of heightened tension are not necessarily triggered by a single death but more likely by a chain of misfortunes or deaths that seem to be connected, and in association with the appearance of signs. In such times, which are however infrequent, people are likely to adjust their everyday schedule. They avoid certain areas and prefer to make detours in the bush along more frequented paths, they remain in their hamlets after dark and leave their kerosene lamps burning through the night, the men take their spears and bows and arrows with them when they go to the gardens, and often the children from more distant hamlets are not sent to school until the threat subsides.

Much of the discourse on sorcery takes place in the shadowland of rumours, suspicions, allusions, threats and accusations. Whether or not sorcery "works" in the way people say it does is an issue that has occupied anthropologists again and again over the years (cf. Leavitt 1988; Bowden 1987). To the best of my knowledge, no outside observer has ever witnessed a (successful) sorcery attack and outsiders are only very rarely shown sorcery paraphernalia. In general, villagers are reluctant to talk about sorcery practices – at least this was the case in Warengeme – lest others might become suspicious about the informant's surprisingly broad knowledge of them.

In intra-group relations, the people say, sorcery was much rarer in earlier days. When it was used, it was very often regarded as a legitimate means of defending one's property or other interests from transgressions by others. It was also an instrument to which the secret male tamberan cult reverted to punish those who were careless or foolhardy enough to disclose the secrets of the tamberan to the uninitiated, or to retaliate against women and young men who dared to catch a glimpse of the secrets of the tamberan. Although sorcery was granted legitimacy in this restricted context, it was never highly valued in itself, nor was it regarded as a prerequisite for becoming, or a hallmark of, a bigman or for attaining influence and status. Established bigmen, on the other hand, were often suspected of having sorcery knowledge and applying sorcery.

I never obtained any factual evidence of sorcery. I never set eyes on any substance or implements that were related to sorcery, but they were described to me and I was constantly assured and warned of the existence and presence of sorcery. Shortly before my arrival in the village in 1984 six men from Warengeme were jailed for six months because of sorcery. Police found evidence in the form of sanguma "spears" and poisin substance in the houses of the suspects and on these grounds they were convicted. The men later told me that what the police had found and confiscated was *mianke*, a magical substance in powder form used for gardening or hunting, and they claimed that the police would have found such evidence in the house of every man in Warengeme.

In the end, however, it is irrelevant whether sorcery produces the effects it is believed to do according to the standards of Western science, i.e. "that magic works". For the villagers, sorcery is an indisputable fact and a reality. It constitutes a paradigm to which the people refer when rationalizing, and which they talk about and act upon in their social environment and their lives. It is undeniable that people of all ages and both sexes die, as everywhere. It is also an established fact, which at times is borne out by witnesses in public, that men try their hand at sorcery in the sense that they go through certain stages of the sanguma initiation, procure substances that are used in sorcery, and also take preparatory measures to perform a sorcery attack. The two fields of evidence are connected and a causal link is created: men indulge in sorcery practices and people *do* die. This is evidence enough to constitute a convincing explanation of death and misfortune. The complex is nourished by the prevalence or frequent appearance of signs or piksa (Tok Pisin for picture, in Wam *malehe*). Some of these piksa are natural phenomena and thus coincidental; others are signs deliberately contrived by humans who are exploiting the people's fear of sorcery and who communicate such signs to co-villagers as threats with the intention of intimidating them or coercing them to act in a specific way.

The Wam know, and have command over, a variety of sorcery methods. One such form is called *erihel* (meaning footprint or track). It is classified as a version of poisin and is used only in a specific context, namely tracking down and identifying thieves. If a thief is careless enough to leave behind traces or some item he has been in contact with, this item is exposed to *erihel*, a substance in powder form, and then buried in a grave. The suspect will fall ill and gradually waste away until he dies or until he confesses his guilt, upon which the person responsible will retrieve the hidden item, but only after compensation has been paid. Today it is only rarely used, since grievances of this kind are preferably taken to the village court. Another form of poisin is called *watuho*, which today is no longer in use and about which I was able to gather very little information.

By far the most feared and dangerous form of sorcery is sanguma, which in Wam is called *arukwineme*. *Arukwi* is a type of black mushroom or fungus found deep in the bush, *arukwineme* are "those of, or those with, *arukwi*". The term is used for both the sorcery type itself and the men who apply it, i.e. the sorcerers. Basically, any man is capable of performing sorcery after he has received the necessary training and gone through sorcery initiation.

Initiation takes place in groups of three or four under the instruction of an experienced sorcerer. The initiates remain in seclusion in the bush for several months, during which time they have to follow strict food taboos and avoid contact with all other persons. Very little is known about what actually happens during seclusion, though the emphasis does not appear to be on the transfer of any special kind of knowledge but more on the consumption and ingestion of different kinds of revolting and vile substances[3].

One of the essential steps during initiation is the collection of body fluids from a decomposing corpse. Using a special bamboo instrument called *wungil*, which is let down into a grave, the sorcerers collect this substance. It is rubbed onto the skin and small portions are also ingested. It lends the sorcerers their capacity to become invisible and perform other superhuman feats. In the last and final stage of the initiation the sorcerers abduct a newborn child – or acquire a foetus – which they then kill and leave to rot in the trunk of a tree. A short time later the decomposing body is mixed with other ingredients and prepared in a special earthen cooking pot. The "meal" is shared out and eaten, the remains the sorcerers smear over their bodies. In everyday use and public discourse this mixture is called *sungule arukwineme*; *sungule* in its normal context is the term for a variety of savoury greens. The process is said to be repeated each time a sorcerer prepares for an attack.[4]

The sorcerer's main instrument is the so-called "spear", *perengele arukwineme*, which is a short, pointed piece of bamboo which contains the pen bilong sanguma (sorcerer's paint), i.e. the *arukwi* substance. There is only a restricted number of such "spears" in the village and, according to various informants, they used to be restricted to specific lineages within a ward. In the old ward of Enniki for instance, it is said that only the *petule* lineage were in possession of sanguma. The *perengele petulemene* was one of the last "spears" to be in circulation before it was confiscated by the police in 1984. Two others were the "spear of Lauwingi" and the "spear of Atumi". The village has lost track of these and nobody knows whether they are still in circulation. "Spears" follow the same paths of

inheritance as do other possessions, i.e. theoretically they are passed on patrilineally but it is just as likely that they are bestowed on another close relative such as a *ningal anheil*. Moreover, "spears" were purchasable through valuables, in modern times through money. The "spear of *petulemene*" for instance, was being held by a man from Wolhete ward at the time it was confiscated, and prior to this it had been in the hands of two other men, neither of them from the *petule* lineage. In addition, and this makes the situation even more uncontrollable, "spears" could be cloned by taking a small portion of the *arukwi* substance and inserting it into a new bamboo with the effect that there were many more "spears" in circulation than the names indicated. While being questioned during a sorcery dispute about the history of such a "spear", one old man explained, using a metaphor, "this woman (i.e. the "spear") went to marry in Mbras (a village in the Bumbita area) and there she had many children."

Thus, although at present there are officially no more spears in circulation – they have either been handed in to the authorities or they have "gone cold", i.e. lost their power – the people are convinced that there are still numerous "spears" in operation. Either the old ones were cloned before the sorcerers handed them in, or else their existence has been kept secret for many years, or new "spears" have been imported from other areas. This suspicion is confirmed by the undeniable fact that people still die and that the circumstances of death always point to sanguma. Furthermore, the death of young children and pregnant women supplies proof that new sorcerers are regularly being initiated.

As mentioned above, in Melanesia one can generally distinguish between two broad categories of sorcery: poisin and sanguma. In the former, either personal leavings of the victim are worked upon, or the sorcerer channels and inserts "poisonous" substances into the victim's body. The latter form refers to assault sorcery where the victim is physically set upon and given a lethal workover, applying both magical and technical means. Among the Wam these two varieties do not necessarily form two separate means of magical killing, although this possibility exists. More often they constitute two consecutive steps in a single process: poisin is administered prior to the actual sanguma attack in order to tear down the victim's defences and weaken him. Poisin in this context is distinguished from the two other forms, *erihel* and *watuho*, and is called *sempeneineme*. It is a black powdery substance which in earlier days was acquired locally. Today, modern materials are said to be used such as battery acid from cars or rat poison, which are then potentiated.

Sempeneineme is administered in minimal portions to the victim in his food or drink, or through tobacco and betelnut. It enters his or her body and over a period of time weakens the victim. Serious illnesses from which people nevertheless recover, are either interpreted as a poisin affliction which was discovered and healed in time, before the sorcerers stepped in for the kill, or else people explain them as sanguma attacks where the killers had not prepared their victim sufficiently well. A clear sign of a *sempeneineme* affliction is abdominal swelling, but there are a variety of other symptoms that are put down to poisin as well[5]. In the end, and what is more important, all serious illnesses are identified in retrospect as attempted poisin. Poisin alone can be lethal, especially if it remains undiscovered for a length of time or is left unattended to, but in the large majority of cases the final cause of death is an attack by sanguma sorcery. No special qualification or

knowledge is necessary to administer *sempeneineme*, even a child could secretly place poisin in a person's food or contaminate a betelnut. This is what makes the situation so uncontrollable and therefore dangerous: one can never be sure from where the threat stems. It also indicates the relevance and importance of social interaction and of the offering of food, tobacco or betelnut. The three items (there are others as well) are not only the media through which social contacts are established and maintained, they also operate as signs of mutual trust and acceptance.

When the time is ripe, that is when the victim is judged sufficiently weakened, the sorcerers – they usually operate in groups of three or four – meet in the bush and prepare a meal of *sungule arukwineme*. Each sorcerer is equipped with a "spear" which contains the *arukwi* substance. The "spears" are held over the *sungule* (which is later consumed by the sorcerers) and then heated over a fire. Then they take small sharpened sticks, a favourite implement is the midrib of a coconut leaf, and bring it into contact with the *arukwi*, through which it becomes charged with lethal power. From then on there is a variety of strategies. The sorcerers either visit their victim, who is by then probably lying immobilized in his house and, at a convenient moment, they "shoot" their projectiles into his body. The victim feels no more than the bite of a mosquito.

Or else the sorcerers can operate from a distance. They take their charged "spears"[6] and stick them into a special lime or lemon fruit called *nihinge*, or muli in Tok Pisin. These muli are planted by sorcerers in the undergrowth deep in the bush; they are invisible to the normal eye. Each sorcerer takes his *nihinge* and throws it backwards over his shoulder, calling the name of the victim at the same time. The "spear" flies through the sky and finds its target on its own. No obstacle can stop or hinder the flight of a spear, it passes through doors, walls and even concrete buildings. This method is favoured at night and what the normal eye sees in this case are bright meteorites falling from the night sky.

Sorcerers, in effect, have command over an infinite range of varieties and capabilities. Their ability to make themselves invisible lends them the potential of omnipresence. As one man told me, a sorcerer could be standing just next to you and you would not be able to see him. But they can do more than simply vanish into thin air. One favourite method of sanguma sorcerers is to abduct their victim from his house or garden and leave in his place one of their own, who takes on the appearance and the habits of the victim. The sorcerers take the latter to their hideout in the bush and work him over for a few days and then return him to his family. Not even the victim himself will necessarily recall what he has been through, but his days are numbered and he will die without ever disclosing what happened to him. Accidents, too, are frequently explained in terms of sorcery. If someone falls from a tree and is killed it is likely that it will be put down to sorcery. The mode of death in such a case is apparent and is not under discussion but it is the cause of death, the fact that the person fell from the tree in the first place, that is put down to sorcery. Here again the dual aspect of poisin-sanguma is in play. Accidents do not end fatally unless the victim was prepared in advance and weakened by *sempeneineme*.

People are to a large extent powerless against sorcery. The best way to keep sorcerers away, the people say, is to avoid quarrels and conflict, but evidently this is not easy. Nowadays, younger men often leave the village for the towns when they feel threatened by

sorcery or when they have received signs that they are likely to become victims. Physical distance is not necessarily a safeguard against sorcery; but it is not the miles and hours that protect them from any magical threat, it is rather the cultural distance, in the sense that in this case the danger emanates from the world of the village whereas, in contrast, the urban environment with its aura of modernity promises safety and protection, at least from sorcerers.

If it is not absolutely necessary, the villagers also keep away from the bush at night, do not frequent other villages and stay there overnight, and are wary about accepting food and betelnut from people they do not know well. They also have at their disposal a number of prophylactic measures with which they believe they can detect and deter sorcerers. These are personal charms or talismans. These go under the generic term of *sule* and consist of various body parts of deceased ancestors such as the bone of the little finger, a tendon (*ningile*) or the ulna (*simbilehe*). Normally they are kept hidden away in the house and are carried only on special occasions as, for instance, when they travel at night or to other villages. They are believed to make a sorcerer visible and counteract all other forms of deception as well.

But, if sorcery is performed properly there is little chance of recovery. Usually the victims realize too late that they have been sorcerized. In the early stages of a *sempeneineme* affliction they can be cured by *hilenge* healers who extract harmful substances from the body. Western medicine can alleviate the symptoms but cannot cure the affliction. When incurable patients visit the hospital they are often told they are suffering from a sik bilong ples (a village illness), that nothing can be done for them, and they are sent home again. For the villagers this is confirmation that even "Western" doctors believe in the existence and efficacy of sorcery.

In earlier times, various divination methods were used to elicit and identify sorcerers who were believed responsible for a death. The most common form involved the use of a long bamboo pole (up to four to five metres in length) and a *simbilehe* bone. The bamboo was held horizontally by a row of men on the open palms of their hands. Whilst the bamboo was rhythmically beaten with the *simbilehe* bone, the different wards or kastom ples were called out, one after the other. When the name of the culprit's ward was pronounced, the bamboo would quiver and shake. The process was then repeated, calling the different lineages associated with that specific ward. Again the bamboo would "make noise", i.e. react, when the suspect's lineage was named. In the final step, the individuals of the specific lineage would be called out and when the name of the sorcerer responsible was named, the bamboo would shoot out of the men's hands. Retaliation, older men recall, would be swift and without mercy. The sorcerer's hamlet would be raided in a dawn attack and the culprit killed, or else he himself would be subjected to a sanguma attack.

Divination, today, is forbidden by law and the villagers feel cheated and robbed of an efficient means of counteracting this omnipresent threat to their lives. The sorcerers themselves, they maintain, do not heed the law but persist in their evil business, knowing full well that the chances of being discovered and identified by the means and methods of government law are minimal. If, on the other hand, the sorcerers knew that the villagers had an efficient instrument of detection at their disposal in the form of traditional

divination, they would think twice before performing sorcery. Divination would function not only as a means of identification but also as an effective deterrent. In 1985, following a major sorcery dispute in the village, the councillor of Warengeme planned to bring in a motion in the Dreikikir Local Government Council (LGC) in which he wanted various traditional divination methods reintroduced and declared legal again in order to combat the growing incidence of sorcery in the area. His letter to the president of the LGC was read out at a council meeting and was discussed in public and was greeted favourably by the villagers. After that, however, nothing more was undertaken and the letter was never sent to the LGC. The event had more relevance in the context of the public performance of the village leaders and as a demonstration by the councillor that he was actively concerned about the village and not merely using his leadership position for acquiring status and influence.

Sorcerers are not intrinsically evil persons. This distinguishes them from that other category of malevolent evildoers, witches. They do not kill for fun or because they are compelled to kill through an inner, uncontrollable drive. Sorcerers act consciously, drawing on methods and procedures they have been taught, and go about their business methodically. Sorcery is nearly always performed on a hire basis. A person requiring the services of a sanguma man will discreetly contact a sorcerer and negotiate the terms of the contract. The latter will then gather his sanguma comrades and together they lay down their strategy. On occasions this role can be taken over by a middleman or go-between who is himself not a sorcerer. The contractor has contact only with the main sorcerer or the middleman, the others remain unknown to him. In theory, payment occurs in two instalments. The first instalment, called *laninde nunguho*, is paid before the sorcerers begin their work; *landusse uite* which literally means "to close the door" refers to the final payment and is made when the matter is settled, i.e. when the chosen victim is dead.

This transactional aspect of the deal is often itself the source conflict and can lead to retaliatory sorcery from both parties of the contract. The contractor delivers himself into the hands of the sorcerer and exposes himself to possible attempts at blackmail. Sorcerers, it is believed, are likely to play a double game and contact the chosen victim in the hope that he, for his part, will pay them more to have the original contractor removed. Another danger is that the sorcerers can keep on demanding further payments, always backed by the threat of disclosing the identity of the contractor.

The pressure on the sorcerers is distinctly smaller. All they have to fear is that if they do not carry out their assignment in a given time, the contractor will engage a new group of sorcerers to threaten the original one in order to compel repayment of the money the contractor has already paid. The danger that he might reveal the names of the sorcerers to the public is minimal, because firstly he would have no proof whatsoever and, secondly, the villagers would become suspicious and would want to know how he had got to know the sorcerers and why he had contacted them in the first place. Thus, he would be forced to reveal his malicious intentions.

Threats, blackmail and intimidation appear to belong rather to the realm of organized crime and gangsterism but, according to my informants, the same mechanisms are at play in the realm of sorcery and politics among the Wam. The most elaborate form of

intimidation is when a group of men start "cleansing" a village or a hamlet of sorcery. The procedure basically entails that a group of men – preferably men experienced in *hilenge* healing, though others claim that only sorcerers themselves can perform the necessary rites – purge the hamlet or village of all potentially dangerous essences and, figuratively speaking, lay a protective ring around the settlement, thus safeguarding the inhabitants from sorcery attacks in the near future. The crucial question here is often, who approached whom with the suggestion of such a procedure? Was it really the concerned members of a village seeking protection, or was it not the protectors "offering" their services, intimating that if they are declined, the village would most likely be subject to sorcery?

Apparently some men from Hambini approached a group of men from Warengeme 2 some years ago with the demand that after a series of inexplicable deaths they should do this in Hambini. The Warengemes agreed to this and, after payment had been made, they went ahead with the necessary procedures. Shortly afterwards, another village faction – men closely associated with the South Seas Evangelical Church – heard of this and notified the police, claiming that the Warengemes had blackmailed the Hambinis into doing this, by threatening to use sorcery if they did not have their village protected by them. The Warengeme men were arrested and taken to court, and in the course of the proceedings the notorious *perengele petulemene* was handed over to the authorities.

With reference to the person of the sorcerer, one has to distinguish between different levels of perception. On the one hand, one encounters the stereotype view of the sorcerer in which he is depicted as a vile and dirty old man, full of hate and jealousy towards his fellow men, and living a solitary life in a hamlet of his own without wife and children (cf. Lindenbaum 1981). The stereotype, as so often is the case, does not necessarily conform with the appearance of those individuals who, in the realm of suspicion, village rumours and gossip, have the reputation of indulging in the art of *arukwineme*. Theoretically, any man can learn the trade of sorcery, irrespective of age or marital status. Sanguma is often associated with the *kwal* stage of the tamberan, where it is believed that men were prepared for sanguma without necessarily going through full initiation. But there are only a very few aged men left in the area who have seen *kwal* and who are no longer regarded as physically fit to perform sorcery. Some of these men acquire the reputation of having been famous sorcerers in the past, but they are not stigmatized for this, nor do they have to fear delayed retaliation for their past deeds; on the contrary, they are often pointed out and referred to with awe and a certain degree of pride.

In Warengeme, or to be more precise, belonging to Warengeme, are five reputed sorcerers onto whom suspicion is most likely to fall when the villagers seek to explain a recent death. They come from different wards and do not constitute a uniform group in terms of age or marital status. They do, however, have one telling feature in common, significantly, in varying degrees, and that is that they could be described as residentially peripheral or fluctuating. By this I mean that from the focus of Warengeme, they are for most of the time not visibly present in the narrower confines of the village, and the other villagers do not exactly know where they are to be found all the time. Furthermore (with one exception) they do not belong to one of the churches. This gives rise to suspicion, because the people think they must still be deeply involved in kastom and cannot expose

themselves to the eyes of God lest he should identify and punish them. Another consequence is that they are not seen on Sundays in the village, the day the villagers usually come together and see each other in, or on their way to, church.

Two of these men actually have residence in two villages at the same time. They both have two wives and both second wives have returned to their natal village with their children – in one case this is Luwaite, in the second Womsok – and the two men spend most of their time outside Warengeme, but nobody can be absolutely sure that they are actually staying in their second residence when they claim to be. This issue was specifically raised during a sorcery dispute in 1985, in which the men from Womsok were invited to come and give evidence on some matter. They said that they did not favour the presence of W. (one of the suspects) in their village, firstly because of his general reputation as a sorcerer, but more specifically because they never could be sure where W. was staying at any specific moment and that the people of Warengeme probably had the same problem. In Warengeme he could claim to be going to Womsok and there he would say that he was going to stay in Warengeme for a while, but in actual fact he would be hiding away in the bush preparing sorcery.

Two others, P. and M., either live outside Warengeme or, in the case of M., in a fringe hamlet down near the Wambe river. Neither takes part in the village life of Warengeme, although they are still reckoned to belong to the village. The fifth man, N., best fits the stereotype picture of a sorcerer the. He is a man in his late thirties and he is not married. Although he officially has a house in one of the hamlets he drifts around in the village a lot, often spending his nights away from home. He does not appear to be seriously interested in growing coffee and earning money and, furthermore, he is what is generally called a pukpuk man, i.e. he suffers from ringworm. Taking all these traits into consideration, he falls far short of the ideal, and indeed even the norm, of how an adult Wam man is expected to live and behave.

The stereotype and the suspect are two facets of the picture of sorcerers. Whereas the former fits into the pattern only marginally when sorcery becomes a manifest issue in public discourse and in the search for explanations of death and misfortune, the latter often finds himself woven into the theories and arguments in rumour and gossip and during sorcery disputes. But he does not necessarily occupy the centre of the field when sorcery accusations are raised. These are very often directed towards people, to be more precise towards men who themselves were not involved in the actual sorcery but who hired the sanguma in the first place. The actual sorcery act is detested and condemned but the hiring is equally grave and damnable. The hirers are the real culprits responsible for the act, whereas the actual sorcerer is often relegated to the status of a tool and an evil and detestable henchman.

When talking about sorcery, it is necessary to distinguish between different levels of context upon which sorcery operates. Firstly, one encounters it as a system of beliefs and theories, which we could name the "lore of sorcery"; secondly, sorcery is a means of retrospective rationalization about death and misfortune; and, thirdly, we have what one could call the evidential aspect; this refers to the realm of rumours and the appearance and interpretation of signs, which interlink the two other levels.

The "lore of sorcery" refers to the knowledge and beliefs about who and what sorcerers are, the way a man learns the art of sorcery during initiation, the substances the sorcerers use, their mode of operating, the techniques and tactics they apply, and the different types of death that result therefrom. Despite the great diversity of methods and techniques sorcerers use – they appear not only omnipresent but also omnipotent – sorcery is rule-governed, i.e. it is a culturally organized set of phenomena (Ledermann 1981:19). People learn and know about sorcery from a very early age, and the majority of adults have a basic knowledge of how sorcery works and how sanguma men operate and what type of signs they are likely to communicate to the villagers. This type of "lore" constitutes the foundation of rationalization and argument during disputes and mediations on sorcery and also in the interpretation of signs.

Unlike other Melanesian societies, sorcery among the Wam is not usually an issue in illnesses, at least not as long as the illness prevails. Maybe some time after the patient has recovered from his affliction it will be interpreted as a failed attack of sorcery in one form or another but not during the illness itself. At the time, the patient and his close kin and the healers responsible for the treatment seek the causes of affliction in other fields (trespassing spirit places, disregarding food taboos during gardening, having had contact with women during menstruation, or petty quarrels with neighbours or close kin).

On the other hand, deaths in the end are nearly always put down to sorcery or, at least, sorcery is involved somehow in nearly every case of death. I say in the end, because between the event of death and the first tentative hypotheses and accusations concerning the causes of death, weeks or months, sometimes even years, can pass. The first reactions to death are grief and sorrow, undirected anger, and very often also a pragmatic concern about the coming funeral, the problem of organizing food for a large number of people, and also the costs the event is likely to entail. The cause of death is seldom extensively addressed at this early stage and the kin of the deceased are more likely to emphasize the point that they do not know what their kinsman died of and that they have no intention of searching for the causes of, or the agency responsible for, the death. It is only after several weeks or months that rumours and gossip arise and the first tentative theories are advanced as to who is to be blamed.

The relatives go over the deceased person's life, review his last months, ascertain with whom he or she had frequent contact, and try to find out possible sources of tension and conflict which do not necessarily result from the recent past but may go back many years, even as far back as the last generation. Suspicions and theories are discussed with close associates and then tested in a gradually expanding circle of people. This has the aim not only of verifying or falsifying the different hypotheses, but also of sounding out the basis of support and the field of potential allies within the village. Whether or not they will finally raise an accusation is not only a question of being in possession of sufficient evidence but also of having the assurance of a substantial backing from one's co-villagers. This, in turn, very much depends on who the accused person is.

It is in this context that sorcery operates in its form as a retrospective rationalization. By drawing on the contents of the "lore of sorcery" and linking them up to the deceased person's biography and to his own history of quarrels and conflicts, but also to that of his

various closer kin, the villagers search for motives, a plot, explanations and reasons for his death which in the end will lead them to the person responsible. This can either be the sorcerer or sorcerers themselves, but more likely it leads to the person or the group of people who hired the sorcerer and who are judged as the real culprits. These explanations and rationalizations never transcend the quality of theories and hypotheses, just as, or rather, just because, the basis of evidence never goes beyond the level of suspicions and isolated clues or hints that point towards the suspect's involvement.

Such clues are often only very meagre and refer to evidence such as statements made by the suspect on certain occasions in connection with the issue at hand, or the way he is said to have reacted in certain situations, e.g. at the funeral or, possibly, recent visits by the suspect to hamlets or other villages he does not usually frequent but where a potential sorcerer is believed to live.

In the process of gathering and constructing evidence, signs or so-called piksa ("picture") or *malehe* play an important role. Such piksa are significant in a double sense. Firstly, in the context of rationalizing about death and in the search for sorcerers and the causes of death and, secondly, as a means of communicating grievances and of expressing threats in situations of conflict. The two contexts are interrelated and flow into each other.

The period immediately following death is the time when signs are most likely to appear. At such times people are also more alert and attuned to receiving them. Any event which lies outside the habitual rhythm of everyday life can, but need not, acquire the quality of a piksa. This can, for instance, refer to the cracking of a pot over the fire, the collapsing of the roof of a house, or a person tripping and falling where otherwise people do not trip and fall, or any similar kind of extra-ordinary event.

Again, the discovery of faeces in locations where one does not normally expect to find excrement can, but need not, be interpreted as a sign related to death. One day the daughter of a recently deceased bigman was down by the stream rinsing a clay pot. When she removed her hand from the pot she found it was smeared with faeces. She was frightened and ran back to her hamlet and told her family about the incident. She described what had happened and the event was interpreted as a clear piksa that explained some of the circumstances of her father's death. Two items were regarded as meaningful. Firstly, the fact that it had been a traditional clay pot indicated that her father's death was connected with the sphere of kastom and the tamberan and, secondly, the fact that the faeces had not been fresh but a few days old showed that the cause of the death lay many years back. Later, these two interpretations became redundant again, when fresh evidence of a similar nature was produced that pointed in a different direction.

Such piksa, it is believed, are made and emitted by the spirit of the deceased person itself. In the final stages before death, people are hardly ever capable of naming the persons who have used sorcery against them or even of giving a hint to the source of the affliction, either because they themselves do not know, or because, and which is more likely, the sorcerers have "closed their mouths". It is only after death that the spirit of the deceased is able to disclose who the killers are, but since the person is no longer able to communicate in human speech, he has to revert to the use of sign language.

The second source of such piksa, people say, are the sorcerers themselves, who are accredited with a morbid sense of humour. They appear to gain satisfaction from leaving behind their credentials, so to speak, and from giving the relatives small clues as to the authorship of the deed without really having to be afraid of being discovered.

Another category of piksa comprises those signs that are wilfully placed by human beings with the clear intention of intimidating or threatening others and of communicating grievances in conflict situations, such as when land boundaries have been transgressed or someone has failed to repay an old debt. Here again the variation of expression is large but the most common forms involve the conscious misplacement of objects and the deliberate destruction of various crops people have recently planted.

If a man, for instance, finds excrement in front of the door of his house in the morning he can take it as a clear sign that someone has the intention of staging a sorcery attack against him in the near future; the same applies if he finds a yam tuber placed in front of his door. The same two items found at the back of the house signify a female member of the household, either his wife or possibly a resident sister of his. If a mother finds a stone in her mal (carrier cloth/baby sling) she is being told that her baby is marked for sorcery.

Banana trees are female symbols. When a person finds a young banana shoot cut down and laid over the path to the person's garden or at its entrance, he or she is being told that a daughter has been selected and will shortly be attacked by sorcery. The level at which the cut has been made indicates which daughter is meant. If the cut has been made at ground level it means the eldest or elder daughter; cuts further up the stem indicate younger daughters. Identical signs apply to male children, though here the signifiers are not banana plants but young coconut or betel palm shoots. If a freshly-planted coconut palm is ripped up by the roots, the person receiving the sign will know that one of his *agel anheil* is being threatened.[7] In the context of sorcery threats, the leaves of the *isokwor*, *mati* and *uiril* cordylines are signifiers for *meinheil* relations. A man who finds a bundle of such leaves left in a conspicuous place will know that someone is out to eliminate one of his tambu. He will, however, not immediately know exactly which one of his many *meinheil* is meant, although he can reckon that it is one of his close relations that is being targeted.

In yam gardening, poles are often erected around a central post along which the vines of the yam shoots will climb and gradually "build a house", as the people say (rather in the style of an Indian teepee). In sorcery symbolism the central post stands for the father, the surrounding poles signify the children. If a man finds that such a construction in his garden has been destroyed, it indicates that his whole family is marked for the kill, if only the central post has been removed, he will know that he himself is threatened; similarly, if one or several of the poles have been removed, his children are being threatened. Often it is enough to cut through the climbing vines to make the message clear.

These signs do not exist as part of an abstract symbolic order in terms of which people merely talk about dangers and conceptualize sorcerers' threats. On the contrary, they are actually applied in reality and used for conveying threats and expressing disagreement in serious conflict cases. The villagers take them as clear proof that sorcery is not an issue of the past alone or something that belongs to the realm of make-believe and fantasy, as is sometimes implied by modern institutions but instead constitutes a genuine menace to their

existence, and that adversaries in disputes and quarrels are likely to resort to sorcery as a viable means of pushing through their interests.

People react to such signs with fear and anger. Naturally they feel immediately threatened, but at the same time they are left in the dark as to where the danger is coming from, or from whom it is coming. In most cases there can be no doubt about the addressee of the message because the senders generally choose and place their signs in such a manner that leaves no room for errors. The most effective countermeasure in such a case is to take the initiative and bring the issue to public attention and make a "big thing" of it. During my stay in the village, I witnessed such incidents several times. The receiver of the piksa, holding the evidence in his hand, would take it to either the councillor or the magistrate, shouting at the top of his voice and gradually working himself into a fit of fury, thus drawing the attention of large parts of the village. A spontaneous meeting would be organized where the circumstances under which the piksa was found would be discussed and the participants would attempt to shed light on the matter and try to elicit telling patterns that pointed to the source of the sign (see plate 8). At this point the person who had received the sign would himself utter threats and warnings that if anything happened to his family he himself would resort to sorcery in retaliation. Nothing would result from such a meeting, understandably, nor would any further action be taken. This was neither expected, nor was it even intended. The main purpose of such a gathering was to make the incident known to as many people as possible and make it a central issue of village importance in the hope of deterring the sorcerers from putting their plan into action. No sorcery attack actually ever occurred after the appearance of such a piksa, at least not in the period immediately following the incident. The village would return to its everyday routine very quickly. Even the receiver would relax again after a few days, but the episode was not forgotten, it was merely shelved.

When someone from the receiver of a piksa's immediate, or at least close, circle dies – weeks or possibly months later – the piksa together with fragments of evidence of a similar nature will be brought out again and tested against the circumstances of the death, and the people will check whether everything somehow fits together. In so doing, those involved show a high degree of flexibility in adapting the original reading of the sign to conform to the facts at hand, or the facts at hand are explained in such a way as to confirm the message of the piksa originally received. Thus, for instance, if a man finds his coconut shoot cut down, he will take it as a sign that a son of his is marked for sorcery. If a few months later the man's younger *brother* dies, the explanation for the death will probably be that the sorcerers were originally planning to kill the man's son but, being disturbed during the process, they opted to kill the brother when an opportunity happened to arise. In this way the piksa does not lose its validity and the people can search in the same paradigm for a possible culprit. It is often irrelevant who the actual victim is, as long as the person's death hurts and harms the individual who stands at the centre of the conflict from which the sorcery issue originally arose, and against whom the sorcery attack is intentionally directed.

Over weeks and months evidence is gathered, compiled, sounded out and projected onto a number of potential suspects. Those in charge of building up a case – men from the

deceased person's close kindred – scrutinize the suspects' personal histories of quarrels and disputes in search of a possible motive; signs and piksa are interpreted and tested; they search for irregularities in the behaviour of the suspects and they run through statements and comments and allusions the suspects are said to have made on specific occasions and that could be incriminating. The field of suspects, who are not necessarily the actual sorcerers but more likely the contractors, i.e. the persons that ordered and paid for the victim to be killed, is gradually narrowed down until only one person or a small group of people emerge as the most likely candidate(s).

Whether or not an accusation is eventually raised is a delicate matter that depends on a number of factors, such as the status and personality of the suspect, the prospects of receiving support from third parties, the status and the importance of the deceased person, the cogency of the evidence available, and the political atmosphere of the village in general at the specific time. Often the people only venture to raise an accusation after a series of deaths which display a more or less similar pattern and point in the direction of the same suspect or group of suspects, because in such a case they reckon they can rely on a larger basis of support and that the atmosphere will be more in their favour.

Accusations are delicate issues. Not only can they fail and leave the death still unexplained, they are very likely to potentiate antagonism, aggravate smouldering conflicts and even create new enemies. Probably the biggest danger they entail, however, is that they can backfire in the sense that the prosecutors can suddenly find themselves in the position of the accused if the suspects are able to refute the evidence and invalidate the charges brought against them. They can then turn the case into an accusation of malicious gossip and slander or, even worse, they can turn the tables and create the appearance that in actual fact the others have been trying to sorcerize them.

NOTES:

[1] Evans-Pritchard's (1937) distinction between sorcery and witchcraft is still applicable here: sorcery refers to the deliberate use of magical rituals to injure and kill whereas witchcraft refers to an inherent and often unconscious capacity to harm others.

[2] According to Höltker (1963:335) and Schmitz (1959:47) the term sanguma stems from the Monumbo language of the Madang Province. Most likely it has spread all over Papua New Guinea through contacts established by early labour migration.

[3] For a more detailed account of a sorcery initiation see Daimoi (1976), who describes such an event among the neighbouring Bumbita Arapesh. It appears to be very similar to what I heard among the Wam, which is not surprising since the Bumbita claim to have relearned the art of sanguma from the Wam after having dropped it from their cultural repertoire (cf. Leavitt 1988:2) a long time ago.

[4] The death of young babies or highly pregnant women attains special significance because people fear that their death either signifies the emergence of a new generation of sorcerers or an impending sorcery attack.

[5] Abdominal swelling is manifest in various disorders in different organs, such as in a number of forms of gastroenteritis, or intestinal obstruction, but also as a result of liver dysfunction or some forms of heart failure.

[6] The sharpened sticks to which the sorcery power is transferred are also called *perengele.*

[7] *Agel anheil* or *hauneil* a mother's brother or father's sister's husband. One of the metaphors used for this category of kin is *ombosahaha* which means "root of the coconut". The counterpart for the sister's son is *permute*, the generic term for fruit. Here it refers to a coconut.

PART TWO:
THE VILLAGE IN CHANGE

SECTION THREE
THE PROCESS OF CHANGE

Section three of the study deals with various aspects of the pervasive change which Warengeme has been confronted with and has had to come to terms with over the last seven to eight decades. It contains six chapters.

After a brief outline of the concept of encapsulation I go on in the opening chapter (9) to describe the different forces of change. These include the imposition of colonial rule and, later, the establishment of state institutions in the village. Another aspect has been the development of bisnis (business) in the area and the introduction of a monetary economic system which started with labour migration in the early decades of this century. Notably, the forces of change also refer to the arrival of the Christian missions and the establishment of institutions of formal education in the area.

I then go on to describe some of the effects the process of change has had, and is having, on the Wam social system. Threatening land shortage due to the expansion of cash cropping is one aspect. This process is accentuating a rift between different segments of the village, which in previous times was not discernible, namely between villagers who can lay claim to being original settlers, and those whose ancestors at one time immigrated to the Warengeme area. This aspect is dealt with in chapter ten. With the ever-growing significance of money and the encroaching monetarization in the fields where previously formal exchange was practised, the foundations of the traditional social system are being eroded. The process is being underscored by the cessation of the all-important ritual system, the tamberan, with the result that the pivotal concepts of nurturance and substance and the corresponding codes of formal exchange and sharing are losing their significance, more precisely, the concept of sharing is being extended and being declared, next to monetary purchase, the only valid code of interaction in the modern village community. Formal exchange and the duty of reciprocity, in turn, are negatively connoted. The erosion of formal exchange is the subject of chapter eleven. In chapter twelve I turn to a case study to illustrate how change manifests itself in practice. It deals with the death and funeral of a man called Anisi. The event also allows me to introduce some of the central figures who play prominent roles later on in the section on the Bisnis Movement in specific and in the latter half of the study in general. In the main, these are Anisi's sons.

After this excursus into the realm of practice I return to discuss the two concepts kastom and komuniti in more detail in the 13th chapter. They are vital concepts for, and in, the process of development, and strongly coin the idiom of the village discourse on socio-cultural change. In chapter 14 I address the issue of pervasive factionalism and introduce the reader to the two change movements – the millenarian and the Bisnis Movement – which I deal with extensively in sections four and five. They represent two opposing strategies through which different segments of the village hope to attain an equal standing with the encapsulating world. Both movements profess to be development-oriented but a closer look will reveal that they also represent political factions contesting for influence in the village.

When we speak of modernity and the past, change and tradition, the question arises what constitutes tradition in Wam culture? How traditional were the Wam in 1920 or 1900? As Margaret Mead (1938) found in the case of the Mountain Arapesh, the Wam too can be described as an "importing culture" and cultural flow and change has always been present. There is much evidence that there was an ongoing exchange of cultural properties between the various groups in the Torricelli Mountains (cf. Tuzin 1976:72). With the movement of peoples and ideas, the Wam adopted many new elements into their culture, such as various foodstuffs, beliefs and rituals within the secret male cult, and even sorcery practices. There is a difference, however, in the change that set in through, and after, colonial contact, in the sense that the earlier cultural flow was an exchange of cultural properties between, at least, very similar types of cultural systems in terms of economy, social organization and the belief system, whereas the later influx was something different.

Contact with Western colonial culture initiated change in a new dimension because here two radically different systems encountered each other and created a situation where one system, the alien, became dominant and the indigenous cultures became subordinate. The setting and the relationship that evolved out of this contact, the colonial situation, can be described by the term encapsulation. Encapsulation involves larger "systems based on different organizational principles encapsulating smaller systems, which does not preclude but does not necessarily imply the naked use of force. None the less it involves encirclement, absorption and enveloping, and provides the encapsulated society with little choice and limited strategies. It is therefore encapsulation in a metaphorical and literal sense. It assumes larger and more powerful systems engaging weaker and smaller structures in which encapsulation is an inescapable factor and ineluctable destiny" (Ahmed 1980:4).

Encapsulation became manifest in various forms; politically through pacification and through the establishment of Australian control and administration; economically through the introduction of a capitalistic economic system, the establishment of the indentured labour system, the introduction of cash crops, and the gradual monetarization of the village economy; spiritually through the spread of Christianity and the proliferation of the various missions; intellectually through the introduction of an alien system of epistemology, new forms of encoding cultural concepts and contents, novel forms of transmitting information and knowledge, and new values.

The earliest contact the Wam had with colonial powers goes back to the early decades of this century when German labour recruiters entered the area from the north in search of native labour for their plantations on the coast of New Guinea and islands of the Bismarck Archipelago. But these were only sporadic contacts, and colonial rule did not really make itself felt in the Wam area until the Australians took over the old German colonies after the First World War. The Wam never attempted by force to oppose colonial rule. Minor insurgencies and the few killings of whites in neighbouring groups (Allen 1990:185,189; Townsend 1968:230) and the immediate reaction by the colonial power had shown the Wam the futility of such attempts. Lacking viable alternatives it seemed to them more opportune to "play along" and take advantage of the opportunities the foreign system

offered them in order to redress the imbalances and inequalities created. In a patrol report shortly after the Second World War, the Wam are described as being "a happy, law abiding [group] and much more progressive than other areas in Dreikikir" (Doolan 1950:2).

Over the years and decades the Wam were not only occupied with existence within their own cultural confines, they increasingly became engaged in the encapsulating system, either in that they left their own area to work on the plantations or in other domains of the colonial economy, or else that the colonial rule imposed itself on the Wam in their indigenous setting through the introduction of new political, legal, and religious institutions. Colonialism not only affected the flow of everyday life in many ways, it also lent the central themes of equality and hierarchy in Wam society a new dimension, in the sense that the Wam became increasingly confronted with an alien system and its exponents, in the guise of administrators, missionaries, employers, and others, which appeared to them vastly superior in many ways but which, at the same time, was a system apparently not prepared to grant them equal status, either as individuals or as a culture as such. Try as they might, the foreigners treated them as friendly and likeable, but also as ignorant and irresponsible beings. Time and willingness on their part to cooperate and adopt new forms of living did not bring any fundamental changes to the situation.

Officially, the colonial era ended in 1975 but this did not necessarily mean the end of encapsulation. The advent of political independence did not effect a substantial transformation of the situation for the Papua New Guinean villager. It merely substituted those in power. Superficially, the country is politically united but there is an expanding cleavage, separating the country into two sectors which are travelling into the future at different speeds. One sector refers to the expansive, and still more traditional, rural areas, the other to the modern urban centres. The configuration reflects a centre-periphery model. The pace and trends of change are dictated by the centre, the seat of political and economic power, whilst the villages are left struggling behind.

Like other Pacific cultures, the Wam too have entered into the "post-historical" phase of globalization (cf. Kearney 1995, Wassmann 1998) or, to put it more precisely, they have been swept up by what is termed globalization. However from their point of view, I believe, this new key term does not invalidate the concept of encapsulation. The world is seeing the de-nationalization and de-centrelization of economic relations, of financial movements, of the flow of information and of the migration of peoples, leading to a increasing condensation of time and space. The Wam are enmeshed in this network but they are not able to actively partake in it nor shape it since they are lacking the necessary facilities and knowledge. Although it is difficult to make out a centre in the global world they certainly still are only peripheral with little choice and limited strategies to change their plight. The basic inequality between the local culture and the global system is as present as ever.

Today, it is no longer only Australians, other whites, and, in more recent years, Asians who represent the global players and dictate the terms of encapsulation, but also a growing, elite class of indigenous New Guineans, educated and urbanized. These include mainly the

politicians, bureaucrats and businessmen, but, more generally, also those New Guineans who appear to have made the grade because they have found access to the wage employment sector and live in trim houses in urban centres, possess cars of their own, and generally are able to profit from the apparently better facilities in the towns. Modern national Papua New Guinea society appears to be becoming increasingly fragmented and stratified, with a small, but rich and powerful, mainly urban elite dominating a large and underprivileged, rural population. This, at least, is the view taken by many villagers in the rural areas in general, and in Warengeme in particular.

The process of encapsulation, during which the Wam became absorbed in, and subordinated to, a larger and more powerful system, set in motion a second process which we could define as marginalization. By this I mean the gradual transfer of the power and ability to decide on important social, political and economic issues to institutions and agencies outside the sphere of influence of the Wam, but to which they are subject and the decisions and policies of which they have no alternative but to accept. Beginning in colonial days and lasting until the present, it appears to many villagers of Warengeme that they have lost the capacity to significantly shape their own destiny. They are dependent on forces which they cannot control. This impotence refers to many domains of life which the Wam judge to be of critical significance to their existence as a society and a cultural group. Naturally, they can still decide for themselves on many issues but these are minor, or self-evident, matters, such as where to set up residence in the village, where to lay out a new garden, or whether to get married or not. But when it comes to fixing the price of coffee, determining the costs of secondary education, deciding to have a new road built, whether the Aresili Catholic Mission is to be kept on, when the Chief Apostle of the New Apostolic Church is going to visit Papua New Guinea, or whether the Sepik Producers Coffee Association is going to pay a dividend to its members this year or not, these are decisions and processes over which the villagers as individuals, or Warengeme as such, have no influence. They are dictated by outside forces.

The Wam's response to colonial and post-colonial encapsulation is largely dictated by a set of strategies through which the people looked forward, as they still do today, to achieving full participation in the encapsulating, global system and regaining the autonomy of deciding on important economic, political and cultural issues for themselves, and being in a position to shape their own existence and destiny, and thereby attain a status which is equivalent to that of their encapsulators, be they Australians, Europeans and Asians or, today, other New Guineans. As mentioned above, the question of hierarchy and equality acquired a new dimension in the context of the colonial setting. The struggle to be equal was no longer only an aspect of the social process within their own social system, it also became one of redressing the imbalance between the indigenous society and the encapsulating, wider system. In the process, the two systems, the internal and the external, became interlinked, and the structural properties of the one system began to affect the other in a special, dual sense. The Wam began to develop and deploy strategies to achieve equivalence with the superior external system but, simultaneously, they began to take advantage of the opportunities and resources the external system offered, in order to

support the ongoing struggle for individual status and power within the internal system. In other words, whereas the Wam as a social and cultural group strove for equality with the colonial culture and society (today it is with the post-colonial establishment), individual men exploited the properties of the colonial system in order to boost their own position and power, and create hierarchy within their own society. In the main, this latter process refers to the adoption and exploitation of the economic opportunities the external system increasingly provided (cash cropping, monetary system), and of the political positions the colonial administration created in the village (the various appointed government officials, today the elected political representatives), but it also relates to the religious institutions colonialism introduced (missions, churches) and, more generally, new forms and fields of knowledge, new channels for the acquisition of knowledge (education) and the codes (reading, writing) in which these new forms of knowledge are inscribed.

CHAPTER NINE

THE FORCES OF CHANGE

The encapsulating system imposed itself on the Wam in many ways and forms. It was a slow and gradual process, but penetrating all the same. The first contacts were through labour recruiting, going back to the German period before the First World War. Young men and even boys signed on and were taken away to work on the plantations on the coast and islands. Some of them did not return to the village for many years and even decades. Under Australian rule the volume of indentured labour increased, and in the 1930s the Wam villages became a major recruiting area. After the war, labour migration continued but it subsided during the sixties, and was gradually substituted by cash cropping as the main field of economic venture and source of income. I deal with the growth of cash cropping in more detail below. For the present I shall turn to a number of other forces of change which have transformed the face of Wam society.

POLITICAL CHANGE

With Australian rule came pacification and administration. The Wam never were a warlike people and armed conflict on a large scale was sporadic and seldom. Still, pacification brought changes. The stockades around the hamlets disappeared, and individual mobility increased in the immediate and more distant area. Aitape, the district headquarters on the coast to the north of the Wam area became the central point of orientation. Not only were the administration headquarters located here, it also became the main labour recruiting centre and it was from there that the men were shipped to, and from, the plantations and towns they went to work in. Back in the villages, the kiaps, the administration field officers, introduced the Wam to new laws and regulations and imposed new standards of hygiene and cleanliness on them. Hamlet burials were forbidden, and a new communal cemetery was established, tracks between the various wards and villages had to be cut and maintained, the living areas were cleared of grass and undergrowth, and latrines were introduced. If the villagers failed to comply with the new standards they were penalized. They also became subordinate to a new legal system. Major conflicts and wrongs one suffered could no longer be resolved through swift physical retaliation but had to be passed on to the kiaps and to outside alien institutions of adjudication. Often the people maintain that sorcery proliferated and became more widely used only after pacification, because the villagers were no longer able to use force to redress grievances but were compelled to revert to hidden forms of retaliation instead.

It was at the beginning of Australian rule that the village of Warengeme as such was conceived and came into being in the first place. Formerly, the wards had constituted the only meaningful, larger political and ceremonial units. At some time in the 1920s the four wards Talkeneme, Wolhete, Warengeme and Wohimbil were conjoined and, from then on, defined and treated as a village unit. The same was done in the other Wam villages as well. For administrative purposes the village was subdivided into two entities, Warengeme 1 consisting of the wards of Warengeme and Wohimbil, and Warengeme 2 made up of the

wards of Talkeneme and Wolhete. The division reflects a traditional partition in the sense that, firstly, the people of Wolhete and Talkeneme regard themselves as the original inhabitants and landowners in the area, and maintain that the present Warengeme 1 is made up of immigrant groups, and, secondly, that the wards of Warengeme 2 had already been close political and ceremonial allies in pre-colonial times. Even if fission and conflict was not uncommon between the various segments within the alliance, they held together against common adversaries amongst whom they reckoned, inter alia, the people of Wohimbil. Wohimbil itself had close ties to Selni and Bombossilme, which today goes under the name Hambini 3. Whether the colonial administration was aware of this alliance pattern I do not know. According to some of the older informants, the rift between the two village halves actually became more perceptible and marked only after the partition by the administration.

The colonial administration also introduced a new political order in the villages by appointing certain individuals as government officials. These were the luluai and tultul. In certain areas paramount luluai, the so-called wetpus, were also appointed. It was through these officials that nearly all the administrative dealings were conducted. The luluai functioned as the village representative and, together with the tultul, he was responsible for seeing that the kiap's orders were carried out and that the new standards of order and cleanliness were upheld.

The appointed village leaders had an ambiguous status in terms of the authority they exercised. There has been some controversy in the literature concerning the status of luluai and tultul in the villages. In some cases, luluai and tultul are described as powerful men in traditional terms, who used their link to the colonial administration to further boost their authority and status. In other cases the real bigmen appear to have kept in the background and put forth less prominent men, as buffers between themselves and the colonial administration (Rowley 1972:83-86; Jinks et al. 1973:256). In Warengeme it was a bit of both.

Warengeme was exceptionally well equipped with appointed leaders. Apart from a luluai, two tultul, a medical tultul, who, however, was of no political significance, the village also had a wetpus, i.e. a paramount luluai, who was responsible for the Wam, Muhiang, and Bumbita areas. As Lucy Mair herself notes, the role of these paramount luluai remains somewhat unclear: "They exercised authority, of a nature, not clearly defined, over groups of villages. Some of them presided over informal courts in which they, with the village luluais, were reported to adjust minor matters and local questions which are not sufficiently serious to bring before the Court of Native Affairs" (Mair 1970:74).

The person appointed wetpus after the war for the area denoted was a man called Mahite Butehe of the *petule* line of Warengeme ward. It appears that the authority he enjoyed was a result of his official function and status in the colonial system, whereas in the traditional system he remained a rather inconspicuous figure. The same applies to the luluai of the time, a man called Mahishu from the Womsok lineage of Wohimbil. Before the war he had been a tultul and was appointed luluai after Mahite Butehe became wetpus.

Apart from his official position, which granted him a certain degree of power, Mahishu had the reputation of being the head of a group of *arukwineme* sorcerers, which earned him a certain degree of awe and respect, but in many respects he is said to have been dwarfed by his brother Happali, the effective bigman of Wohimbil at the time and the father of one group of men of influence of Warengeme 1 at present.

Because of its size, Warengeme had two tultul after the war, one for Warengeme 1 and one for Warengeme 2. Landihi, the tultul for Warengeme 2, was a prominent man in the traditional system, but he was only of secondary importance in the cast of appointed village leaders where he faced a triumvirate of Warengeme 1 officials. This partially changed when Landihi became the first elected councillor of Warengeme when the Local Government Council system was introduced in 1966. He was, in fact, the first appointed leader ever elected from Warengeme 2, all the others, going back to the installation of administrative control, had been from Warengeme 1. Only one other man from the lower half of the village has since then held an official position. This was Landihi's (adopted) son Saasie who was councillor between 1980 and 1984. Otherwise Warengeme 1 has provided all the village officials, including the powerful village magistrate. In 1984 Saasie lost the council election to Gista Happali, the eldest son of the former bigman of Wohimbil, and so the position moved back to Warengeme 1.

The village court system was introduced in 1975 (Paliwala 1982:191) and since then the position of the village magistrate has been held by a man called Hiale Wabihei from the ward of Warengeme. Hiale is rated as one of the last of the customary bigmen. His influence partly stems from his position in the traditional ceremonial system, partly from his official role. Generally, the village magistrate holds an exceptionally important and powerful position. All the village disputes which do not transcend a certain degree of gravity (i.e. mainly serious criminal offences, large land disputes) are brought before the village magistrate to pass judgement on, either within a formal court procedure or in the shape of a mediation. Although the magistrate is bound by an official legal code, his task of weighing contradicting claims and coming to a verdict involves a high degree of evaluation and interpretation on his own part, and thus he holds a central position in making decisions and laying down the course of events. He thus shapes the domain which, in former times, actually constituted the essence of political activity, that is the process of regulating social relations between individuals and groups, and maintaining a balance of interests and power. In the eyes of the villagers, the magistrate not only represents the law, he is the law, and for the process of village politics his position is as significant as that of the councillor. In Warengeme, this is especially the case since the position of the village magistrate has been in the hands of the same person for such a long time.

Warengeme is exceptional in another sense as well. Ever since the system of provincial government was introduced in 1978, the Wam-Urat constituency has been represented by a man from Warengeme. The first man to be elected was Kani Happali from Wohimbil ward, the second son of the earlier bigman Happali, and the brother of the present councillor Gista. He held this position for nine years until 1987. He reached his political peak when he was elected as Speaker of Parliament in 1986. Although he was generally

oriented to and involved in wider political issues, his position also lent him prominence and granted him influence in internal village matters.

From the distribution of official office holders it becomes evident that Warengeme 1 has always been dominant in the field of "government" politics, whereas Warengeme 2 has always taken the lead in economic innovation and cash cropping. All the collective ventures in the village, the early cooperative movement, the bisnis groups and, more recently, the youth groups have had their origin in Warengeme 2. The pattern, I believe, is not coincidental. It indicates that each village half took possession of a specific domain of the encapsulating system and tried to exploit it to its own benefit in the struggle for supremacy in the village. Warengeme 1, and especially Wohimbil ward with its large number of immigrant lineages, saw in the colonial establishment a useful ally and a source of power which they hoped to tap and occupy for themselves in order to offset the balance with the occupants of Wolhete and Talkeneme, who had the advantage on their side of being the original settlers and landowners in the village. This is one instance where it becomes evident how the properties of the colonial system took effect on the indigenous power system. The fragile balance was upset when in 1987 a man from Warengeme 2 challenged Kani Happali in the provincial elections and won the seat from him. His name is Alex Anisi and I shall be dealing with his person and the role he played in the village in more detail below.

ECONOMIC CHANGE

The channels for economic change were opened by labour recruiting. Around 1910 the first labour recruiters appeared in the Wam area, coming from the north. They were, according to the villagers, Germans, together with their Malay and Chinese helpers. The more northern Wam 1 villages first came into contact with them. The change in colonial rule from Germans to Australians altered little, or nothing at all, for the villagers in terms of labour recruiting. The flow of labour migration continued, and even grew in volume over the next years and decades. The destinations of the labour migration were the copra plantations situated on the northern coast of New Guinea and the islands of the Bismarck Archipelago.

In the early 1930s, the Oil Search Limited company began its operations in the area (cf. Stanley 1934). The company did what its name implies: looked for oil resources. It had its headquarters in Matepau on the coast. It was from there that their men began surveying and mapping large areas between the coast and the Sepik River. The Wam area became one of the principal recruiting areas. Two names connected with the Oil Search Limited are G. Stanley and H. D. Eve, the company's geologists and chief surveyors, better known in the area under their Tok Pisin names of Masta Senni and Masta Eip. A large number of village men, now well in their seventies, worked for the company and accompanied its surveyors on their expeditions into what is now the Sandaun Province, as far as Amanab and Green River. Wahute, the initiator of the Kirap-Kirap Movement (cf. chapter 15), also worked for the company; it was through observing the work of surveying that he became

convinced that the white men were looking for the Golden Rings, according to him the source of all material wealth.

The war naturally stopped all economic activities in the area. After the Australians had gained control again after 1945, labour recruiting was resumed. Until after the war, money played no significant role in the village itself. The wages that were earned during the contract periods on the plantations were usually converted into trade goods at the end of the term, ironically, often in the plantation-owned trade-stores, so that a lot of the labour costs were recycled back into the plantation owner's hands. Money at the time was still not utilizable or convertible in the village. Still, it seems that some money did find its way into the village, where it was kept. This was soon to change.

The war had, it goes without saying, a cataclysmic impact on village life, and it brought noticeable changes to the area. It partly altered the New Guineans' perception of the Australians as a colonial power. On the other hand, it also changed the Australians' attitude towards New Guinea and its inhabitants to some degree. In view of the changes colonialism faced globally after the war, Australia began thinking more seriously about New Guinea's future. On many occasions during the war, the Australians had come to rely heavily on the New Guinea villagers, and not only did New Guineans come to learn the Australians from a different side, they often took over new functions and responsibilities. Others, who were left stranded on plantations and away from their villages at the time of the Japanese invasion, had similar experiences with the Japanese, at least as long as the relations between Japanese and New Guineans remained good, i.e. until they came under pressure at the time of the Australian reinvasion.

The postwar years in the Dreikikir area saw the emergence of a group of indigenous innovators who were to bring fundamental changes to the way of life in the villages. These were the first so called bisnis lida, i.e. business leaders. These were the men who initiated economic change by introducing cash crops and starting up the cooperative movement (Shand & Straatmans 1974, Allen 1976). It is no coincidence that this group of innovators was composed largely of men who had been absent from their villages for many years, and had been directly engaged in the colonial system in some form or another. Pita Simogun from Dagua, Augen (Supari), and Kokomo Ulia (Eimul) had been in the police force before the war and had fought on the allied side during the war. Two others, Anton Misiyaiyai (Moseng) and Wangu Wangu (Warengeme), had been recruited by the Japanese by force at the time of the invasion whilst they were "on station". At the time Wangu was working in Rabaul. It was from the Japanese that Anton learnt how to grow rice which was, not by chance, to become the first cash crop in the area.[1]

I believe it to be highly significant that it was precisely such men that had been absent from their villages for many years who became the principal bisnis leaders and innovators. Wangu, the main innovator for the Wam area in the early years, had left the village at the age of about six. Having been absent for so long, the people did not know or remember him properly when he returned to Warengeme after the war. Neither did he speak the Wam language very well. During his years "on station", where he had been engaged in various types of work, he had acquired many skills and a basic knowledge of such fields as

commercial agriculture, trade and money. The long absence from the village also meant that these men were not so deeply enmeshed in the network of duties, obligations and reciprocities within the kin and the ceremonial systems, which meant that they were not so shackled by the constraints of tradition. They were thus freer to introduce novel ideas and new forms of enterprise.

On the other hand, however, they also faced numerous obstacles and difficulties. The same networks that were often so restrictive and constraining also functioned as support groups, which meant that the bisnis leaders often first had to build up new networks of support. Moreover, they also faced opposition from the traditional bigmen in the village to whom these new ideas and enterprises appeared as a threat to their power which was vested in the complex of the secret male cult, the tamberan. Thirdly, the bisnis leaders saw themselves up against a second group of influential men. These were the appointed village leaders, such as the luluai and tultul and, in the case of Warengeme, a wetpus, i.e. a paramount luluai. The bisnis leaders' greatest asset was the fact that the majority of the population were open to innovation and more than willing to undertake steps towards economic change and alterations to their way of life.

The history of cash cropping and business development in the Dreikikir area has been extremely well documented and analysed by Bryant Allen (1976). I shall therefore not repeat his findings, but concentrate on the Wam area alone, and specifically on Warengeme. Shand and Straatmans (1974) also provide a clear account of the development of cash cropping, although they concentrate more heavily on the Maprik area, and only peripherally touch the Wam region.

In Allen's (1976) account, Kokomo Ulia of Eimul, Augen of Supari, and Anton of Moseng are given the credit of having started cash cropping and bisnis in the area. Among the Wam speakers, Wangu Wangu is described as the prime innovator in the region. Wangu himself strongly asserted his principal role in the development of bisnis, maintaining that the others were only secondary to him. Wangu is however, like many of his fellow Wam, highly susceptible to "mitasolism". It is not for me to decide who held this principal position, suffice it to say therefore, that Wangu was probably more prominent than he is made out to be in Allen's account, and less prominent than he makes himself out to be. But for Warengeme and the Wam area, he certainly was the prime innovator.

According to Wangu[2], bisnis started in the area around 1950, when he began importing salt from the coast and selling it to the people of Warengeme. Where the salt actually came from is a matter of dispute. One of his closest helpers described how he and some others had produced salt by extracting it from sea water (through boiling). Wangu himself said that he bought the salt at a store in Aitape with money borrowed from a senior kinsman. Wangu repeated the procedure several times, until he generated enough capital to buy a variety of goods (knives, soap, tinned meat, tobacco, paper, rice) with which he opened a store in his hamlet of Gulime. A patrol report of 1951 speaks of Wangu and his store in the following way: "The group is proud of their 'business man' at Waringame, who is operating a well stocked trade-store, retailing at reasonable prices" (Doolan 1950:2).

Wangu's store did not only meet with wide acceptance. Some villagers described how suspicious they were of Wangu's enterprise and felt that he was "stealing" their money. They reported him to the local kiap who came to investigate but he found nothing wrong with the store. The opposition that arose was not necessarily self-generated. Behind it stood the group of appointed village leaders, the luluai, the tultul and the wetpus. The fact that opposition arose from this quarter is no coincidence. It reflects a conflict pattern in the village that we come across regularly during the first years of bisnis development mirroring a deeper lying contention between the various village factions and segments, which persists to this day.

It was the connections to the outside system that the appointed village leaders tried to activate in their attempt to hinder Wangu Wangu in his business enterprises. Shortly after their complaint about Wangu's store had been rejected, Wangu diversified his bisnis activities and began operating as a subcontractor for a labour recruiter. His recruiting expeditions took him far into the Sandaun Province. According to Wangu, the contacts he made in the various villages whilst recruiting labour came in useful when he later initiated cash cropping and the cooperative movement. A second attempt to impede the growth of Wangu's influence, and that of the lower two wards from where Wangu drew most of his support, was made when rice growing started a few years later. Again it was the appointed leaders from Warengeme 1 who reported suspicious bisnis activities to the authorities in Dreikikir. This time it was in connection with the collection of fees for the founding of the Rural Progress Societies.[3] Both the appointed village leaders and, for reasons of their own, the field officers of the local administration were highly sceptical towards these new cooperative movements. The village leaders again saw a threat to their position rising on the horizon, and the kiaps, ever wary of native collective enterprise, suspected the beginning of a new form of cargo cult. An inquiry was held in Dreikikir (1954) which was attended by all parties involved, that is the kiaps, the senior administration officers from Maprik and Wewak, the bisnis leaders of the area and the local luluai, tultul and wetpus. In the course of the inquiry, a remarkable alliance gradually formed: whereas the younger and lower-ranking field officers sided with the appointed local leaders, the higher echelons of the administration were in support of the bisnis leaders. Allen (1976:199-200) puts this down to the inexperience of the field officers who, following what they had been taught at the administration college, believed that any form of native collective enterprise was a mask for a cargo cult and, therefore, a form of anti-colonial activity which had to be stopped immediately. The higher-ranking administration officers, usually more senior and experienced, on the other hand, had more insight into Australian development policies at the time and realized that the future of the Territory of New Guinea lay in cash crops and in the development of indigenous commercial enterprise.

During the inquiry, Wangu, according to his own statement, accused the village leaders and Australian field officers of never having taught the villages anything about development and bisnis, but only of having chastised them and lectured to them on cleanliness and order. Suggestively, he called the village leaders luluai bilong matmat, that is "cemetery luluai", intimating that they were only concerned about matters of cleanliness

in the village cemetery, but also, with a deeper meaning, that they cared more about the past and the dead than they did for the living and the future.

With the support of the higher-ranking officials, the bisnis leaders won the day. Rice growing continued and the Rural Progress Societies proliferated. At the time, only two men from Warengeme had joined the Supari Society. Others were to join later. On this occasion, or possibly shortly afterwards, it remains unclear which, Mahite Butehe either resigned as wetpus, or else his position was abolished. He, anyway, fades from the scene. Mahishu was left as luluai with his two tultul.

Shortly afterwards, Wangu suffered the typical fate of all successful leaders: he was threatened with sorcery. After his first wife and one of his children died, Wangu left the village and moved to a place called Seveneka, an area which belonged to the Muhiang Arapesh village of Albineme, and to a man there called Nalowas, who also belonged to the group of early entrepreneurs in the area.[4] His influence as a bisnis leader, however, did not cease or suffer because of his residential move.

Rice growing spread through the area widely, but it never really became the commercial success people had hoped it would be. There are many reasons for this, the most important being that the revenue earned did not justify the input of labour, time, and energy. Rice growing was arduous, and so were the marketing and transport. Even if rice growing itself was not a success, it was an important experience in cash cropping that prepared the way for the crop that came to substitute rice, namely coffee. Coffee has proved extremely successful and today is still the main cash crop of the area.

Coffee was initiated through a DASF[5] extension programme, but its proliferation was largely carried and promoted by those bisnis leaders who had already introduced the rice scheme. Wangu strongly encouraged the people to convert some of their food gardens into coffee gardens and plant 500 trees per household, which is a target that several families have not even reached today. How strong this encouragement was and what form it took, I do not know for sure, but once again it incited the opposition of the appointed village leaders under the luluai Mahishu, who, once again, accused Wangu of leading the people astray. It appears that the pace of innovation was too fast for a traditionalist like Mahishu. "Em i laik winim gen", he wanted to beat me again, was the way Wangu commented on Mahishu's opposition. But this time the luluai went to jail for six months for slander and spreading false rumours. He was accompanied by his *pinandil*, a man called Mahite Salmbehe, also from Wohimbil, who later was to become one of the prominent figures in the Peli Movement.

The sixties were the decade of rapid coffee expansion. At first, attempts were made to lay out village or community plantations, i.e. collectively-owned gardens, but these attempts were soon given up again, following disputes about land ownership, the division of labour, and the distribution of revenue. Individual, or nuclear-family-owned gardens became, and still are, the norm. In the early stages, the coffee was processed by hand. The dried parchment was carried down to the vehicle track that led from Dreikikir to Maprik and sold there. A little later the first hand-pulpers were provided by the DASF and bought on a hire-purchase basis by groups of villagers. Such groups were formed by people who

had adjacent coffee gardens, or used the same sites at streams for processing their coffee. This is still the common pattern today.

By 1962, 1'284 coffee trees had been planted in the Wam area, and by 1964 there were 66'321. This was the highest score for the whole Maprik District. In 1968, the number had risen to 86,230 (Shand and Straatmans 1974:116), and by 1971 it had doubled to 171'000, which meant an average of 232 trees per male grower, and was the highest score in the Dreikikir Subdistrict. The Wam area in total produced 57'000 kilos of coffee in the 1970/71 season (Allen 1976:211).

Warengeme with a population of 569 produced 9'834 kilos in 1971. Hambini with only a population of 383 produced 10'000 kilos, and the two considerably smaller and more isolated villages of Selni and Selnau (353/275) sold 7'650 kilos (Allen, personal data). This is an indication that for some unknown reason, Warengeme was producing under its capacity. At the beginning of the 70s rice was still being grown in the area. In 1971 two rice projects were still proceeding in Warengeme, producing 2'250 kilos and generating a revenue of 147A$. In comparison, the 9'834 kilos of coffee earned 3'340 A$. In other villages of the Dreikikir area, rice production was still very much higher. Hambini for instance sold 10'000 kilos which earned 636 A$. Some Urat and Gawanga villages were producing more than 20'000 kilos. In the long run, however, rice could not compete with coffee, and production gradually petered out (Allen, personal data).

Coffee production continued to grow throughout the seventies and into the eighties. Setbacks in production figures are an indication of the people's reaction to price fluctuations on the coffee market. Thus, for instance, in 1984 the coffee yield in Warengeme was down to 15'000 kilos, a mere 500 kilos more than thirteen years earlier. This was a clear reaction to the low coffee price in the season and months preceding the 1984 harvest. In 1983 the coffee price fell to a minimum of 50 Toea per kilo, which was less than half of what the people had been earning at the beginning of the decade. During the 1984 season, the price rose again to 70t, and then to 80t. It had no immediate effect on the production figures, but it meant that the villagers would be encouraged to harvest more the next season. With an average price of 85t, Warengeme produced 26'000 kilos in 1985, which yielded a total income of 18'200 Kina. The next year 1986, with the price stable, the yield was approximately 30'000 kilos, which generated a total village income of 21'000 Kina.

Over the last ten years, the people have begun planting cacao as an alternative crop to coffee. In 1987 the harvest was still very small and many people were still apprehensive about the new crop and undecided whether to expand their coffee gardens, or to invest in cacao.[6] However, coffee is, and remains, the foundation of all bisnis and forms the basis of the monetary sector of the economy. It is the second pillar of the Wam economy, besides subsistence production. It generates by far the greatest part of the total village income, other sources being negligible. There is practically no revenue from urban wage income as is, for instance, reported from Manus (cf. Carrier 1984) and there is no trucking business left in the village. Other sources of income, like trade-stores or the occasional sale of a pig, create an internal village redistribution but no cash inflow from outside.

On the other hand, coffee on an individual basis has its limits of growth as well. And the people are very much aware of this. A man together with his family can work only a limited acreage. The bigger the family, the more coffee gardens he can establish, but then land availability, and the question of allotting land between subsistence and coffee gardens becomes problematical. Through government encouragement and the work of the local branch of the Coffee Development Agency (CDA), the people have learnt that they can increase their yield through better garden management, but this too, the villagers feel, will make only a partial improvement.

RELIGIOUS CHANGE

The first contact the Wam made with Christianity goes back to before the Second World War, when the Catholic Mission[7], operating from Ulau on the coast under Father Kunisch, entered the Wam area in the 1930s and established a small chapel in the village, in the hamlet of Tillenge. A second chapel was built in the neighbouring village of Woreli. It was run by a catechist from the Ulau area, called Tengare. Occasionally, Father Kunisch visited the village to hold mass. He is remembered by the older villagers as being an extremely short and round man. During the week, the children went to school and were taught to read and write. The venture came to an abrupt end when some villagers, angered by the frequent beatings their children received from the catechist, drove Tengare out of the village and demolished the haus lotu (church).

After the war, the Catholic Church re-established itself in the area. It built a mission station in Dreikikir in 1950, some ten kilometres west of Warengeme as the crow flies. The South Seas Evangelical Church (then still SSEM, for Mission) opened various mission stations south of the Wam area, in Balif, Ilahita, and then in Brugam, which today is still the main centre in the area. Their domain of influence reached as far as Woreli and Bana, whereas Warengeme, following a gentleman's agreement between the two missions, remained Catholic territory. In recent years the SSEC has begun to expand more, and a number of Warengemes joined the SSEC branch in Bana during the eighties. In 1988 they were considering building a church of their own in Wolhete, but this met with opposition from the predominantly Catholic parishioners of Warengeme 2, who maintained that there was no room for an additional church in the village, besides the Catholic and the New Apostolic Church.

In 1970, the Catholic Mission opened a new station in the Wam area, which carries the name Aresili but which is located on Warengeme territory. The station was built up by the first resident priest, Father Karl Heintges, together with the villagers of Warengeme. No other village helped at the time, the Warengeme say. The driving force behind the village support was the above-mentioned bigman Happali from Wohimbil, who was able to convince the others that if they did not lend their support, the mission would go somewhere else, and the village would lose out on a singular opportunity of development. Father Heintges' commitment to his parish went far beyond his religious task. He initiated numerous small development projects which flourished as long as he was present. Many of the villagers look back on this time as a kind of "golden era". The village stood behind the

church and its priest. The period was characterized by optimism: independence was approaching, cash cropping was expanding, and development and change as a whole, seemed to be striding ahead. In addition, the Peli Movement, which spread through the area at the beginning of the seventies gave rise to hopes for radical and immediate change in many villages. The movement, the people still maintain today, was not directed against the Catholic Church.

The "golden era" did not last for long. Father Heintges left the Aresili station after six years, to the great disappointment of the villagers. They had to come to terms with a new situation. One problem was that Father Heintges had not only shown them how gradual development could be achieved in small steps, he had also disproportionately raised the people's expectations as regards his successors, and they consequently were measured against his work and his popularity. The resident priest during the fieldwork period, Father Waldemar Weniger, was equally committed to his parish but he took a different view of his role as an agent of change. Unlike Father Heintges, who took matters into his own hands and started, and operated, many projects *for* the people, Father Waldemar placed more emphasis on the idea of self-reliance on the part of his parish. He was there to help, guide, and instruct, but it was the villagers themselves who had to develop the ideas and take the initiative, and learn to take over the responsibility for their own activities. This, naturally, is a slow process, and usually there are as many setbacks as there are successes. Numerous villagers interpreted the priest's standpoint as indifference towards the village and complained of the growing neglect they were being shown. One result of this process is the increasing influence of the New Apostolic Church in the area in general, and in Warengeme in particular. Although the Catholic Church is still firmly based in the village it has received competition from the NAC in recent years. I shall be dealing with the NAC at full length later on.

The proliferation of a new belief system has not only made substantial changes to the way people perceive the cosmic order and their position within this order, and initiated an intellectual process of dismantling traditional beliefs concerning the nature of things and the matter of nature, it has, increasingly, also altered their perception of human society and the foundations of social relations. More specifically, Christian teaching has provided them with a blueprint of how human relations should be ordered, and how the people should behave towards each other in these modern times.

The churches have also made their influence felt in a different, and unintended, sense. The churches do not only cater for spiritual guidance and teach the people how to live righteously and in accordance with the laws of God, they also represent a crucial factor, and play a significant role, in the field of village politics. The churches, in particular the Catholic Church, establish positions for individuals in their clerical organization. In the village setting these clerical positions acquire a very political dimension. The men who occupy them play an important role in the ongoing contest between the various village factions about the correct "road of development". Moreover, they frequently try to exploit their positions for their own purposes, and in order to extend their own sphere of influence and boost their own personal status. The significance, and influence, of these positions has

gradually increased over the years due to the shift in church policy and the growing emphasis on self-reliance which entails a stronger leverage for such members of the parish as are actively engaged in church affairs. In particular, these include the catechist, pastoral workers, prayer leaders, or youth leaders, and the members on the parish board. Often these are the same people.

In effect, church leaders hold only a very limited degree of power and they are, generally, not in a position to make decisions. They cannot convene meetings, or hold mediations, nor can they make demands on others on the strength of their position, or command people to do things, except, maybe, in the narrow confines of their actual field of action, i.e. in the church. But where they do come into the public eye is in the context of public meetings and disputes and in terms of rhetorical performances, usually at the side of one of the prominent village leaders or bigmen. With notable exceptions, the church leaders of Warengeme were all younger, ambitious men in quest of seeking niches higher up in the political ranking order of the village. Although there can be no doubt that their engagement in the church was sincere, it cannot be overlooked that the churches, at the same time, provided convenient stepping stones in their political career. It is during the large-scale village meetings and disputes that they are able to make their presence felt and assert themselves. They can profess that they are not acting out of self-interest and personal gain, but speaking on behalf of the churches. On the strength of their claim to represent the churches and, therefore, in a wider sense, the moral conscience of the community, they can legitimize their performance and do not have to hold back with their views on, and reproaches for, their fellow villagers. In this way, church leaders often try to exploit the position they hold in order to bypass the codes of the ethos of equality and place themselves above their fellow men, well knowing that it is nearly impossible for their opposites to counter the reprimands because the speaker is nominally acting in the interests of the moral well-being of the village.

EDUCATIONAL CHANGE

I now turn to the third force of change, education and schooling. Before the Aresili Community School was built at the beginning of the seventies, there were very few educational opportunities available to the village. The first school built in Warengeme was a Tok Pisin school which was established in 1958 in the hamlet of Tamame. The local children were taught reading and writing by a number of men who had received their basic education through the Catholic Mission in earlier years. Amongst them was a man from Selni who had been taken to Ulau before the war by Father Kunisch and trained as a catechist. The school carried on for seven years but then finally had to close down. For a short period some of the young boys of Warengeme – no girls – went to Dreikikir to school at the Catholic Mission. But this was only a short interlude which came to an end after a whole group of boys were expelled from school for stealing chickens from the priest.

One other alternative open to parents wishing to give their children an education at the time was to send them away to one of the boarding schools, which were run by either the

missions or the administration. Not many parents appear to have taken advantage of this possibility. It is significant that five of the six most influential men in the village today, men who are ranked as village leaders, were able to take this opportunity and received a primary and secondary education during these early years, away from the village. Moreover, after finishing school they did not immediately return home but remained away and entered the employment sector of the economy, either in the administration in one form or another (agricultural officer, teacher), or else in the private sector.

During the sixties and early seventies this was still possible, and a secondary school qualification was still sufficient with which to acquire an occupation in the employment sector. Today, this has changed radically and even a grade ten certificate is no longer a guarantee of a salaried job, even at the lower end of the occupational ladder. One of the reasons for this is, that through the spread of education and the proliferation of schooling facilities throughout the country, the number of secondary school leavers is rapidly increasing and the supply of labour entering the market is growing at a faster rate than the national economy can absorb. Back in the village, the people are aware of this changing situation and are forced to accept that education no longer automatically leads to employment and a regular income, although, in general, they still hold the view that the main task of formal education is to prepare young people for a salaried job in the wage sector. They find it hard to accommodate to the idea that schooling today, at least at the lower levels, is intended as a preparation for life in the village. Nevertheless, they still regard the schools and education as one of the more vital aspects of the development process and, without specifying exactly in what way, they believe it will contribute to the modernization and transformation of the village setting. Consequently they still send their children to school, both boys and girls.

The Aresili Community School is located next to the mission station. It caters for all the Wam villages. It has between five and seven classes, depending on the number of pupils each year, and this in turn determines how many teachers are employed per term. The majority of children complete the full six years of primary education. However, the dropout rate is higher for the more distant villages such as Selnau, Tumambe and Bengil and it is generally higher for girls than for boys. This is because parents often do not regard it as an absolute necessity for girls to have six years of education, and because girls are needed for work in the gardens and in the domestic sphere.

In the ongoing discourse on development, schooling and education is one of the central themes. It comes next to the issue of cash cropping and the question of "law and order" and is no less important than the topic of the churches. The people value the fact that they have a school in their immediate vicinity and acknowledge that they are more fortunate than many other villages but, at the same time, the school is the cause of much trouble and frustration. This stems mainly from the fact that in recent years only a very small number of pupils have passed the final grade six examination and have received the chance to go on to secondary education. Thus, in a way, the school is seen as not fulfilling the task it is there for. The largest part of the blame for this deficiency is laid on the teaching staff. As a rule, the teachers come from other parts of the province or even other provinces and during

term they live in at the school, occasionally with their families. They enjoy an ambiguous status. They are important change agents. Often they engage themselves in village activities (such as sports) and entertain good relationships with the villagers, especially with the younger generation. On the other hand, they evoke much discontent and are the cause of much dissent because the parents feel that they are not taking their jobs seriously whilst they are being paid high salaries all the same. In this sense, teachers often personify the negative image of the public servant and are regarded as typical representatives of the encapsulating system, who live off the villagers. They profess their concern and a feeling of responsibility for the villagers in the development process, but in actual fact they are only concerned about their own benefits. Because of the high rate of absenteeism during term the quality of teaching suffers and it is for this reason that the pupils fail in their finals. In the course of the sometimes heated disputes that arise during council or P & C (Parents and Citizens) meetings they are also accused of organizing and subsidizing the regular drinking bouts during and after patis with some of the bigmen of the village, and of becoming involved with their female pupils. The teachers, for their part, complain that they receive little or no support from the villagers in such matters as the maintenance of their houses or the procurement of food, which means that they regularly have to return to their home village to fetch supplies, or buy food in Maprik. An increasingly important point they make is that they no longer feel safe on the school premises in face of the growing prevalence of crime in the village and that they frequently receive anonymous threats, either of physical attacks or of sorcery. On one occasion, after the house of one teacher had been bombarded with stones at night and another of the teachers had received a note containing the words yu save long ol Wam (you know the Wam), which was a hint at the Wam people's notoriety as sorcerers, the teachers demanded that watchmen should be posted around the school at night. Under these conditions, the teachers maintained, their frequent absence was understandable.

In this way, accusations are banded back and forth and conflict tends to spiral and proliferate. The parents reproach the teachers for their lack of commitment, the teachers claim that the villagers are not willing to provide the necessary conditions for them to work in, and that "law and order" in the village is breaking down. On this latter point the villagers are likely to readily agree. They see the village increasingly threatened by the activities of gangs of raskols (criminals), and pass on the blame for the deteriorating situation to the village leaders, who should be responsible for the safety of Warengeme and for keeping peace in the village. They in turn point out that they can do nothing because the villagers show no willingness to cooperate and flout all their attempts to bring changes to the village, and accuse the people of still adhering to the habits of kastom, and of being racked with jealousy and strife. Such an accusation is liable to elicit the response that the village leaders are not only incompetent and failing to perform their duties correctly but, actually, are only seeking personal profit from their position and prestige for themselves. In this manner external problems are translated into internal conflicts and provide fuel for the ongoing quarrels between the various factions in Warengeme.

NOTES:

[1] In appendix C of his thesis, Allen (1976) includes the personal narratives of some of these business leaders of the area.

[2] At the time of research Wangu was a man well into his eighties, pushing ninety. Both physically and mentally he was in fine health.

[3] The Rural Progress Societies were the early cooperatives in the Maprik District. They were founded, and led by, the indigenous business leaders with the aim of organizing and promoting the production and marketing of rice. There were a number of such societies in the Maprik District. The villages of the Wam and Urat areas were grouped together in the Supari Rural Progress Society.

[4] Wangu resided there until his death in 1994, his sons and their families still live there.

[5] Department of Agriculture, Stock and Fisheries

[6] The latest cash crop to be introduced in the area was vanilla i n the early nineties.

[7] The Catholic Mission in the East Sepik Province is represented by the SVD missionary society. SVD stands for Societas Verbi Divini.

CHAPTER TEN
ON LAND AND PEOPLE

Land (*tuhalmbe*) has always been regarded as one of the most valuable and coveted resources, and breaches of land rights almost invariably evoked retaliation, very often in the form of *arukwineme* sorcery. Nevertheless, the land-holding system displayed a high degree of flexibility. Frequently, land was given away in exchange for other valuables such as pigs or shell rings, or in the context of marriage transactions, and kinsmen and kawas granted each other liberal usufructory rights, well knowing that after one or two seasons the tract of land would return to fallow and the user's right would lapse, without the relations of property being contested.

Under the impact of cash cropping, land as a basic resource has undergone a process of revaluation, and today it is regarded primarily as a capital asset generating revenue through the production of coffee or cacao. Kinsmen and friends still lend each other tracts of land but, invariably, they make it explicit that it is for subsistence use only. Coffee and cacao are both perennial crops and, if properly cared for and maintained, trees can go on producing yields for thirty years and more. Even if these figures are not quite attained under the circumstances of production in the villages, it is evident that both types of cash crop tie down a piece of land for many years. A person lending out land for cash crop production would, consequently, be forfeiting the use of that tract of land for a long time. This, of course, is usually not in the landowner's interest; moreover, he would be risking the loss of his land for good since such long term rights of usage often tend to blend into property claims and it is difficult to have someone evicted after such a long period. The villagers are highly conscious of this and it follows that land is not lent out for cash crop purposes.

The supply of land in Warengeme is limited. The village is located in a quite densely populated area and on neither side are there vast expanses of virgin forest. The whole territory is under claim of ownership from one party or another. At the same time the population of Warengeme is growing at a considerable rate. These two facts have not gone unnoticed by the Wam. On the contrary, they are highly aware that they are growing in numbers and that the supply of land is remaining constant, which, in effect, means that the acreage per head is slowly but progressively diminishing. After a land dispute in the village, one of the villagers commented to the kiap: "Tude mipela growim planti pipol, na mipela sot long graun" ("Today we are growing many people and we are short of land"). To speak of land shortage in Warengeme at the present stage would be an exaggeration, but the above statement reflects the villagers' awareness of the problem. They realize that if the population keeps on growing and they continue to increase cash crop production and extend the acreage under coffee and/or cacao, as they have been doing in the last few decades, they will be facing a resource constriction in the nearer future.

But there is no indication of a slowing down of either of the two processes. In response to the fluctuation in the coffee price, many of the villagers have begun to grow cacao to supplement their coffee gardens. Also, the people clearly recognize that the present-day

families are distinctly larger than those of previous generations. The women not only give birth more frequently than in earlier days; what is demographically more significant is that the rate of infant and childhood mortality has declined sharply over the last few decades. In addition, the people maintain, there has been a basic reorientation in cultural values, in the sense that, whereas in traditional times men and women were more absorbed in the production of large food supplies and the raising of pigs, today raising large families has attained an intrinsic value.

A further factor one has to take into consideration when looking at the question of land and the land-holding system is the overall changing view on kinship and family within Wam society. Under the influence of the missions and education and the general influx of Western ideas and concepts, but also under the impact of the gradual erosion of traditional social mechanisms such as formal exchange, the people's perception of their social universe and the different categories of kin is in an incipient stage of change. How lasting or how fundamental these changes will prove to be in the end I am unable to say at the moment. In the main, this change refers to a slow but gradual deconstruction of the two-section kin system and, simultaneously, a growing emphasis and reliance on the nuclear family and the unilineal, i.e. patrilineal, mode of descent reckoning. Principally, this means that there is a growing tendency to question the validity of the system of classificatory kinship and to emphasize more pointedly the biological foundation of the family structure. Not the elder generation but the younger people are beginning, albeit very slowly, to differentiate between kin categories which were previously classified jointly. Thus, father's brother is no longer classified in the same category as father (*agel*) but distinguished as "uncle", similarly mother's sister is no longer addressed as *ni* but designated as "auntie". Notably, there are no indigenous terms for this new class of "parallel" uncles and aunts, nor are they equated with the traditional category of *agel anheil* or *hauneil* and *ni ananei*. In the same manner, all classificatory siblings – the sons and daughters of people traditionally classified as *agel* and *ni* – are redefined and acquire the status of "cousins". The terms *nauwie* (B) and *numandi* (Z) are reserved for biological brothers and sisters, just as *ni* and *agel* exclusively refer to one's genitor and genetrix. The principle of patrilineal descent, however, is not questioned. On the contrary, through the erosion of formal exchange the link to cross kin is being weakened and alternative modes of reckoning (e.g. through the mother's patriline, or the father's mother's patriline) are being discarded. The system is losing its flexibility and the Wam are becoming more patrilineal in the strict sense of the term. Whereas, in earlier times, patrilinearity served as an ideological theme on which social practice played its variations, the model itself is becoming increasingly the only viable mode of kin reckoning.

Parallel to this, and on the "other" side of the kinship system, I observed that more and more often younger people no longer regarded immediate cross kin – MBD and FZD from the male, and MBS and FZS from the female point of view – as marriageable. They were looked upon as being too close for marriage and now fell into the category of wan blut (same blood) relatives. The rule of exogamy applies to them. This means that young men and women today have to look for marriage partners from more "distant" segments of the

cross-kin section. However, the process does not operate in the opposite direction, by which I mean that the classificatory-siblings-turned-cousins referred to above still remain within the exogamic boundary in spite of their change in kin status. Admittedly, these are still very incipient tendencies. In the general flow of social process and everyday dealings the traditional habitus and mode of classification are still in operation. All the same, the above-mentioned indications suggest that there could be a fundamental change to the kinship system setting in, in which the circle of fully recognized and meaningful kin is scaled down to a narrow range based on the nuclear family and strict patrifiliation.

In terms of the system of landownership, and under the impact of cash cropping and the realization that the supply of land is diminishing, this tendency is already becoming marked and showing effects. This is manifested by the fact that a process has set in over the last few years, in which landowners have begun securing and endorsing their land claims, and marking off their estate in order to be in a position to supply their male descendants with sufficient land for cash cropping in the future. As one man put it explicitly, "my four sons are nearly grown up and will marry soon, then they will come to me and ask me to show them where their land is for growing coffee." The ever-growing orientation towards bisnis and cash cropping, and the increasing monetarization of all forms of transaction, is eroding the flexibility of the social system and leading to a gradual rigidification of the land-holding system. More and more often, land is being transmitted in an exclusively patrilineal manner, from fathers to sons to sons. The number of alternative transfers – to cross kin, through name bestowal, or via the channel of the ritual system – is decreasing rapidly.

In turn, this development again is having direct and indirect repercussions on the integrative properties of the social system. Firstly, because land no longer bears its status as an exchange valuable that people bestow on each other in order to create meaningful relationships and strengthen existing bonds. Previously, this was accomplished primarily through the naming system. Today, the ancestral names, the *nalel tuhalmbe*, are being closely safeguarded, and many of the lineages are actually in the process of retrieving names that were conferred in a previous generation (e.g. p. 71ff). Extralineage name bestowal may still be quite common but now, almost exclusively, only insignificant names are given.

Secondly, the rigidification of the land-holding system is seriously affecting the balance of equality because no longer do all segments of the village have equal access to the basic resource land. Those affected most are the villagers belonging to one of the recent immigrant lines. They are increasingly facing land shortage, not in a way that would actually threaten their subsistence basis but certainly in terms of cash crop opportunities. Given the priority of cash cropping and the indispensability of a monetary income, this impediment has a very existential dimension for those concerned. The immigrant lines probably always have had less landed estate at their disposal than others, but in view of the fact that usufructary rights were granted liberally between kinsmen, friends, and kawas, they previously had no difficulty in holding their own and offsetting the balance. Through the revaluation of land as a money-generating resource this, however, has changed. The

"immigrants" do own cash crop gardens, just like all the other villagers, but they have come to realize that in the next generation they will no longer have sufficient land for their sons to keep up with the others.

This vision of a land shortage has led to a process which one could call a general "land grab" or bid for land. It affects all segments of the village but in different ways and to varying degrees. Those with enough land are trying to secure it from takeovers by those who are short of land, those with little land are in search of their rightful property, both within and outside the village territory. This process takes various forms. It includes the investigation of the history of user- and ownership of the individual land tracts – who established a garden on which specific piece of land, at what period, who succeeded whom, and on what basis was the land transferred. Most importantly, it involves the tracing of the ancestral names linked to a specific plot and, by implication, an inquiry into the genealogy and lineage history as a prophylactic measure against take-over attempts. Also, people are making sure that all the ancestral names to which land is attached are in active use. Peripheral territory that has not been used for many years is more liable to be contested than a piece of land where recently a garden has been. In order to forestall any bids, landowners often establish a new garden in such an area – often only a token garden – or build a bush hut just to mark their presence there, and to signal to others that the piece of land has a rightful owner.

Many members of recent immigrant lines – which, it may be noted, make up more than a third of the population – are in a much more difficult situation. They all own land within the Warengeme territory. It was given to their predecessors upon arrival in the village, or purchased through exchange of some form or another in the course of time but, in many cases, it is barely enough to cater for both subsistence and cash crop needs. Moreover, many of them have realized that already their children will no longer have a sufficient resource basis to see them through; others have even now nearly reached their limits. Land within the village territory is no longer purchasable; firstly, because no one is willing to alienate land any longer in view of the mounting pressure, and also, even if someone were willing, no one would be in a position to pay the price demanded.[1] As a consequence many "immigrants" have set out on a quest in search of their place of origin (as ples = root village) in the hope that they will be able to reclaim the land which their ancestors once owned there. This is generically called painim stori in Tok Pisin, i.e. finding one's story/history.

It is not an easy task and the path is proving to be strewn with obstacles. Significantly, this is not a corporate venture, i.e. the lineages concerned do not operate as a group; instead the people set out on the quest on their own, or at most as a group of siblings. Nor are those concerned likely to disclose any information they receive to their lineage siblings for fear that these could appropriate and exploit the information for their own benefit. One of the first and major problems is that most of the immigrant lines actually only have a vague knowledge of where they originally came from. Until recently, this type of knowledge was of no special relevance and, for many of them, ancestral reckoning only began when the original immigrant arrived in Warengeme. They most likely know from

which direction and area they came and, probably, even the name of the present village there but this is not sufficient on which to base a claim to land rights. The claimants must not only be in possession of the name of the original ancestor who emigrated and the name of his natal hamlet, or at least ward, but also that of their *nengele tuhalmbe*, i.e. their apical ancestor, and the early genealogy of their descent line in their place of origin. Moreover, they must also know the lineage totem and the secret name of the resident *sambigile* (bush spirit).

The second, equally serious, impediment is finding informants who not only are in possession of this kind of knowledge but who are willing to part with such highly sensitive information. The most likely source would be in the area of origin itself but there, naturally, the people are usually not inclined to disclose information which might lead to an influx of immigrants and jeopardize their own position. One method, people said, is to exploit ongoing conflicts in the target village and try to coax one party into giving information that would damage the other. But this method can backfire easily and one, of course, can never be sure of the validity of the information received. It is a step-by-step process and usually takes months, or even years. When, if ever, one does reach one's goal, one actually has not got very far yet because any attempt to reclaim original land will certainly be strongly contested by the present title holders. To the best of my knowledge, over the last few years, only one man has succeeded in having his claims endorsed in a foreign village and receiving back his original title. Others are in possession of their stori but have not undertaken any further steps, yet others are still in search of their origins. Given the delicacy of the issue, it is understandable that all the information concerning a person's quest for his stori is regarded as secret and treated very restrictively. He not only has to fear attacks of sorcery from the inhabitants of the area he is trying to reclaim but also must avoid jeopardizing his position in Warengeme itself by giving others, e.g. members of a lineage that originally gave his forefathers land, a pretext for evicting him, with the argument that, since he has now found his place of origin, he is free to go back and should, therefore, give back to them the land he is using in Warengeme.

I gat muvment (there is movement, things are moving) is a common phrase villagers use to describe the mounting unrest caused by the threat of land shortage. Quarrels over land are endemic to the Wam but now land disputes have attained a different quality because, today, many people actually feel threatened in their existence. Not all wards are affected in the same way and to the same degree. This is one area where the rift between the two village halves is felt markedly. The land problem is an issue which troubles the inhabitants of Warengeme 1 distinctly more than it does those of Warengeme 2. This is explainable by the composition and history of the two halves. Wolhete and Talkeneme (making up Warengeme 2) only have one lineage which ranks as a recent immigrant line, all the others are of original, or early immigrant, status. To Warengeme 1, on the other hand, belong four recent immigrant lines and, on top of this, these four belong to the most populous in the village. Of these four, three of them are assigned to Wohimbil, the most recent kastom ples, making this section the actual problem ward.

In Talkeneme, the centre of dissent is located within the *tineme* lineage (lines D1, D2, D3). More precisely, it is an ongoing conflict between the segment D3, the so-called *ereme*, which constitute a recent immigrant line, and D2, the principal *tineme* line, which is supported by its co-lineage D1. Thus, it is a conflict between "immigrants" and the hosts. The quarrel, which has been going on for years with varying intensity, is not only over specific tracts of land to which both parties lay claim but, more to the point, revolves around the possession of ancestral names which provide the key to the contested land. The *tineme* side claims that their adversaries are manipulating their ancestry and have included an important ancestor into their genealogy who actually belongs to the *tineme* line. This, of course, is denied by the other side and, thus, claim is pitted against claim. The two sides have tried to reach a settlement through mediation on numerous occasions but with no success. Since then communication has broken down, and the relationship is marked by avoidance and distrust. At the same time the conflict has moved onto a different level. Here it finds its expression intermittently in sorcery accusations. In the course of time the other segments of Warengeme 2 have gradually been drawn into the conflict as well, with alliances, albeit fragile, forming on either side and resulting in a pattern so very symptomatic of pervasive factionalism.

In Wolhete there is a permanent dispute between the two segments of the *milmbe* lineage (lines K1 and K2) as to who ranks as the original line. Actually, neither of them is really of original status because both were adopted at one stage in time into the original *milmbe* lineage of which, however, there is no living remnant. Today the two lines are carving up the *milmbe* estate, and both are claiming to have priority land rights. It is significant that in both cases in Wolhete and Talkeneme we are dealing with cases of intra-lineage, i.e. agnatic, conflict. The quarrels are between men who stand in a sibling relationship to each other.

In the ward of Warengeme this is no different. Here the problem of land shortage concerns one large lineage, line W2. The majority of its members reside in the oversize hamlet of Butelime. The cramped conditions of residence there are themselves an indication that the inhabitants are short of land. Here, too, we have the setup that the lineage is divided in conflict between a small segment which has command over an abundant supply of land, and a larger one which has hardly any. Until recently, this latter segment was using land provided by their earlier kawas but now these have put a stop to this because they feel a growing need for the land themselves. The Butelime lineage, too, is an immigrant line but, with the exception of one man, they are not in possession of the stori of their place of origin. This man, who, notably, no longer lives in Butelime, is the principal figure of the smaller segment which has sufficient land. In spite of this, he is not willing to part with his knowledge, due to the bitter quarrel which he has had with his lineage mates over the last decade. He is in the advantageous position of having been endowed with the rights to the landed estate of a lineage (W1) which is on the verge of dying out. This is the original *milmbe* lineage of Warengeme ward, which today consists of one ageing bachelor who has no male offspring.

The ward which is clearly most affected by the acute threat of land shortage is Wohimbil. Today eight lineages belong to Wohimbil. Three of these – and by far the most numerous – are recent immigrant lines. They make up over eighty percent of the ward population and, with a few notable exceptions, their members are all facing the same problem. The lines concerned here are P1, R and V. A significant feature they have in common – and which also holds for the Butelime line in Warengeme – is that they do not form part of the MEPTS-system. This is indicative, not only of their foreign origin, but also of their comparatively recent arrival in the village. It also suggests a more shallow degree of integration in the social system in general.

Line P1 originated in the Womsok area. Upon arrival, it received land from line P2, to which it became affiliated, and from line Q, the *enalime* lineage, of which there remains today only one old female remnant with no heirs. Line R, which came from a settlement site called Bunoho in the Womsis area to the north, was granted land rights by the same two donor lineages. In view of the mounting pressure on land, there is growing competition for scarce resources, which has resulted in numerous disputes between the people concerned. Significantly, the most rancorous disputes have again been intra-lineage affairs, mainly between the two sublines of the populous Womsok lineage, whereas relations between the Womsok and the Bunoho lines, which stand in a cross relationship to each other, have been marked by restraint on both sides.

It is only recently that two men of the Womsok lineage began tracing back their ancestry and found their stori of origin in one of the wards of Womsok. Their quest apparently met with surprisingly little resistance on the part of the Womsok residents and since then one of the men has built a house there, as a signifier to his claim. Whether or not he will ever go to reside there the man did not know at the time. What was certain, however, was that it was his personal claim and that only he and his sons had the right to settle there. His lineage siblings, he said, would have to fend for themselves.

Line R, the Bunoho people, have always known their stori and could, they maintain, return to their original settlement any time, since the area today is uninhabited. However, this is precisely the reason why the men of this lineage do not cherish the idea of going back. Bunoho is a remote spot in the bush, with no road access, and the nearest modern facilities, such as the school, church, and aid post, are in Womsis, which is too far away to be of convenience. They prefer to stay in Warengeme and are confident that their claims, especially to the old *enalime* estate, are more valid than those of their rivals.

By far the most seriously affected lineage is line V. Some of its members are at present already in a desperate state in terms of land. It is one of the larger lineages, numbering eleven adult men with their families but, at the same time, it is a highly fragmented entity. In fact, for a long time I did not even realize that they constituted a lineage, believing instead that I was dealing with three separate lines. They never referred to themselves as belonging together, their genealogies were very shallow and did not link up with each other in one of the ascending generations, and there were no other indications, such as a distinct corpus of names, to suggest that they formed a lineage. Some of its members claimed to be the *milmbe* of Wohimbil but this was vehemently denied by the others of the

ward. It was during my second stay that I was able to gather more information on this line. This was possible only because they themselves had shed more light on their stori in between fieldwork periods. One man had gone in quest of tracing their ancestry and, eventually, had found out that their common origin was in Selnaua, an old settlement on the mountain of Aresili, and the original site of the modern village of Selnau. Like others in his position, this man is also disinclined to share the information with his lineage mates. He himself, together with a *meinheil* of his, moved residence a short while ago and established a new hamlet site, halfway between Warengeme and Selnaua (on land belonging to his *meinheil*). He is thus gradually homing in on his place of origin.

Generally it appears that the members of line V and their predecessors were never given as much land on a property basis as the other immigrant groups. Instead they have always had to rely more heavily on borrowed land. This is an indication that they arrived last in Wohimbil. Consequently, they are feeling the effects of the rigidification of the land-holding system more severely than others. With the exception of a fortunate few who have been adopted into other lineages through name bestowal, they are desperately searching for land resources and trying to lay claim to tracts of land in the village where their claims are not even half-valid, or where rumours say that an ancestor once owned land. The large majority of land disputes I witnessed concerned people from Wohimbil, and usually someone from line V was involved.

In many cases land disputes end in a stalemate. The village leaders called in to mediate are not in a position, and do not have the authority, to validate one party's claim over the other's, so that the disputants seldom reach an acceptable solution. As a consequence, the piece of land is "locked", i.e. it is banned from use for either party and the case is passed on to the official District Land Court.[2] These are, however, notoriously overworked. Thus, the issue threatens to be delayed endlessly. Often it takes years until the case finally comes up in court. During this time the conflict in the village smoulders under the surface and, in many cases, it develops according to a very typical pattern. The conflict proliferates and undergoes transformation.

It proliferates in the sense that, firstly, it involves an increasing number and range of participants. These are the kinsmen, friends and neighbours of the principal antagonists who are invariably drawn into the altercation. Secondly, as the social range of conflict extends, the issues in dispute tend to proliferate as well. Many secondary points of dissent, some major, others minor, which intrinsically have nothing to do with the original object of dispute and its personnel, are included. These can be issues like outstanding debts, destruction or misuse of other people's property, incidents of verbal insults, or fights between members of the opposing factions, church matters, or problems concerning the youth group, etc. The proliferation of issues, in turn, is again likely to swell the number of participants. In this way, a broad agenda of pending problems and unresolved quarrels that are occupying a section of a ward, the ward as a whole, or even a larger segment of the village, tend to be linked together and dealt with simultaneously. Land disputes, just like sorcery accusations, tend to be catalysts around which other irregularities in the social process gather and through which they find expression.

One of the effects this kind of proliferation has is that the acute conflict situation centred on a single object of dissent is momentarily defused. The tension is spread out more evenly over a larger field and, thus, the danger that the conflict will climax in a physical encounter is curtailed, at least for the time being. Moreover, as the number of supporters swells in each faction, the probability grows that participants who otherwise have a good rapport to each other – for instance *meinheil* and *anheil* – will find themselves facing each other on opposing sides. Since they most likely have an interest in easing the tension before the situation peaks – because this could jeopardize their own relationship – they will try to mediate between the conflicting sides. They will probably not be able to resolve the conflict as such, but at least they will get people talking to each other and thereby contribute to its containment.

This, of course, is a very schematic and abridged version of how a conflict unfolds. In reality it is a very much more lengthy and complex process, and the act of mediating is often not such a straightforward affair as I have suggested. Land disputes display a further feature of significance and I have tried to describe this by the term transformation. What I mean by this is that in a long-lasting dispute, and parallel to the process of proliferation, the basic object of the dispute – land – shifts out of focus and is supplanted by a different issue, namely sorcery. The people no longer quarrel over a piece of land but begin raising sorcery accusations against each other. Land and sorcery, like the tamberan and sanguma, belong together; where there is a land dispute, the people say, the sorcerers are not far away. It corresponds to the cultural expectations that, sooner or later, either one of the antagonists will revert to sorcery as a means of pressing his claims or of intimidating his adversary. At least this is what those involved expect from their opponents. Looking at it from the other end, one finds that where sorcery accusations are voiced, land is usually one of the causes of the conflict.

Sorcery is no trivial matter in the eyes of the Wam. On the contrary, it spreads fear and anger among the people and is taken extremely seriously. It constitutes one of the dominant features of Wam culture and forms a central complex of reasoning along and by which the villagers perceive, interpret and express vital aspects of the social and political process. The sorcery complex comprises many more facets than merely ideas about killing people and performing magical rites. It is the main means of expressing and dealing with adversity and conflict. All the more serious forms of conflict finally culminate in the idiom of sorcery; this is certainly the case where quarrels over land are concerned. However, I do not believe that the transformation of dissent into terms of sorcery necessarily represents an aggravation of the conflict; moreover, I should like to argue that, through translating it into the idiom of sorcery, the Wam channel the conflict into a form which is more amenable to their mode of dealing with antagonism and adversity. It is directed away from the danger of evolving into a physical confrontation, and led into the field of "talk". Through transformation, the conflict acquires a new texture, it becomes more malleable and also more manageable. It is no longer centred on a "hard" issue – a piece of land – which implies and requires a "zero-sum" solution – the winner gets all, the loser loses all – instead it enters into a field of discourse which is tractable and fictile and which is

governed by theories, hypotheses, rumours and interpretations. During this phase of the conflict, rumours spread and hypotheses are tested concerning the recent, and some of the more past, deaths and how they are related to the actual issue of conflict and its principal antagonists. Other issues resulting from the process of proliferation, are threaded in, in an attempt to discern a general design of enmity and amity. They are woven into a dense fabric displaying the pattern of past and present village relations and how they relate to the problem at hand. There is a gradual build-up in this process, often interspersed by small-scale meetings which seek resolution of single aspects of the conflict, but which in the end invariably leads to a large-scale village debate which is likely to go on for two or three days. These events go under the term mediation.

Such a mediation usually commences as a dispute over accusations of sorcery but it quickly grows to include other issues which are of importance to the polity, and ends up as a general hearing on the state of the village. It includes a review of the recent past, its problems and conflicts, an examination of where the village stands at present and where it is heading in the future. More specifically, it is an event in which the overall political village landscape is mapped out and illuminated, and the existing relations of power are scrutinized. Significantly, much emphasis is given to creating the appearance of consensus and equality but, in actual fact, such events provide the occasion for the village bigmen to display their power and authority explicitly, and provide the chance for others to contest their positions. Mediations are events where words become action. Accounts are told and stories are heard, rumours are turned into accountable versions of past events, others are dismissed as heinous lies and malicious slander, facts are wrested from fiction to become "faction". They are the events where the experienced reality of the social and political environment is constructed and the order of things established. Even when, and if at all, decisions are reached, the accused are convicted, and the wronged receive compensation, the real sources of the conflict are seldomly effectively removed, they are merely shelved. The actual single quarrels are usually settled on a much more private, and less spectacular, basis between the parties that are actually involved, after the mediation. Others are left unresolved and go on smouldering under the surface, only to be picked up again and brought to the fore when the next mediation is called. Such large-scale mediations are regular features on the village agenda. They return with predictable certainty but at irregular intervals. They are not prescheduled but develop without prior notice out of smaller mediations which are held frequently to sort out problems and clear up altercations of various types. Some of these smaller tribunals also deal with sorcery or land problems, without them automatically developing into extensive affairs, which shows that the mechanism that triggers them off is not necessarily dependent on a specific issue. Instead, they appear to evolve when the prevalence of unsolved conflict situations in the village has reached such a density and degree of saturation, that a showdown becomes inevitable. Between 1984 and 1987 Warengeme witnessed four such large-scale mediations.[3] Three of them were set off by incidents of conflict in Wohimbil, the source of the fourth was the conflict within the *tineme* lineage of Talkeneme. I believe it is significant that they all had their origin in segments of the village where land problems are prevalent. Although none

of them explicitly dealt with problems of landownership and contesting claims, the issue of graun (ground = land) came up in all of them at some point or another.

NOTES:

[1] The price basis is usually what the piece of land would yield if it were under coffee, at 20 to 30 Kina per coffee tree.

[2] In two cases I witnessed, the disputed tract of land was already under cash crop use. In one of the cases the present users finally had to concede that the land was neither originally theirs, nor had their forefathers ever purchased it in the correct manner. They agreed to give back the land to the original owners but – and this was the snag – they demanded compensation for the coffee growing on the land. The sum they were demanding amounted to approximately ten thousand Kina. The garden contained 500 trees at 20 Kina each. The rightful owners were neither able, nor willing, to pay such a sum and, thus, this mediation too ended in a stalemate.

[3] At two of them I was present, the first in 1985, the second in 1987. One was held shortly before I arrived in the field in 1984, the other one in 1986 between fieldwork periods.

CHAPTER ELEVEN

THE EROSION OF FORMAL EXCHANGE

I now turn to a second aspect of change, the effects of which are maybe less striking in the short-term perspective than the growing shortage of land but which are certainly crucial to the working order of the social system in the long run. This refers to the gradual erosion of the system of formal exchange. It becomes manifest in two forms; firstly, in the general decrease in the volume and incidence of formal exchange, secondly, in the increasing monetarization of transactions. Specifically it relates to three domains of the culture: the termination of the tamberan and the attrition of the ritual exchange system, the erosion of the custom of death payments, and the complete monetarization of the marriage system.

Before I examine each aspect separately, I must point to one factor which is significantly responsible for this development. It stands in connection with the subject dealt with above and is a corollary of the complete orientation towards cash crop production and the generation of cash income, and the proliferation of bisnis in general. In the main, this refers to the overall decrease in the production and procurement of traditional foodstuffs and exchange valuables. More specifically, this relates to the production of yam and the raising of pigs, two of the main exchange items in the sphere of formal transactions.

THE DEMISE OF THE TAMBERAN

Although the villagers still cultivate the same range of food crops as they did before – with the notable exception of various types of long yam which were exclusively produced for the purposes of ritual display and exchange – they, according to their own testimony, produce decidedly less than in earlier days. What this comes to is that they no longer produce large quantities of surplus food which, traditionally, was produced for, and channelled into, the system of exchange. Production of food today is geared to the subsistence needs of the family, the basic unit of consumption, and no longer dictated by the demands of formal exchange. Whereas men used to have two or three gardens – depending on the stage of the ritual cycle – and cultivated a number of blocks in the gardens of kinsmen and kawas, each family now relies on what it produces in one garden (and on the residual yields of previous gardens). Men still give one another blocks to cultivate in each other's gardens but distinctly less often than before and more as a token of friendship than for producing additional food stocks for exchange purposes. Whereas gardening used to be a culturally highly-valued activity and the raising of yam used to constitute the epitome of maleness and created the foundation and essence of the ritual system, it is today not much more than a basic necessity of existence. The time, energy and resources set free by the reduction of food crop production is now invested in the production of cash crops. However, what coffee and cacao gardens produce – money – does not, and cannot, flow back into the social system in the same way as the traditional items of production.

What has had an even deeper impact on the functioning of the exchange system in recent years has been the diminution in the stock of both wild and domesticated pigs. The number of wild pigs has been dwindling ever since the introduction of the shotgun in the villages, and they are threatened with the same fate as overtook the cassowaries a few decades earlier, that is extinction. Even today the majority of the few wild pigs left in the village territory are really village pigs that have gone wild. Like cultivating yam, hunting used to form one of the main male activities, culturally highly valued and prestigious, and strongly embedded in the lore of the tamberan. Today, very few and mainly older men still go hunting, but more and more often their sorties resemble nostalgic trips to the bush because there is very little left to hunt, and they usually return empty-handed. In former times, the produce of hunting was invariably channelled into the exchange system, since neither the hunter, nor his wife and children, could consume the meat of an animal he had killed himself. The same rule applied to the domesticated pigs. They were exclusively used for exchange purposes, either within the context of the ritual system or as exchange items in other transactions (marriage, death, compensations). As in other societies in Melanesia, pigs represented the most important and common object in all varieties of formal exchange. Although shell rings (*itampinge*) were rated as being equally, if not even more, valuable, they were less important to the system as such because they only served for special forms of transaction. Pigs, on the other hand, were an intrinsic part of every kind, and every event, of formal exchange. One could say that they were the basic currency of the exchange system.

With the expansion of cash cropping, and the loss of significance of ritual exchange and the tamberan, the attitude towards pigs as an item of exchange altered. They retained their quality as an intrinsically valuable object, and still do today, but the villagers also became increasingly aware of the cost aspect of sustaining a large stock of pigs. Pig husbandry itself is neither labour intensive, nor time-taxing, but the villagers came to realize that pigs engender substantial supplementary costs, mainly in terms of labour, because the men had to build strong fences around their food gardens to stop pigs from entering and uprooting their crops. In the course of time, a growing number of villagers saw less and less sense in investing so much time and effort in order to sustain an element (pigs) of a system (exchange) they were in the process of discarding anyhow. It made much more sense to them to invest the time and labour saved on fencing off their food gardens in growing more coffee, or expanding into cacao. In the course of the process many people stopped erecting stockades around their gardens, and summoned the others to do likewise. However, as long as there were pigs in the village the combination of unfenced gardens and free-roaming animals invited trouble. Pig owners became involved in numerous quarrels and lawsuits which usually ended with them having to pay compensation. Clearly, village pigs were becoming a bigger cause of trouble than source of benefit.

Early in 1984, the villagers began considering the idea of banning pigs from the village completely, as one of the measures to promote cash cropping and to speed up the process of modernization. The issue was discussed at several council meetings but no decision was

taken[1]. However, the objection against keeping pigs became increasingly strong, and the pressure on the pig owners grew. Many of them began getting rid of their animals, either by making a last prestation to their kawas or, preferably, by selling them for money. Finally, in 1986 the Local Government Council in Dreikikir passed a motion banning all pigs from the villages of the area. Warengeme was one of the few villages where the new law was endorsed and came into force, whereas other villages flouted the council's decision and kept their pigs.

In many ways the villagers greeted this new development. It allowed the people to establish their food gardens closer to the village, which saved them the long daily walks to, and from, the gardens. These were left unfenced, without there being any fear that the crops would be destroyed by marauding pigs. But the new situation has its drawbacks as well, the effects of which the villagers feel distinctly at times. Specifically, this is the case when someone does need a pig, as, for instance, on the occasion of funerals. In such a case he is compelled to purchase a pig – usually one is not enough – from a neighbouring village which will cost him anything between one hundred and four hundred Kina, depending on the size and age of the animal, and how close the purchaser's relation to the seller is. The chance of his getting a pig on a delayed exchange basis is practically ruled out, not only because our man no longer has pigs that he could return at a later date but also because the man he buys it from most probably is not inclined to accept a return pig as payment, but wants money instead.

The banishing of pigs, the most important item of value, has accentuated the erosion of the system of formal exchange and, at the same time, increased the import of money and the dependence on the monetary system. Today, everything has a price: to marry costs money, funerals throw people into heavy debt, to purchase land is beyond everyone's means. The habitus of the earlier give-and-take system is giving way to a buy-and-sell habitus, even within the village and between kinsmen. The Wam are well under way to substituting for their gift exchange system a commodity exchange system.

During fieldwork in 1984/85, I registered 42 formal exchanges, which involved the transactions of a total of 49 pigs. The villagers were in the process of getting rid of their pig stock, with the intention of concentrating even more heavily on cash cropping and bisnis, and in order to avoid costly and trying litigations. The exchanges were effected in various contexts. Some were made as last prestations to ritual partners, others occurred in the context of funerals, the large majority of the transactions were repayments of old debts stemming from earlier exchange events. Of the 49 pigs, ten were purchased for cash both from within and outside the village, the rest were domesticated animals or such as had gone astray in the past and had been hunted down in the nearby bush. During the second six months of fieldwork in 1987/88, I recorded only nine pig transactions. Eight were purchased on a money basis – seven from other villages, one from Warengeme – and one pig was a stray one which, after being shot, was given by the owner, an old tamberan man, to his kawas in Luwaite. Thus it appeared that the main "currency" of the earlier system of formal exchange was itself becoming a commodity which the villagers had to purchase with money hard earned through cash cropping.

The curtailment of formal exchange as a central principle hits the social system at its pivots. These refer to the important life-cycle events such as marriage, funerals, and both female initiation on the occasion of first menstruation, and male initiation in the context of the all-encompassing ritual system, which, as I tried to show in part I, represented the crucial nodes upon which the social process hinged. This erosion process runs in concert with a general reorientation of values and goals towards views on human and cultural existence based on Western models, which have proliferated with the expansion of new religious creeds, alien epistemologies, novel concepts of the social and political order, and new economic principles, all of which give the impression of being vastly superior to the traditional social and cultural design. Thus, the traditional conception theory, which formed the ideational basis of the kinship system, and the central notions of the sharing of substance and the provision of sustenance have become redundant and given way to Western views on procreation, which show men and women to be equally involved in the process of conception. This, in turn, is gradually altering the people's views on the significance of the different kin categories and what they stand for. As mentioned earlier, among the younger generation there is a growing tendency to distinguish between kin types in terms of consanguineal proximity within both kin categories. The basic idea of the provision of sustenance, which previously engendered events of formal exchange on the occasion of steps in the life cycle, is being eroded. This has notably also taken its toll on the ritual complex.

In view of the supremacy of the properties of the encapsulating system, the tamberan has lost its basis of legitimation and much of its power of conviction. Over the long years of colonial rule, it became increasingly evident that the true source of strength and prosperity was not lodged in possessing control over the tamberan, in feeding each other with valuable pork and yam, and in conjuring up the voice of the tamberan by playing the secret trumpets; instead, the conviction grew that the real source of power was located in the fields of bisnis, in the Christian faith, and in new forms of organizing communal action.

As already mentioned on previous occasions, the last full initiation to a *nau* grade of the tamberan was held around 1960 in Talkeneme. Since then only a small number of single *pinandil* feasts and food exchanges have taken place, but no more initiations. In 1965 Wohimbil and Warengeme organized a *pinandil* feast in the context of reciprocating debts stemming from the 1935 *Nambo* initiation. A similar event in the combined wards of Wolhete and Talkeneme was cancelled a few years later, shortly after the introduction of the Local Government Council system. In the late sixties and early seventies the village was preoccupied with other issues (cash cropping, the Peli Movement, impending political independence, the arrival of the Catholic Mission, the opening of the Community School) and no tamberan events were staged during that time, until in 1979 Wolhete and Talkeneme finally staged the *pinandil* feast they had put off twelve years earlier. In 1980, a *nau* tamberan was planned in Wohimbil but was cancelled at the last minute, after all the preparations had already been made. There are different explanations for this decision. Some say it was due to sorcery threats which the initiators received (they apparently were

not qualified to stage a *nau* initiation), others maintain that they were overruled by those people in the ward who gave preference to cash cropping and bisnis. The same happened in Talkeneme a few years later. Here they wanted to hold a *pinandil* feast in order to pay back debts to a number of Urat villages for the contributions they had made during the initiation cycle of the 1959/60 *nau*. But a number of deaths in the ward, which were put down to sorcery, stopped all preparations. They were taken as a sign that the days of kastom were definitely over. The last kastom event involving the formal exchange of yam and pigs was held in Warengeme ward in 1983. It took on the form of a *pinandil* feast but, significantly, it was not termed as such, nor by any other indigenous term but simply as a kastom kaikai (customary food exchange). In addition, the organizers made it clear that the event was in no way tamberan related. It had developed out of a funeral feast for a prominent elder. It had no deeper significance and was staged as a kaikai nating, a feast merely for the fun of it.

Nominally at least, the large majority of men still have a ritual partner in either their own ward or one of the neighbouring ones but these are rarely active relationships in terms of reciprocal exchange. Many of the older men still think of their *pinandil* as being important to them but since there is little left to exchange, the relationships are primarily based on mere, albeit significant, friendship and the strength of past experiences. New kawas relations are rarely established, and where prospective ritual ties exist, such as in the case of Mahaite Ningaha's son Tetineme (cf. p. 127), they remain purely nominal and unfulfilled. Many members of the elder generation hold the view that today's young men are not capable of ritual competition and of keeping on a par with a *pinandil* because they are lacking in bun (bone, i.e. they are not strong enough). The younger generation counter this by saying that they are not prepared to invest so much time and energy in producing surplus food which is then "wasted" in competitive exchange; rather, they prefer to invest their resources in ventures which generate a revenue in monetary terms.

Today, the villagers are fully engaged in a dual economic system: the subsistence sector on the one hand, the cash crop sector on the other. Money found its way into the village already decades ago but, in the earlier days, it played only a complementary role. Over the last twenty years it has become a dominating issue and today everything revolves around generating opportunities of earning, or increasing, financial income. The main and only regular source of income is through cash cropping. The coffee and cacao gardens are owned individually or family-wise. A household-head usually tries to establish one garden for each of his male descendants so that by the time they reach adulthood they will have an independent source of income. In the context of cash cropping the principle of patrilineal inheritance dominates. The coffee is sold in the village, either to the bisnis group the owner belongs to or to one of the two independent coffee buyers in the village. Cacao is collected by the trucks of the Central Cacao Agency in Wewak. For some villagers, mainly women, an additional source of income is a small market which is held twice a week near the Community School for the benefit of the teaching staff. The villagers' average income is difficult to ascertain. The people were reticent about how much they earned lest others heard how high their income was. I estimated that at the current price for coffee[2] the

income ranged between 100 and 300 Kina per adult coffee grower, the majority of growers ranking closer to the lower than the upper margin. A substantial number of villagers have bank accounts at the Maprik branch office of the PNGBC (Papua New Guinea Banking Corporation). Since the crime rate has risen in the rural areas and theft and robbery are becoming quite a common feature even in the villages, the people are becoming wary of keeping larger sums of the money in the house.

There are two adequately-stocked trade-stores in the village, one in Warengeme 1, the other in Warengeme 2, and two others which are, however, only irregularly stocked. Various kinds of food (mainly rice, tinned fish, tinned meat, biscuits) are the items sold most frequently. The people, naturally, are self-subsistent in terms of food but trade-store food is consumed with increasing frequency. Rice and tinned fish are regularly sold out in the village. Other items of daily use include clothing, tools, household implements, kerosene. Whenever possible, these are preferably bought in Maprik, or even Wewak, because they are cheaper there. Other minor but regular expenses include transport costs when people go to Maprik, Dreikikir, or Wewak by PMV (Public Motor Vehicle), the children's community school fees, and council taxes.

However, these minor expenses stand in no relation to the costs which are incurred irregularly. These include, for instance, the school fees when somebody wishes to send a son or a daughter to High School in Maprik. Although secondary education is subsidized, it still costs the parents up to three hundred Kina per year to send their children to High School. Very few parents are willing to, or capable of, raising such a sum of money. The investment is not regarded as worthwhile since, today, not even a grade ten certificate is a guarantee for a salaried job.

However, what weighs even more heavily and has more significant ramifications for the working order of the social system are the costs which certain pivotal social events engender and which all social agents are faced with in some form or another at some time. I am referring to marriage and funerals.

THE MONETARIZATION OF MARRIAGE AND FUNERALS

Today, marriage has become completely monetarized. Sister-exchange marriage has practically vanished and "filling mother's hole" in the next generation is no longer acceptable. The young men and women profess their claim to having absolute free choice in choosing a partner. This, in effect, is not very much different from earlier times when men and women also enjoyed a high degree of optation, with the difference, however, that in previous generations the parents usually selected and marked a marriage partner for their sons prior to marriage which, however, were often flouted. This habit has stopped almost completely and this, in turn, has consequences for the transactional aspects of marriage. Whereas in earlier times the *alnde erke* payments made by the husband went to the family of the originally selected husband, thus often engendering a formal exchange between two agnatic segments, nowadays the payments are made directly to the bride's brothers and her father. Whilst the term *alnde erke* literally means "to get the head", it is translated today simply as baim meri (paying for, or buying, a wife). Exchange in this

context has lost some of its quality as a gift exchange; instead it has acquired the touch of a commodity transaction.

In the course of making the marriage arrangements, sister exchange is still the first option men try to realize, but with no success. Nobody except the prospective husband is in favour of such an arrangement. One of the reasons for this is that due to the growing importance of the nuclear family as the main unit of production and consumption, and the generally decreasing importance of the cross/parallel distinction in kinship, the brother-sister relationship is also gradually waning in significance whilst, at the same time, the husband-wife relationship is being accredited greater import. Thus, sisters are generally even less inclined to comply with their brothers' wishes, well knowing that the latter's influence on her children's future in terms of property and rights is decreasing. A wife's brother probably will have children of his own whom he has to provide for and supply with estate. The second, and main, reason, however, is that men regard the marriage of their sisters as an excellent source of cash income and, therefore, invariably insist on a direct payment in money. This is not necessarily out of pure financial speculation. Often the brother needs the money in order to get married himself. It is significant, however, that in Tok Pisin one's affines are frequently denoted as one's bisnis famili.

The prices are officially laid down by the Local Government Council, or, to be more precise, they demarcate the range of bride prices for their areas. In the Dreikikir area the prices range between 500 and 700 Kina, for the Maprik district they are slightly higher: 800 to 1000 Kina. The effective prices, however, are usually distinctly higher. Although still part of the Dreikikir LGC, the Wam are clearly orientated towards Maprik in this respect, and demands for 1200 to 1500 Kina are not unusual. There are various factors influencing the height of bride prices. One is the question of spatial distance between the woman's hamlet and her future place of residence. The farther away the woman will move, the higher the price tends to be. This is based on the argument that if the woman moves to a different village she will no longer be around to support her parents in old age and that, therefore, the task will fall completely to her siblings. The additional charge compensates for the loss of her contribution in the care of her parents. An important factor is, of course, the quality of the existing relationship between the prospective *meinheil*. If the husband is on good and close terms with the woman's brothers, he will probably be charged less. A third factor concerns the amount of money the suitor is prepared to offer in a down payment. If he is able to offer a substantial first instalment, the woman's brothers will be likely to reduce their initial demand. A further factor refers to the status of the prospective husband and whether he ranks as wealthy in terms of cash crop resources and whether he has an additional source of income, which can also mean whether he has a close relative who earns a regular salary.

The bride price is clearly an issue of negotiation and barter. In general, however, practice shows that the prices demanded are far beyond the villagers' financial capacities, no matter how affluent they are in terms of cash crops. No one is capable, or willing, to pay up to 800 Kina and more to get married. Nevertheless, these are the dimensions within which marriage transactions are conducted, and the prospective husbands usually have

little option but to comply. When the woman has eloped and come to stay with the chosen husband prior to the marriage negotiations, which is the common pattern, and if, in the end, the man decides against a marriage after all, he will be forced to pay the frustrated bride compensation for the time she spent with him. This is likely to amount to a substantial sum. In one case I witnessed, where the woman had stayed in the husband's hamlet for three weeks, the man was charged three hundred Kina. In view of this, getting married is often the more economic option.

The result of this imbalance between available resources and unrealistic demands is an expansive and complex debt system, which not only spans the village but the whole area. Debts were nothing unusual for the traditional exchange system. On the contrary, the whole order depended on an intricate system of credit and debit but the difference was that it involved specific value objects which formed an intrinsic part of the total cultural system. The present debt system involves money, and money holds quite a different status in the people's understanding. As a result, the full marriage price is never paid, and the wife's brothers are usually satisfied if they receive a quarter or a third of the negotiated price after a number of years. This practice is mutually acknowledged and although the claims are officially held upright for a longer period nobody ever realistically expects to be paid the full price. Nevertheless, the issue of bride prices and the debts they engender are the cause of much friction, especially since it is common knowledge that men are extremely recalcitrant about equalling their debts even when they do have money. Furthermore, the practice fuels the inflationary tendencies because, as everybody is aware that they will never receive the full amount, the initial charge is set at a higher level in order to counterbalance the calculated losses.

Money has, of course, also found its way into the realm of funerals and death payments. But, as against the field of marriage, where the institution of bride payments is not categorically contested, the traditional funeral procedures, especially the series of reciprocal exchanges of valuables that deaths engendered, are seriously being questioned. In general, the view is held today that the resources used previously for making the various death payments should be invested in more profitable and future-oriented ventures. To a certain degree this, too, is a result of the diminishing significance of the traditional perception of the different kin categories and the underlying rationale on which the distinction was based. Under the influence of Christian teaching and novel views on such issues as an afterlife in heaven, there is growing opinion that funerals should be staged with the primary aim of marking the end of a human being's earthly existence, mourning his death collectively, and honouring the deceased person. After taking leave of the deceased person and paying him the last respect through the holding of the death watch, funerals should end, opinion goes, with a communal meal for which the deceased's family is primarily responsible but to which all the participants, irrespective of their kin status, should contribute equally. But a funeral should no longer initiate a long series of exchanges which burdens the deceased's relatives on both sides (cf. Tuzin 1988:97).

This, of course, is a very modernistic and Westernized approach to death and funerals. Frontstage, everyone is in agreement with this standpoint and lends it support. However,

underneath, this radical departure from the customary mode of staging funerals does not go down well. The people feel uneasy after all, and on the part of the central actors in the funeral – the deceased's immediate agnatic and cross kin – one perceives a kind of nagging discomfort and bad conscience that the things are not being done properly. The performing of the various tasks in the burial procedures still follows the traditional lines, i.e. the sisters and female cross kin hold, wash, and dress the body, whilst the deceased's male cross kin take over the job of making the coffin and digging the grave. These rights and duties are not disputed but they generate unspoken claims of compensation following the customary habitus, even when the contrary is professed. In the period of heightened tension following a death, no one really trusts the other's confession to modernity; instead one fears retaliation in the form of sorcery, not especially from the different cross-kin segments but from the various people the deceased person possibly owed debts to and from the circle of his earlier ritual associates. Here, the legacy of kastom manifests itself strongly. Subsequently, the pressure on the deceased's immediate agnates to stage a final funeral feast increases gradually and surreptitiously until, in the end, they usually feel compelled to stage a feast after all.

In the present situation, however, this is not an easy task, since the traditional resources needed for the occasion are no longer readily available. The people today grow less yam, and pigs, the central items, are more than hard to come by. It means that they have to be purchased by cash from neighbouring villages. Moreover, the people's tastes and expectations have changed as well in relation to what they expect from a "modern" funeral feast. It invariably includes a variety of trade-store food items, mainly rice, fish, and meat and, in recent years, above all, alcoholic beverages, mainly beer and various spirits (whisky and rum). What this means, of course, is that funerals put a tremendous strain on the financial resources of those responsible for organizing and staging the event. The costs amount to hundreds of Kina, depending on how prominent the deceased person was. Thus, for instance, when the village magistrate Hiale's two brothers died in short succession he spent a total of 1300 Kina for a combined funeral feast on pigs, trade-store food, alcohol, and transport for the pigs which had to be purchased in various villages of the Bumbita and Muhiang areas. No one in the village is in a position to raise this kind of money on his own, and the only possible way of meeting the costs is by running into debt. In this way, the village debt system is fueled. I never undertook a closer survey of the system of dinau[3] in the village but the data I obtained in general indicates that the total sum of debts exceeds the stock of liquid assets in the village many times over. There is an ongoing redistribution of debts but the total sum is not being reduced, on the contrary, it is increasing constantly, especially in the face of inflation and continually rising costs of living and, at the same time, sinking cash crop prices.

Thus, we see that there are two ways through which money finds an inlet into the exchange system; the first is a direct, the second an indirect mode. The direct mode refers specifically to the field of marriage. Here the exchange takes on the form of a financial transaction. In theory, the prospective husband pays a sum of money and receives an equivalent in value. This contains a flavour of commodity transaction. In practice,

however, the people still make a clear distinction. Sisters are not regarded as commodities, nor is marriage conceived of as the sale of a woman; rather it is viewed as a recompense for the cession of her productive and reproductive capacities to the future husband. Nevertheless, harsher critics in the village dispute the legitimacy of bride payments today, on the basis that, firstly, in modern Western society the practice is unknown, and secondly, that Christian teaching contains no reference to the payment of bride wealth. Still, in principle, the majority of the people accept the practice but severely object to the size of the payments. They maintain that bride payments should involve only a token sum through which the husband expresses his respect for, and commitment towards, his future wife as well as his *meinheil*. The present practice, the opinion goes, promotes animosity and contention between affines.

The indirect mode concerns exchange events such as funerals. Here cash is not itself part of the transaction. Moreover, money is needed for the purchase of items of value, i.e. pigs, trade-store food and drink, which are then exchanged and distributed. Here the aspect of formal exchange is actually retained but the foundation upon which it is effected has radically changed, in the sense that exchange items are no longer the objects of an autonomous production process; instead they have to be procured via an intermediate process, i.e. through cash cropping and bisnis which generate the necessary cash resources. This, in turn, runs absolutely counter to the people's conviction of the basic aim and object of bisnis and money. Bisnis, the notion goes, constitutes one of the main media through which the villagers hope to gain access to, and equality with, the external modern world, and the money the villagers earn through bisnis should be used for this purpose exclusively. They should invest their money in new development projects, either individually or collectively, they should use it for the education of their children, for building better and permanent houses, for improved medical care, for nutritious trade-store food, and, last but not least, for the acquisition of the whole gamut of consumer goods which they see in the trade-stores and supermarkets of Maprik and Wewak but which they are unable afford. However, at present, all their efforts come to nothing because the little money they do earn is channelled back into the retrogressive system of exchange. Today, no one openly supports the habitus of formal exchange any longer but, at the same time, the system commands a momentum which is tenacious and which is proving difficult to break. It is fueled by the villagers' distrust of one another in terms of their profession of modernity and change, and the prevalence of deaths caused by sorcery, which the people interpret as evidence that men still revert to sanguma and poisin to sanction the failure to pay back outstanding debts and to coerce others to meet their demands.

Under the impact of change, and the new challenges and also opportunities it has brought with it, formal exchange has undergone a radical re-evaluation to the effect that today it is strongly negatively connoted and utterly rejected as an appropriate form of social interaction. It is not only looked upon as being incompatible with bisnis and modernity, it is also regarded as being socially divisive and as putting a strain on living together peacefully. It creates and fosters jealousy and conflict, and it is stigmatized as being one of the main means of exploitation. Men who promote the idea of senis

(exchange) and the law of bekim (giving back = reciprocity) are suspected of trying to create relations of dominance and placing themselves above others, i.e. substituting hierarchy for equality. The idea of the provision of sustenance through formal exchange has run its course; instead the competitive, or better, the contentious aspect of exchange stands in the foreground. Pigs and yam, previously the central value objects, are still endowed with intrinsic value but since they are intricately associated with the notion of formal exchange, and hence with the duty of reciprocation, they also contain a burdening and latently threatening element. As long as the donation of a pig calls for a return payment, the villagers prefer to do without these value items completely. They do not necessarily condemn the issue of exchange in the retrospect view. With maybe the exception of the followers of the New Apostolic Church who, for reasons of their own, hold a negative view on traditional culture, the people are proud of their kastom but they see it as something belonging to the past. The principles upon which kastom was based are definitely at variance with the demands of modern times, and formal exchange is not a viable foundation upon which the new social order can be based.

If my interpretation of the working order of the traditional social system bears any validity, the conclusion can be drawn that the abandonment of formal exchange is gnawing at the very roots of the social order. Formal exchange in combination with its subsidiary transactions of pooling and distribution – the system of reciprocities – was a multifunctional principle which served various societal tasks simultaneously. Being an ego-focused mechanism, firstly it retained and promoted the identity of the individual and underpinned his autonomy, secondly, it established relationships of equality between the immediate actors involved, and thirdly, on the strength of its network properties it produced cohesive interlinkages over a wider area of the social universe and promoted social integration. This does not mean that the system of exchange necessarily established a harmonious and unified entity, but it created an intricate web of mutual obligations, rights and commitments and sustained a balance between allegiances and enmities. Thus, in theory, the renunciation of formal exchange would entail that the social order is coming apart at its seams. However, even if a number of erosive features are manifest and the process of socio-cultural change is in full sway, this does not mean that the social order is totally collapsing or disintegrating. The texture of the social fabric is merely gradually changing. This is mainly due to the fact that, firstly, the present social formation is still drawing on the strength of the webbing of the old order and its underlying habitus – cross kin, for instance, are still accredited significance even though the idea of nurturance and formal exchange are failing – and secondly, because the parts that are being dropped from the system are being replaced by new elements; elements which are taken over from the ideational equipment of the encapsulating system.

Similar to what Geertz (1975:148) noted for social change in Java, we encounter among the Wam a shift from a situation where primary integrative ties between individuals which were based on exchange are being replaced by a social form which is based on ideological like-mindedness, which in turn demands "a new pattern of social living organized on terms of an altered framework of cultural classification" (Geertz 1975:150).

The proposed new social order rests on a platform which is supported by three ideational pillars: firstly, the tenets of the Christian creed as recounted in the Bible, secondly the ideology of bisnis, and thirdly, colonial, now state, authority. As described above, the Wam never seriously opposed encapsulation, on the contrary they showed a considerable degree of flexibility and adapted quite quickly to the novel situation. They subscribed to the Christian belief, they embraced bisnis after initial mild doubts, and they consented to colonial rule and, when independence came, to state authority. The villagers incorporated the new concepts, beliefs and rules into the indigenous system while, at the same time, they adopted an attitude or posture towards the agencies of the encapsulating system which was compatible with their view on the nature of social relations. They saw themselves entering into direct, dyadic, reciprocal relationships with the various agencies of the external system, or to put it differently, they interpreted the relationship to their encapsulators as being subject to the code of formal exchange. This attitude did not decline with the arrival of independence. In a way one could say that the Wam carried over their view of the social contract within their own society into their relationship with the encapsulating system. The villagers converted to Christianity, they gave the Catholic Mission land to build their church on, they became regular churchgoers. In return, they expected to be able to enjoy what the Catholic Church preached: harmony, prosperity and, overall, a good way of life. In the same way, they conceded to colonial rule and today they accept the authority of the state; they abide by the law, they participate in elections, and they pay their council taxes; in return, they expect the gavman (government) to reciprocate, to have roads and bridges built, to open new schools, to maintain law and order, and to establish efficient aid posts and health care centres; not in the country in general, but specifically in the Wam area. Also, they send their children to school, pay school fees and maintain the school buildings, in the belief that education is the key to formal employment and a salaried income. However, until now none of these expectations has been fulfilled, with the result that the conviction is growing that the encapsulating system is not keeping to its part of the bargain, similar to a kawas who does not return the gift of a pig. I shall be coming back to this point and the ramifications it has later on.

With the shift of the boundary of the code of formal exchange to the relationship field between villagers and agencies of the external system, a new basis of social organization within the village has been proclaimed, or to be more precise, the code complementary to formal exchange, sharing, has been extended to include the whole of village society and is now interpreted as the only valid code for all forms of social relations. The envisaged state of village society is one where communality and cooperation prevails. The village is seen to constitute a corporate entity displaying undivided loyalty and allegiance and where all villagers regard and treat each other as brothers and sisters. Sharing, mutual care and commitment to one another are the new principles of social living; principles which are founded on the notion of the traditional ideal of siblingship and which, in due course, have received validation and reinforcement because they are seen to be in accordance with the tenets of Christian belief and with the rules and values of a modern democratic system of government. By adopting this attitude the villagers believe themselves to be fulfilling the

necessary prerequisites for attaining equal status and full participation in the encapsulating system. This new form of social living the villagers designate as komuniti. I treat the concept of komuniti and its antithesis, kastom, in detail in the chapter after next.

Today, the attitude prevails that the Wam social actor is primarily a member in an undivided collective, i.e. the village community. The social agents are called upon to treat and regard each other as equals mainly on the strength of participating in the same collective, no longer on the basis of objective interaction. Men are all the same, the notion goes, because they belong to the village of Warengeme, because they are Wam who speak the same language, and because they share a common fate and hold a common stance in relation to the encapsulating system. In other words, they are required to think and act together as brothers did in the traditional system. They are tied together by a bond of loyalty, common interests and cooperation. The opposites whom they strive to attain equivalence with are located on the other side of the dividing line between the village and the encapsulating world. Metaphorically speaking, nurturance now comes in the form of government services, educational and health care facilities, and market economy opportunities. The credo is that villagers stand together and work united towards making the opposite side meet their part of the bargain.

What this implies is that there has been a shift within the underlying cultural ethos. In the traditional system, social equality was a product of pervasive competition and was the *unintended* outcome of social action, whilst in the modern configuration of village society equality has become an *intended* prerequisite for social action, a basic right the villagers are required to grant each other, a moral precept on which social interaction is to be based, similar to the one encoded in the ideal of siblingship. In tendency at least, the social system is no longer based on the action and interaction of its agents; instead, the social order rests on a stipulated social consensus and a static constitutional foundation, a body of rules and regulations, values and resources, which have been adopted from an external source and alien cultural background. Social action is no longer primarily oriented towards creating meaningful linkages between autonomous social agents through engaging in formal transactions; instead the aim is that individualized nuclei – modern conjugal families – direct their energy and resources towards securing a firm and prosperous existence within a framework of peaceful coexistence which relies on the efficacy of, and adherence to, rules and institutions which have been taken over and incorporated from the encapsulating system. *Social cohesion and integration is no longer a result of ongoing interaction, but expected to be the product of a shared sentiment instead.* Furthermore, the regulation of social and cultural existence is delegated to the incorporated institutions: the responsibility of education – modern enculturation – is delegated to the schools as the agencies of the formal educational system, the issue of morality is laid in the hand of the churches, the economy is increasingly dependent on a broader market system and monetary means, the task of conflict management and the sanctioning of breaches of legal norms is handed to the village courts, in more severe cases to the district and national courts, whilst the government and administration – on the local, provincial and national levels – carry the

responsibility of sustaining and, preferably, improving the institutional framework and securing the provision of the basic infrastructural means of modern existence.

THE SHIFT OF POWER

A further significant feature of the change process has been a noticeable shift in the allocation of power from the older to the younger generation and, in conjunction with this, a shift in the resources on which power rests. New forms of knowledge, skills, and experience have become the keys to power, to which the older generation no longer necessarily has access. This in turn is, of course, a consequence of the process of encapsulation and the circumstance that village society has become enmeshed in a more extended social, political, economic and cultural system. To an increasing extent, the villagers are becoming subject to and dependent on strategies devised by, and decisions made by, external agencies such as the government and the administration, the economic organizations such as the Sepik Producers Coffee Association (SPCA) or the Lus Development Corporation (LDC), or the commercial banks, and the various churches, to all of which the villagers nominally have access to but over which they exert practically no influence. Holding power and, concomitantly, also prestige in the village today requires having direct access to, and becoming party to, one or the other agency associated with the encapsulating system. This requires possessing knowledge of the working order of these agencies, being versed in the habitus prevalent there and, indispensably, having a command of literacy. Being literate is an essential prerequisite since a large amount of what is considered important knowledge and relevant information is encoded in written form. This notably refers to religious knowledge which is contained in the Bible, likewise it includes the legal code which is laid down in the various paragraphs of the Village Courts Handbook (Luksave buk bilong viles kot ofisa) which village magistrates and their assistants rely on in dispensing justice; all major economic transactions involve reading and writing and a basic command of arithmetic; further, communication with external institutions, like applications for jobs, or a bank loan, or for the admission to educational facilities, require a certain degree of literacy competence, just as does any kind of involvement in modern politics outside the village, be it on the level of the local government council, on the provincial level, or in party politics. In the village itself, important decisions (e.g. court orders, council resolutions) are kept in writing, and in meetings of bisnis or youth groups important items on the agenda and other critical issues are also put down on paper. The Wam are midway in the process of substituting a written culture for their oral culture. Older men find themselves increasingly barred from participation in the modern system, partly because they do not have a sufficient grasp of the issues which are of significance today and, functionally interrelated, because they do not command the means through which information is encoded and transmitted.

Thus, the power and the influence of the older generation and the traditional bigmen is gradually fading. A last stronghold they still occupy is the knowledge concerning the past. Overall, this is generally negatively connoted because it is associated with the tamberan and sorcery, but in one field it is regarded as a valuable asset. This is the domain of

property and genealogical relations which, in the face of expanding cash crop production and, simultaneously, increasing competition over land resources, is not of inconsequential significance. It is the older ones who know the history of the land, which ancestral name is associated with which tract of land, who has cultivated the tract in the past, to which *alamel* a name originally belonged, and how the name has been transferred over the last generations. This means that the older men are still in a position to exert a certain degree of influence and command leverage in the modern socio-economic sphere because before new economic projects which involve the use of land can be initiated they often require a clarification of the property relations, and this usually can only be satisfactorily accomplished with the help of the elders. Thus, one frequently finds that older men who used to be prominent in the traditional system are incorporated into the networks, or factions, of modern younger village leaders, whom they serve as councillors or mentors on issues that involve more traditional topics. In this way, both parties profit from the arrangement. The other side of the coin, however, is that, through their contacts with older, more traditionally minded men, modern leaders are suspected of not only receiving useful information and advice but also of acquiring harmful knowledge, i.e. sorcery knowledge, which they can put to use in achieving their aims. Time has not changed the pattern that leaders and bigmen fall prey to suspicions and accusations of sorcery.

The village leaders of today do not compete with each other by engaging in formal and ceremonial transactions, they compete against each other for a limited number of positions of authority within institutions created by, and associated with, the encapsulating system. The modern tokens of prestige and influence are not the insignia (e.g. *mahate wangul*, *sinime wangul* or *wate*) used earlier in ritual competition, but official titles which indicate a rank held in a modern institution. Some of these are directly embedded in the encapsulating system and thus are endowed with authority of a more official character, such as councillor, village magistrate, or magistrate's clerk. The men who have been elected to such an office are regarded forthwith as representing the state. The same goes for the elected local member of the provincial parliament. In this respect Warengeme is a special case because ever since the provincial parliament was instated the Wam-Urat constituency has been represented by a man from Warengeme. Prestige and status are also associated with official positions held in the wider economic establishment, for instance when a villager is nominated as director in one of the large cooperative societies like the SPCA.

However, these are not the only titles currently in usage in the village. Political independence in 1975 also brought with it an increasing participation in, and responsibility for, the modern institutions active in the village, such as the Community School and the (Catholic) church, by the local community. In educational affairs the villagers are represented by the Parents and Citizens Association (P and C), which is presided over by a board of management with a chairman, a vice-chairman and a secretary. The link between the resident Catholic priest and the parishioners is maintained by the parish board which is made up of members of the local communities associated with the Aresili CC. The parish board is also presided over by a chairman who is seconded by a vice-chairman.

Furthermore, all the modern village organizations such as the bisnis groups and various youth groups are drafted on Western organizational models and display a formally differentiated leadership structure and hierarchy of officials, with chairmen, vice-chairmen, secretaries, treasurers and so forth. Nominally, these different forms of office are endowed with authority, and the men holding them are designated as lida (leaders). But in practice and in effect these officials command only very restricted influence and on the whole they play only secondary roles in the field of village politics, behind the real men of influence. Nevertheless, these offices carry a certain significance because they are associated with forms of organization in which the villagers place great expectations and through which they hope to effect change and development, and because they convey import and the notion of official authority. Men exploit the titles they hold, in order to make their voices heard and their opinions taken seriously in meetings and disputes. It makes a difference whether a man speaks for himself or as the representative of an official body, maybe not in relation to the effects his words have but certainly – and this is equally important – in terms of the creation of self-image. These positions are often held by young and ambitious men who are in the process of building up their reputation and trying to extend their range of influence. For this purpose such offices of secondary importance provide convenient stepping stones.

A further point worth taking note of which the process of encapsulation has brought with it is the opening up and expansion of cultural alternatives. In the past, to put it shortly, the tamberan dominated practically the entire field of socio-cultural life. It was the overriding theme in Wam culture, and men's life – indirectly also women's existence – was subordinated to the dictates of the tamberan. Fertility, growth, strength, success, prowess, prestige and power were lodged in, and drawn from, the tamberan, and the only way of attaining these goals was by obeying the lore, and also the law, of the tamberan and performing in the culturally prescribed manner. Today, visions of modernity, affluence, and prosperity have been substituted for the tamberan. Society's basic orientation has shifted away from enacting and sustaining a self-contained system of belief and rationalization to finding ways of discarding an old and burdening cultural pattern and adopting a new cultural design. Although the villagers might agree on the general direction of this process – away from kastom towards komuniti – they find themselves confronted with the task of having to choose between different rot bilong developmen – roads to development – which all claim to lead to prosperity and affluence. This is notably the case in the religious sphere, where the villagers have the opportunity to choose between three denominational alternatives, all of which are of the Christian faith, but which differ in terms of form and belief contents. The same is true for the domain of modern politics, where a whole row of political parties and vociferous politicians promise to bring progress and development to the villages, and compete for the voters' favour. This not only causes irritation and a certain amount of disorientation, especially among the older generation, one also finds that traditional conflict groups in the village regroup under the label of the different churches and political parties. Instead of the village standing united in taking up the challenge of attaining a par with the encapsulating world, as the ideology of komuniti

proposes, the different factions compete with each other for primacy and over the claim of being in possession of the right rot (road) to development.

Ideological like-mindedness is a claim the Wam make to their own society but in view of the ideological alternatives and the fact that up to date none of the roads to development have led to the form of social living which the villagers envisaged, reaching a consensus on issues of development and change is proving difficult. The Wam are in the process of searching for a new social form where equality is not only the unintended outcome of action but a moral basis for social interaction. But, in view of the expansion of cash-cropping, the increasing significance of money in the village, whilst at the same time land as a basic resource is becoming scarce and the land-holding and -usage systems are becoming more rigid, even the equality of opportunity is being threatened.

I would like to end this chapter with a short anecdote. It is a brief episode I witnessed during a lesson of the catechumen school in the Catholic Church. The class consisted of both old and young men and women. The topic of the lesson was on the notion of kristen komuniti (Christian community). Whilst introducing the topic, the catechist placed the following question to his pupils: "Before [meaning before the arrival of the missions] did you have komuniti in the villages, tell me, did you have komuniti?" There was a prolonged silence during which the catechist eyed his pupils expectantly. In the end, an old man from Selni village raised his hand and answered: "Yes, we had komuniti before, we had the tamberan and we had exchange, that was our komuniti!" ("Yes, i gat. Bipo mipela wokim tamberan na mipela wokim senis, em komuniti bilong mipela!"). This of course was not what the catechist had wanted to hear and it took quite some effort on his part to deconstruct the man's evaluation of the traditional social system.

NOTES:

[1] One of the arguments against the ban was that it was useless to forbid pigs in one village when, at the same time, all the surrounding villages still had pigs.

[2] In 1987/88 the selling price of a kilo of coffee (*robusta*) fluctuated between 70 and 85 toea. At the beginning of the eighties the price at times had gone up to K 1.20.

[3] Dinau is the Tok Pisin term for both credit and debt. To give dinau is to lend credit, to have or to make dinau is to run into debt.

CHAPTER TWELVE

THE FUNERAL OF ANISI

In the following I shall describe the events surrounding and following the death of an old man called Anisi. Anisi was the father of a number of men that form the core group of the business enterprise called Tilli Bros, which plays a central role in the Bisnis movement described below. Thus, the funeral gives me the opportunity not only to describe how social and cultural change manifests itself in practice, and to display how some of the vital and basic codes of the traditional social system are being discarded, but also to introduce some of the central figures of the Bisnis movement. The events following Anisi's death lasted for ten days and were characterized by a considerable amount of tension and strain on the principal participants, this, in turn, leading several times to the eruption of conflict in which a typical pattern of dissension becomes apparent. This is a point I shall be referring to. A further aspect on which I want to shed some light concerns the manner in which Alex Anisi, one of the main actors in the drama, behaved and performed and how he exploited the occasion in order to demonstrate his abilities and qualities as one of the up-and-coming village bigmen and political leaders. Alex Anisi's rise to power in the village is a theme which accompanies us throughout the remaining parts of this thesis, at times explicitly, at others more implicitly (see plate 27).

The relationship pattern within this kin segment is rather complex and is shown below in diagram 12. The principal actors belong to a lineage (line L) which ranks as an early immigrant line. It is neither integrated in the MEPTS-system (cf. chapter 2) nor is it clearly associated with a specific ward. When the need arises it is commonly designated by its location name Tillenge. Anisi had been married to three women. His first wife died shortly after marriage and had no children. By his second wife, Silehile, he had two sons, Andrew Woluho and Alex Tani. His two first wives had been dead for some years. By his third wife Wanengwa, who is still alive, he had a daughter, Aresi. Wanengwa also had a son by a second man, Suboki, and his name is Gerry. Later on she married a third husband with whom she still lives and with whom she has had two sons. At first sight it appears as if Wanengwa was a poor, helpless woman being pushed around and shared between a number of men, but this is a wrong impression. In actual fact Wanengwa is a very lively and forceful person, and it appears that she did a lot of the choosing and pushing herself. Apart from his own children, Anisi adopted and raised a number of others as well. Thus, Gerry was brought up by Anisi after Suboki left the village to go "on station", a second adopted son is Norbert, actually a *ningal anheil* to Anisi (ZS), and the third is a man called Uhane from the *milmbe* lineage (K2) of Wolhete. All three of them grew up with Anisi and so also go by the name of Anisi: Norbert Anisi, Gerry Anisi and Uhane Anisi. Thus, together with his own two sons, Andrew and Alex, there are five men that today go by the name Anisi. When he grew up, Uhane Anisi married Aresi, Anisi's daughter by Wanengwa. They have five children, their eldest daughter is called Rondi. Uhane stands very close to Gerry whereas his relation to Alex is more ambivalent. Alex for his part is on

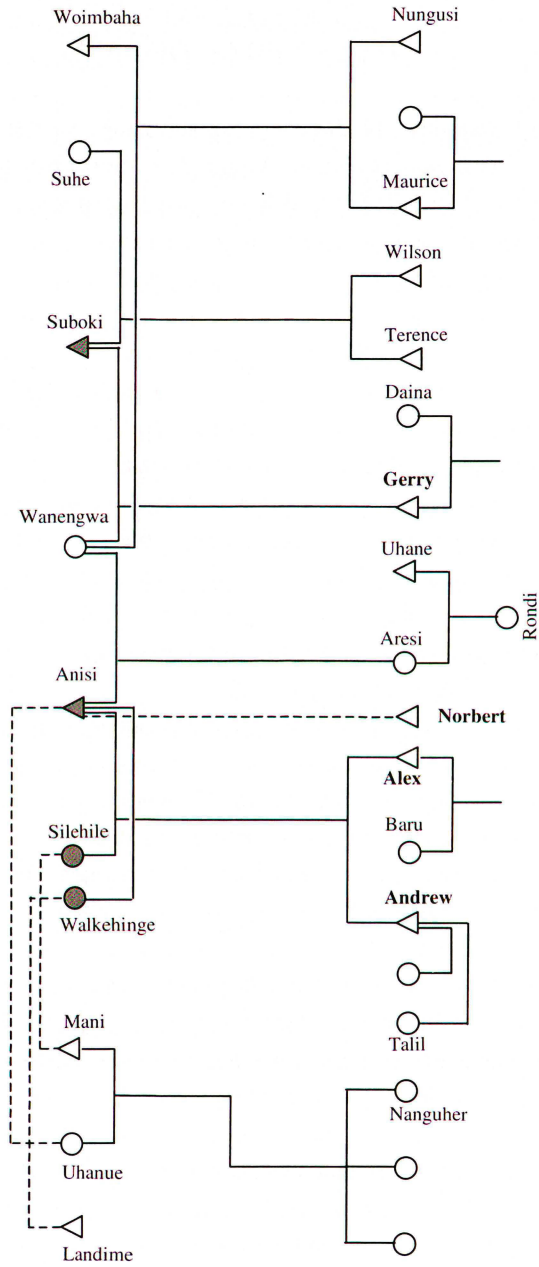

Diagram 12: The Tillenge kin chart

very close terms with Norbert. Two other important people in the context of the funeral are Anisi's two *meinheil*, the husbands of two of Anisi's classificatory sisters, called Landime and Mani. Mani has three daughters but no sons. The youngest is called Nanguher and she plays a role in the events following Anisi's death.

The rapport between the three principal actors in the setting, Andrew, Alex, and Gerry, is typical for Wam sibling relations in the sense that it is characterized by reluctant cooperation as regards common tasks and responsibilities – in this instance the organization of their father's funeral – and competition and latent antagonism which from time to time surfaces. Both Alex and Gerry spent much of their youth at school away from the village. Both of them were employed in the wage sector. Gerry worked for the Lus Development Corporation (LDC) in Wewak, where he held quite a high clerical position, and Alex was a primary school teacher. Despite their long absence from Warengeme they had not severed ties with the village, and at the time they were both in the process of "returning" to the village, by which I mean that they both were planning on eventually quitting their jobs and settling down in the village again. They were both ambitious and had very clear ideas of what they wanted to accomplish when they returned to Warengeme. Village development was a vital issue to both of them but, whereas Gerry was more orientated towards the promotion of business and cash cropping, Alex felt more attracted to a political career. He made no efforts to hide these ambitions. Both of them recognized that their relationship to each other was important, if not even crucial, for the success of their venture and they were aware that cooperation would get them further than antagonism and dissent. Andrew, the eldest, was equally ambitious but was less well educated and was more village based than his two younger siblings, although he too had worked in the wage sector outside the village for several years. Both Gerry and Alex were highly respected and well liked in Warengeme 2 and the villagers placed great hopes in them from the start, whereas the relationship to various segments in Warengeme 1, especially the people from Wohimbil, was more strained.

One Sunday morning (12th May 1985) I was sitting in my house writing up some notes. The majority of people had left for church already when Alex Anisi came to my house to visit me. After a bit of small talk, he asked me whether he could borrow two of my kerosene lamps. Being broad daylight, I asked him what he needed them for. He then confided in me that early that morning his father, Anisi, had died. He and his two elder brothers, Andrew and Gerry, had decided that they were going to keep the matter secret and quietly bury their father before all the other villagers returned from church, and they were now preparing the corpse for burial in his house. Needless to say, this was going against all the social rules and conventions, a fact that Alex and the others were well aware of. But, as Alex maintained, they did not cherish the idea of having to spend a lot of money on pigs and other foodstuffs which normally a death and funeral entailed. Alex felt justified in proceeding in this manner because, he maintained, during the last years of his life nobody in the village had bothered about his father and nobody had ever visited him in Tillenge, so that now they saw no reason why they should notify these people and stage a large funeral feast. They would, he said, tell the people about Anisi later on. I accompanied Alex back to his hamlet Tillenge. There, it very soon became apparent that they themselves did not feel comfortable with the idea of keeping the old man's death completely secret and

felt compelled to inform at least some of his closest cross relatives, such as the four *meinheil* he had been close to during his whole life. Then some boys were sent out to inform these men. At the same time it became evident that they would not be able to keep it secret any longer as soon as these four, more traditionally minded men, were informed. With the arrival of the four wailing *meinheil* and their families, the word spread quickly throughout the village and soon after the various church services ended the people began to crowd into Tillenge and mourn the deceased Anisi. Thus, what Alex and his brothers had tried to avoid soon became reality, a full funeral.

When the mourning crowd had gathered in Tillenge, Alex addressed them and told them that they were welcome to come and mourn and commemorate the dead man and that they were welcome to stay in Tillenge until the body was buried, but that he and his brothers were not planning on staging a funeral feast, nor did they have in mind to carry out all the food exchanges a death normally entailed. These were new times, he said, and there was no longer room for the habits of kastom. His father had died and this saddened him but the people should look towards the future and think about growing cash crops and bringing development to the village instead of looking backwards and clinging to the past. Further, he said that he was not considering holding an inquest on the circumstances and cause of Anisi's death. He then added that he had been one of the last persons to speak to his father and on that occasion Anisi had expressed his wish to be buried in Tillenge, and not in the public cemetery. The gathering acknowledged Alex's words silently but appeared to be rather confused by them and did not know how to react.

Anisi's body was still being kept in the house, but it was now being held and attended to by the correct category of kin, that is by a group of his *erhumo* (eZ) and *somauwi* (yZ) and these women's daughters, Anisi's *ananei*. They formed two seated rows facing each other with the dead man's body resting on their outstretched legs. When the last of the mourners had left the house they proceeded to undress and wash the body and then wrap it in sheets ready for burial. Two of the last men to appear on the scene were the councillor, Gista Happali, and the local Member of Parliament, Kani Happali. Alex explained to Gista his intention of burying his father in his hamlet, which put the councillor in a difficult situation since the law stated quite clearly that the deceased had to be buried in the public cemetery and because he, in the end, would have to account for this deviance. Gista evidently did not like the idea but he finally consented, under the condition, however, that Alex took the full responsibility.

With this settled, Alex told the group of Anisi's *ningal anheil* (MBS/FZS), who were responsible for making the coffin and digging the grave, to start their work. It was at this point that the first opposition arose. Evidently the burial was proceeding at too fast a pace for some members of the funeral gathering; they maintained that one should delay burying the body until the next day, in order to give relatives from other villages the chance to come and see the body. In addition, doubts were raised again as to whether it was correct to bury Anisi in Tillenge, and not in the official cemetery. The main person to voice these reservations was Alex's elder brother Andrew. He received increasing support from the others present, amongst them Gista, the councillor, and his brother Kani, the local MP.

This in turn evidently infuriated Alex, who adamantly refused to have his father buried anywhere else. Gradually a heated discussion developed and tempers flared, mainly between Alex, and Andrew and Gerry. They received support from Gista and Kani, who both pointed out that what Alex was planning was against the law. In the end only Alex and Norbert, an adoptive son of Anisi's and Alex's close friend and ally, were in favour of a hamlet burial, whilst the others present voted for an official burial. In the following Alex worked himself into a frenzy, pouring abuse and insults on Andrew, from whom he saw most of the opposition coming. The quarrel reached its climax when Alex stormed into his house and returned with a bushknife in his hand, threatening to kill anyone who wished to oppose him. He sat down on the steps of his house and silently waited for reactions from the gathering. Gista angrily left the scene straight after this, stating that he wanted nothing more to do with the funeral and that he didn't care what happened to the body. Kani went with him, but returned again shortly afterwards. Andrew also left, exclaiming that he was going to Kwari police station to inform the authorities of Alex's plan, but he changed his mind on the way and returned to the scene an hour later.

Matters quietened down and a man called Landime, one of Anisi's *meinheil* and an *anheil* to Alex and, in his role as a close cross relative, one of the principal figures in the burial procedures, went to talk with Alex and mediate. After lengthy discussions, during which Alex also explained his plan to have his father's coffin entombed in cement, it was decided to postpone the burial until the next morning and then have it buried in Tillenge, according to Alex's wish, officially also his father's last wish.

Things got under way again. The coffin was made by a group of men consisting of Anisi's junior cross relatives. Alex and Gerry, who were on speaking terms again, decided to fetch some bags of rice and a number of cartons of tinned fish from the trade-store in order to cook and distribute to the funeral gathering. Others went to harvest all Anisi's coconuts in various parts of the village, which were later also distributed with the food. When the food was cooked, it was shared out to all those present, being divided by single families. On the occasion of the distribution, Alex again addressed the gathering, repeating that they were welcome to stay overnight until the burial the next day, but that would mean the end of the funeral. There would be no las kaikai (funeral feast) and no further food exchanges after that.

Later in the afternoon a car from Luwaite passed through the village and the three brothers and the village magistrate took the opportunity to drive to Kwari (just south of Balif) to ask the police whether they had any objections to a hamlet burial. They received permission and returned to the village shortly afterwards. Councillor Gista, for his part, had reported the matter to the aid post orderly in Aresili with clear instructions that the matter was to be reported to the Health Inspector in Dreikikir.

In the evening a prayer meeting was held in Tillenge, which was conducted by one of the church leaders from the Catholic church. The paths leading to and from Tillenge were then symbolically blocked by laying cordylines across them in order that Anisi's soul could not wander off before the body was buried. Throughout the rest of the night the people kept the death watch.

Early next morning the grave was dug, again by a group of Anisi's *ningal anheil* (ZS). Shortly before the actual burial the same group and some more of his *anheil* appeared in Tillenge with their faces, legs and arms smeared with mud (*mianke*) and holding bushels of cordylines. They danced in circles around the coffin as a means of expressing their sorrow and paying farewell to their *agel anheil*. Normally they should have been followed in the same fashion by his ritual partners, his *perengele isili* (those of the same spear) and his ritual opponents from the opposite moiety of the different wards (*pinantime*), but here this was not the case. The reason given was that Anisi himself had not actively participated any more in the ceremonial system during the last decades, and that his immediate *pinandil* had died long ago and had never been actively replaced. Then the body was buried and the grave covered up.

The council work day, normally held on Mondays, had been called off due to Anisi's funeral. Although both Alex and Andrew had stressed a number of times that the villagers were not to remain in, or return to, Tillenge after the burial, a large number of people returned to the hamlet shortly before noon to continue to mourn the death of Anisi, thus complying with the customary funeral habit. A considerable number of the closer relatives set up temporary residence in Tillenge. The same process was repeated on the next day and the day after next, until it became apparent to Alex, Andrew and Gerry that they would not get around staging a more official feast to terminate the period of the death watch.

On Friday, four days after the burial, a las kaikai, a feast which should officially end the death watch, was scheduled. The people brought taro, bananas, sago wrapped in leaf parcels, pumpkins, coconuts, and a few yam. Many of the people, however, only made a token contribution, maintaining that it was not the harvest season and that they were rather short of food. The various foodstuffs were then heaped in separate piles. Alex and his two brothers were planning to contribute three pigs to the feast, but they did not own any themselves, nor did anyone among their closer kin. So they went in search of pigs. Finally they were able to procure two, one from a man of Talkeneme for the price of 160 Kina, the other, a smaller one, from Bana for 70 Kina. Gerry and Alex contributed the money. By then time was getting on, and it was decided to postpone the feast to the next day.

During the night, discussions arose concerning the third pig and to whom it was to be given. By customary law it would have been established procedure that, amongst others, the group of women that had attended to and held the dead body before burial, Anisi's sisters and their daughters, should receive payment for their services. Unexpectedly, however, these women were against the idea of being presented with a pig, because, they said, their husbands were either dead or absent "on station" and thus they would find it hard to raise enough money on their own in order to reciprocate the pig later. There was much talk, and both Alex and Anisi's *meinheil* Mani, the husband of one of the sisters and one of the principal figures in the whole matter, showed understanding for their situation, but Landime, one of the other main figures, insisted that the payment should be made. In the end, Alex and his brothers gave in, and it was decided to present the smaller of the pigs to the group of sisters the next day. It was made clear, however, that they were under no obligation to make a return prestation later on. Under these circumstances the women

consented. The issue of paying compensation to Anisi's junior male cross kin who had made the coffin and dug the grave, however, was never raised.

The next day the pigs were killed, dressed and cooked, and from a part of the food collected the day before a communal taro soup was made for the visitors to eat during the day. The rest was set aside for distribution. A group of men went in search of a third pig but with no success, and they returned later in the day. Late in the afternoon the food was distributed. Two rows of banana leaves were laid out, one for the group of sisters and sisters' daughters, the other, longer one, intended for the visitors who had contributed food to the feast and for the numerous helpers who had contributed to the staging of the event. Alex, Gerry and Andrew began to distribute the food for the visitors, laying it out on the banana leaves, each leaf indicating a single contributor and his family. They were supported by Landime (see plate 9). Mani distributed the food and pork for the group of women. The three younger men had great difficulty in keeping an overview of who had contributed what, and how much, what amount they should receive in return, and how to divide up the diminished stock of food in order to make ends meet. In the course of the process they had to make numerous corrections and amendments to their row of food. They listed the names of the various receivers in a notebook. It soon became apparent that there was not enough food to go round, mainly because they had not been able to procure a third pig but also because much of the food had already been used to cook the soup and because the visitors had not contributed liberally in the first place. On the other hand, the three brothers could not afford to return only the same amount, or even less food, without losing face, especially since both Alex and Gerry had salaried jobs and a steady income, and a trade-store on top of that.

Before the actual distribution took place, Alex and Gerry apologized to the visitors for the meagre amount of food and announced that in the next few days they would go to look for a pig in one of the neighbouring villages and, if that proved unsuccessful, they would buy a cow from the agricultural station in Bayinik, near Maprik. Then they proceeded to distribute the food. Gerry went down the line, beating each pile of food with a short stick and calling the name of the recipient in the traditional manner, but with the help of the list in his notebook. Mani did the same for the second row of food but, naturally, without the help of a notebook, and at speed. He had proudly finished his own row whilst Gerry had hardly begun to read out the names on his list (see plate 10).

After that the gathering dispersed and the visitors returned to their hamlets. The three brothers and a number of other residents from Tillenge and Enniki remained and discussed the problem of the third pig. The atmosphere was taut, and tempers flared quickly. Not only did the fact that they had not been able to satisfactorily reimburse all the visitors weigh on their minds, but the whole affair was becoming a financial burden as well. The store in Tillenge was just about empty, after hosting forty to fifty mourners for nearly a week, and would have to be restocked, and there were still the costs for the third pig to be reckoned with, not counting the 230 Kina spent on the first two pigs.

In this rather strained setting, the news broke that Nanguher, Mani's youngest daughter, had eloped with a man from Aresili whilst everybody had been occupied at the feast. Her

parents were strictly against a marriage and demanded that she be brought back that same evening. Normally this would have been the task of the woman's brother or brothers, but since Mani had no sons of his own, it was Alex who took over the task. Nominally Nanguher belonged to the category of *elmessie* (W) to Alex, but since both he and Andrew had spent much of their childhood with Mani's family and there were no natural brothers around, they had converted their relationship to one of siblingship when they grew up, and they were now *nauwie* and *numandi* to each other. Alex was on very close terms with all three daughters, Andrew's relationship to them was more neutral, while to Gerry they were still classified as *elmessie*.

Alex was furious when he was told of the elopement. He set out for Aresili straight away and brought her back the same night. The next morning she was severely scolded by her father whilst she hid behind Baru, Alex's wife. Later in the afternoon, and in anger, Alex encountered a young woman called Rondi and gave her a beating, because she had apparently coaxed Nanguher into eloping to Aresili. This was a serious matter because Rondi was Alex's *ananei* (ZD) and under no circumstances should he have raised a hand against her. Moreover, he had been reacting on hearsay only and had no proof of Rondi's involvement in the affair. Rondi's father Uhane, who was on very close terms with Gerry, but not necessarily with Alex, reported him immediately to the councillor with whom he (i.e. Alex) was not on the best of terms at the time because he had ignored his orders concerning the location of the grave. The affair around Rondi also cast a shadow on Alex's relationship to Gerry, after the latter had reproached him for his conduct. Gerry was Rondi's immediate *ananei* (i.e. the daughter of his real sister) and it was Gerry's duty to protect her. A mediation was held the same evening in the councillor's hamlet and the affair was ended, for the time being at least, when Alex apologized to Rondi and her father for his behaviour.

In the meantime, the quest for the third pig had been unsuccessful, and in the end the three Tillenge brothers decided to go and buy a cow. Gerry and a few other men went to Baynik the next day (Monday) and bought a cow for the price of 457 Kina. It was slaughtered the following day and the men finally brought back the carcass on the Wednesday, having had to wait for the agricultural officer to arrive to inspect the quality of the meat. On the same day, by pure coincidence, a man from Wolhete caught and killed a wild pig in a pig trap in the neighbouring bush. Following the rule that a man cannot consume the meat of an animal he himself has killed or caught, he presented the pig to his kawas from the Tillenge lineage, who, in turn, passed it on to his lineage mates in order to distribute the meat together with the beef. Two earth-ovens were built and the meat, now in abundance, was cooked.

The same day, fresh trouble arose when Gerry's wife, Daina, rebuked Nanguher and accused her of inciting Alex to beat Rondi a few days earlier whilst they were collecting firewood in the bush. Nanguher, hurt and shamed by these allegations, came back to Tillenge and told her father and the other people present about the accusations. Both Mani and Alex were extremely angered by this and, when Daina returned to Tillenge with Rondi shortly afterwards, Alex scolded her severely and showered abuse on her. Referring to her

residence in Wewak with Gerry, he sarcastically also asked her whether she thought we she was the "queen of the town", the way she behaved in the village and sowed seeds of animosity between relatives and friends. He also accused her of being the real reason for all the dissension between himself and his brother Gerry, who at the time was not present.

Alex's and Mani's wrath was also directed at Uhane, Rondi's father. Alex had not forgotten that it had been Uhane who had reported him to the councillor a few days earlier, but there was also a deeper reason for their anger. After the food distribution, a few days earlier, Alex had wanted to forbid Uhane to come to Tillenge any more because he had contributed neither food nor money to the funeral feast, nor had he helped in any other way, as would have been expected of him. But in the end he was overruled by Gerry and Andrew, who both were on better terms with Uhane than Alex was. Although nominally from a different line, Uhane had been adopted as a child and raised by Anisi, and when he grew up he had married Anisi's daughter, Aresi, Gerry's sister. Later in life, however, he had never shown gratitude towards the old man, and neither he nor Aresi had ever lent a hand in supporting their father by providing food or housing or money. This had been left to others. In addition, Uhane is Mani's kawas or *pinandil* and his duty should have been to support Mani in arranging and staging the funeral together with Anisi's sons. This point was brought up by Mani during the discussions and the old man told his kawas that it would be up to him to erect Anisi's *takil*, the commemorative mast displaying the deceased's various personal possessions and ceremonial insignia, and supply at least one pig. The erection of a *takil* had been Mani's idea. On one of the previous days he had exclaimed that he would erect a mast all by himself, to show the village what a good *meinheil* Anisi had been to him. This, however, was not much more than a rhetorical performance on Mani's part, the intention being to demonstrate to the funeral gathering what a good *meinheil* he himself, in actual fact, was. Later, the issue of the *takil* became a suitable hook on which to hang his contempt for Uhane.

Towards the evening the meat was wrapped in leaf parcels and distributed to a broad, but kinwise undifferentiated, range of people. They included all those people that in some way or other had contributed food or services during the period of the death watch and a number of others who were known to have rendered a service to Anisi at some period in the past. Thus Anisi's burial and funeral finally ended after ten days.

The whole event turned out, as we have seen, to be rather a blunder. It certainly cost Anisi's sons markedly more than if they had not tried desperately to avoid a more traditional funeral, which would have left them more time and given them the opportunity to organize their resources better. The event displays a mixture of signs of rapid change and traits embedded in the traditional culture.

One of the most conspicuous aspects is certainly the initial plan of the three brothers to bury their father secretly. Their courage failed them in the end, however, and they had to concede that their plan was not only socially not feasible but also morally unacceptable. But since their idea was never made public they did not have to account for it. Nevertheless, the fact that the plan was conceived in the first place is suggestive of the rather low respect which adult sons show towards their aged fathers in practice, although, I

must add, this is rather an extreme case. But it helps to explain why fathers often prefer to live with their daughters and not their sons in old age.

The announcement that they were not considering holding an inquest on the circumstances and possible causes of Anisi's death at the time is not extraordinary. It usually takes a number of weeks or months until the first explanations surface and, possibly, accusations of sorcery are raised, during which time different theories are developed and hypotheses are tested. In Anisi's case this did not occur, and even after three years no attempts had been made to elicit possible causes and seek an explanation. This is partly due to the fact that Anisi was weak and old when he died and that his death was regarded as natural, partly to the circumstance that his sons were preoccupied with other more important issues and were not prepared to invest the necessary time and energy in an inquest, which often does not come to a result anyhow but is liable to generate severe contention and strain in the village.

In spite of the prevalence of the ideology of modernization and transformation and the fact that the funeral participants professed to be oriented towards change and development, the legacy of kastom was still strong and the traditional allocation of duties and responsibilities surrounding the funeral procedures still endured. Thus, Anisi's sons felt compelled to notify their father's most important relatives, his *meinheil*, about his death, well knowing that failure to do so would lead to serious arguments and have repercussions on their own relations to this important kin category. Here the traditional significance of cross kin became evident as a pervasive cultural pattern. When the mourners arrived in Tillenge it was Anisi's sisters and their daughters who took over the responsibility for the body, thus also complying with the culturally prescribed division of duties. The same goes for the male *ningal anheil*, who prepared the coffin and dug the grave. The basic notion that the body of the deceased passes out through the hands of the sisters and matrilateral kin still existed but it was no longer accompanied and correctly acknowledged by a series of transactions of valuables. In former times the relationship between the deceased's immediate kin and the various segments of crosskin, and between the different moiety sections, would have been sustained through a chain of reciprocal gift exchanges following the funeral which validate and renew the relationship threatened by the loss of a kinsman or kinswoman, but this was no longer the case here, and the same goes for all the other funeral events I witnessed during my fieldwork period. In immediate terms this had no direct consequences for the relationship between the various kinsfolk involved. On the contrary, many of them, like Anisi's sisters, appeared to be relieved not to be burdened with the duty of reciprocating the gift later on. But in the long run the cessation of the death payments and other similar exchanges, which constitute one of the main mechanisms through which the system is kept in motion and social integration sustained, is bound to wear down and erode the basic fabric of the social system.

Another circumstance in which the legacy of kastom also becomes apparent is in the general reaction and conduct of the villagers after the death. Although they were explicitly told not to return to Tillenge after the burial and were admonished preferably to think about cash cropping and development – a view they acknowledged and, superficially at least,

agreed with – they came back all the same and tenaciously remained there and kept up the death watch, as prescribed by customary law. Here the discrepancy between frontstage ideology and rhetoric and practice becomes evident. Although the people profess their willingness to abandon kastom, the practice of kastom seems disinclined to let the people go. It appears contradictory but at the same time it is significant that during the time the mourners spent in Tillenge one of the main topics of discussion concerned the necessity of discarding kastom and the priority that development should be granted.

Nobody from the group of mourners openly or publicly demanded that a funeral feast be held. In view of Alex's speech about the priority of development and change, such a person would have been exposing himself as an adherent of kastom. It was the silent, but gradually mounting, pressure effected by the continued presence of the mourners which imposed the decision on the three brothers to stage a feast after all. Nobody stood up to oppose the decision, on the contrary, a scarcely audible sigh of relief appeared to pass through the gathering, expressing the collective feeling that the funeral was proceeding in the correct manner after all. A continued refusal to hold a feast on the part of the three men would have resulted in a loss of face and prestige for them. In view of their position and their ambitions in the village this was something they could not afford.

Another aspect I would like to deal with is the behaviour and action of one of the main participants in the event, Alex Anisi. Together with his two elder brothers, he took over the organization and the staging of the funeral and, in the course of time, he managed to manoeuvre himself into a central position and became the leading figure on the scene. As mentioned above, Alex was in the process of "returning" to the village and installing himself as one of the coming village leaders. This was his stated aim. In which specific role he saw himself in the future he, at the time, was unable or unwilling to specify and all remained vague beyond the general intention and ambition to acquire the necessary influence and position to be able to play a leading role in village politics. One of his first acts in this respect had been the reactivation and reorganization of the Warengeme 2 youth group a few months earlier, which is discussed later. Whenever present in the village – most of the time he was absent at a school near Timbunke where he was still employed as a teacher – he noticeably made his presence felt and he seldom missed out on an opportunity, such as public meetings, to air his opinion on the state of affairs in the village and to expound his own ideas of what should be done to promote development and bring change to Warengeme. Many villagers agreed with his views. Thereby he was gradually extending his basis of support and his range of influence, but at the same time he was also challenging the existing political order and, implicitly, also questioning the efficiency and abilities of the present village leaders, mainly the councillor and the local member of parliament. Alex's behaviour on the occasion of his father's funeral, which was very much a public event, must be seen against this background.

On the surface, Alex's conduct appeared controversial especially in terms of his rapport with the canons of kastom. On the one hand he acted in utter disregard of customary values and habits, and on the other he displayed a strong, if not even obstinate, allegiance to tradition. Firstly, he (with the support of his brothers) wanted to keep the death and burial

of his father secret and did not want to inform anyone about what had happened. Thus he was not only violating customary practice but actually contravening the codes of morality. Secondly, later in the day, he informed the gathered villagers that they were not to expect a funeral feast, nor did the brothers plan to initiate the various food exchanges a death normally entailed. In both cases he was expressing his disdain for kastom and pointing the way to radical transformation. Therefore it was highly surprising, and apparently contradictory, that in the very next moment it was Alex who adamantly refused to have his father buried in the public cemetery and wanted a hamlet burial instead, actually the traditional Wam form of burial. He made it clear that this was not necessarily his own idea, but the last wish of his father – an assertion his opponents could neither disprove nor corroborate. When one considers that, shortly before, Alex was set on having his father buried secretly and hurriedly, this swing even acquires a touch of cynicism. It also indicates how indifferent the relationship between a father and his adult sons can be in practice. However, the original plan (secret burial) never became public knowledge, which meant Alex and his brothers never had to justify themselves and publicly account for their plan. Instead, Alex was able to stage-manage a demonstration of his allegiance to his deceased father and show his relatives how committed he felt to fulfilling his duties as a son.

In order to explain and understand Alex's mode of behaviour we must place it in a wider context and try to grasp what messages he was trying to convey to the gathered audience by his action on that specific occasion and on the days that followed. Although his propositions appear contradictory – pro-kastom on the one hand, anti-kastom on the other – his behaviour in itself was consistent and showed method, in the sense that he displayed an excessive degree of individual autonomy throughout and tenaciously adhered to the way in which *he* believed matters ought to be settled and the way *he* wanted things doing. In the course of the process he did not hesitate to openly challenge and confront people who were of a different opinion. He risked a serious conflict with his elder brothers which at one point reached a threatening pitch. To the people this was nothing extraordinary, for fraternal strife reflects a culturally expected, and partly even accepted, pattern. Where he believed he could get away with it by virtue of his status and the actualities of the situation he even risked a confrontation with his *meinheil* Uhane, a member of a category of kin with which otherwise conflict is shunned and avoided if possible. Furthermore, and most significantly, he defied the authority of two of the official village leaders and bigmen and he made it clear that the threat of prosecution by the police made no impression on him either.

Although, at the time, everybody had sided against Alex and believed that he was breaking the law, later many people, including many older men and women, gave their approval and even praised his conduct: Some said that he had acted as was expected of a real man, that is he had remained firm in the face of opposition, and not yielded to pressure. Although one cannot doubt that his motives for acting the way he did were sincere, it cannot be overlooked that the occasion also provided him with a suitable opportunity for self-presentation and, to demonstrate his worthiness and some of the

qualities necessary for the acquisition of leadership status. The fact that he had stood up for his convictions and not succumbed to pressure, even when two village leaders had appeared, did not go unnoticed and certainly made a deep impression on the gathering.

Although he acted egoistically in many ways and tried to overrule the others, he, on the other hand, respected many of the basic cultural rules and significant social norms. Thus, for instance, the only wishes and suggestions he did comply with were those of his two *agel anheil*, Mani and Landime. They represented the most important kin category and were in a position to exert a high degree of authority and, even for a person in Alex's position, it would, under the circumstances, have been unwise to oppose them in front of the full funeral gathering. This would not necessarily have been regarded as a show of strength but as a sign of disrespect, and this was not what Alex was aiming for. Landime was able to persuade Alex to lay down his bush knife and to agree to postpone the funeral until the next day, but he too failed to make him change his mind about the location of the grave. Later on, he also prevailed with his suggestion that the group of women that attended to Anisi's body before burial should be paid a pig as a compensation for their effort.

He also showed a similar respect and concern for a second significant category of kin, namely his sister. Here I am referring to the episode of Nanguher's elopement and her retrieval by Alex. The situation is a special one because Nanguher was the daughter of Alex mother's brother, Mani. This meant that nominally the two would stand in a husband and wife relationship to each other. But for special reasons they did not, and Alex was classified as Nanguher's *hurineme*, that is her elder brother. By fetching her back from Aresili, Alex was not only showing concern for a younger sister, thus conforming to the cultural standards and performing in the way people expected a *hurineme* would, he was, at the same time, expressing his allegiance and deep respect for his *agel anheil*, again in accordance with the cultural disposition, and thus killing two birds with one stone. Although he was angry with Nanguher at the time and scolded her for her behaviour – again a normal reaction for a *hurineme* – he defended her passionately shortly afterwards against allegations made against her by his brother's wife, who was, by classification, also an *elmessie* to him, and someone to whom he did not have to show restraint himself.

All this action took place in public and before the eyes of the assembled visitors, amongst them many of the older village residents. Alex's conduct not only achieved results and set things in motion; because he was acting in the front region of society, i.e. in public, his behaviour also carried significant meaning and conveyed messages to the gathered villagers. By complying with the cultural standards and acting correctly in relation to important kin categories, such as mother's brothers and sisters, he was telling the villagers that although he was radically against the actual habits and duties of kastom, and in favour of modernization and transformation, he stood with equal fervour for the preservation of the basic social ideals and values of Wam society; and that the change and development he envisaged for the village did not entail the disintegration of the social fabric and the decline of morality in society.

This leads over to the last aspect I want to deal with in the context of the funeral. I am referring to the pattern of conflict that developed in the course of the drama. Death is not only a life crisis in a very immediate and final sense, i.e. the end of existence for the deceased person, it also constitutes a period of tension for those left behind. Apart from overcoming the grief and sorrow caused by the death of a relative, the next of kin are responsible for having to organize and stage-manage the funeral and cater for a large number of visitors. This also means that they have to solve the problem of securing the resources necessary to host the event. In earlier days this mainly meant the provision of pigs; today it involves the investment of financial means (to buy the pigs) which often exceed the capacities of those who are immediately affected. It also constitutes a crisis in a different sense, namely, it entails the process of reordering social roles and positions between the dead man's descendants, mainly his sons. In theory, the eldest son takes over and follows in his father's position. He carries the responsibility for those matters which concern the sibling group as a whole, for instance the organization of the funeral. Given the ambiguous disposition that characterizes sibling relations, the value placed on personal autonomy, the sensitivity towards status, and the often latent antagonism between brothers, this process often does not go uncontested. This also became evident on the occasion of Anisi's death.

One of the more conspicuous traits of the whole drama relates to the contention between the three brothers, Andrew, Alex and Gerry. On various occasions the submerged antagonism surfaced and conflict erupted, especially between Andrew and his younger brother Alex, but it also involved Gerry. In this connection one must naturally keep in mind that the described event was only one incident in a long-term, and ongoing, relationship during which there had been innumerable occasions of dissent and strife. As it turned out, conflict was always patterned in the same way: it was Alex versus Andrew or Gerry, or both together, whereas Andrew and Gerry stuck together or, at least, retained a neutral relationship towards each other. Although Gerry contributed the largest part to the funeral costs in terms of money, it became evident early on in the event that Alex, for his own purposes, made himself responsible for stage-managing the event and, subsequently, he became the leading figure. Herein lay the central source of the conflict. Through his conduct, Alex was disrupting and inverting the ranking order of siblingship since, nominally at least, the leading role should have been allotted to Andrew, the eldest son and the head of the sibling group. In many other traditional issues, such as land disputes, Andrew very often did play a leading role, simply because he was better versed in customary law and land relations than his two younger siblings. It would only have been natural that on the occasion of a funeral – likewise a more traditional event – Andrew be granted the leading role. But this was not the case here, and Alex claimed the position for himself, thus challenging Andrew in his position as *nauwie erke* (head brother). In the course of the process, Alex succeeded in outmanoeuvering both Andrew and Gerry with his claim that Anisi had chosen him to guarantee that his last wish be fulfilled when he had called for Alex and told him that he wanted to be buried in Tillenge, not in the public cemetery. What Alex was indirectly saying here was not only that he had been closest to

their father and that, consequently, he should take over the lead in the funeral proceedings, but also that Andrew, with whom Anisi had lived during the last part of his life, had not performed his duties towards his father correctly, and that he was, therefore, not worthy of heading the Tillenge group in the future. Tempers flared easily, and the situation even threatened to erupt into physical violence on one occasion, but the tension usually subsided quickly again. The pattern is not only typical in the sense that conflict was between agnates and siblings, it is also significant that the conflict was resolved, or at least contained, by the intervention of cross relatives, Alex's *agel anheil* Landime, for instance, who was able to placate Alex and make him lay down his bush knife and postpone the funeral to the next day.

Alex did not hold back in his criticism of Andrew, but he was more cautious with Gerry, and the same was true vice versa. Both men were aware of their situation and were conscious of the fact that to be able to carry out their plans for development in the village and establish themselves as leading figures in Warengeme, they were dependent on each other. More than once during the ten days that followed, they found themselves facing each other on opposite sides, but each time they showed restraint and were able to avoid overt conflict. The funeral was very much a public event and the contention between Alex and Gerry did not go unnoticed. Moreover, given the expectations placed in the two men, the other villagers were very concerned about the state of their relationship and frequently, on other occasions, their rapport was an important topic of talk amongst the men of Warengeme 2. From this aspect, it is significant to see how on one occasion towards the end, Alex raised the issue of his relationship to Gerry. This happened when Alex rebuked Gerry's wife Daina for her behaviour towards Nanguher. He took the opportunity not only to stand up for his sister Nanguher but, at the same time, he accused Daina of being the source of all the tension between himself and Gerry, and of trying to drive a wedge between the two brothers and set them at variance. In the way he addressed the issue he diverted the responsibility for their tense relationship away from himself and Gerry, and passed the blame on to Daina. In this way, a wife, and woman, was made the scapegoat, and the brothers' dissent was made explainable and rendered accountable. It was brought into focus with the stereotype view that brothers and men would not quarrel and fight with each other were it not for women and wives. In this way a threatening conflict was channelled into a pattern which is conceptually easier to grasp and more amenable to resolution.

One last aspect I should like to draw attention to in this context is the manner in which conflict between cross kin is liable to have immediate repercussions on tangential, parallel relationships and is apt to trigger off an agnatic conflict. The reference here is to Alex's two confrontations with his *meinheil* Uhane. The first incident followed his maltreatment of Rondi, Uhane's daughter, the second one was because Uhane failed to make any contributions to the funeral proceedings and expenses. In both cases Alex's brothers intervened in support of Uhane, who was also their *meinheil*, and with whom especially Gerry had a very close bond. This had the effect that the conflict was deflected away from the *meinheil* relationship and became one between siblings again. The two incidents show

how an unintended mechanism is liable to channel dissent into conflict forms which the cultural disposition is more attuned to and can manage more easily and for which it possesses more suitable means for containment or resolution. Dissent between cross kin has the tendency to expand into agnatic conflict which, in turn, is resolved through intervention of cross kin, usually an older *agel anheil*, very often also through a *ni ananei* (FZ).

After describing the events around Anisi's funeral, in which I hope to have shown how new forms and old patterns of social process and interaction become manifest, I turn to deal with two concepts which occupy a central role in the village discourse on change and development. These refer to the ideas of kastom and komuniti.

CHAPTER THIRTEEN

KASTOM AND KOMUNITI

The process of facing up to, and overcoming, the shackles of colonial and post-colonial encapsulation, and of attaining a status of equality with modern national Papua New Guinean society, runs on two interrelated levels. The first we could call modernization. It refers to the villagers' efforts to participate in the opportunities provided by the external system. These include the people's attempts to improve their economic situation through the cultivation and sale of cash crops; they recognize the importance of education and send their children to school, in the hope that at least some of them will one day make the grade and be able to support the village, either with the money they earn through salaried jobs or with knowledge and skills in business operations; they also participate in national, provincial, and local politics through voting, in the expectation that their candidate will succeed, and be in a position to help his electorate by securing financial and other resources in order to promote development in the area.

On the level of modernization it is the external agencies, the government, the administration, the business companies that are regarded as oppressive and unwilling to grant the villages full participation, and it is from all these that they are seeking recognition and equality. On the other hand, the villagers realize that, in order to attain parity with the external system, they have to undergo an inner change as well, and that they have to abandon their traditional cultural form. This dimension we can call transformation. There is the strong conviction at present that what, in effect, has been hindering them in achieving real change in the village until now is their adherence to traditional Wam culture. In this way, much of the resentment against the external system, and much of the frustration caused by failure to alter the conditions of their existence, is turned around and aimed at themselves. The internal versus the external opposition, the Wam versus the encapsulating system, is translated into a purely internal dilemma, and becomes one of the past versus modernity. What the Wam appear to be saying is that their encapsulators would have accepted them long ago as their equals if they had not been saddled with such an adverse and contentious cultural form. In order finally to reach this goal they have to radically discard their cultural heritage. In the present discourse on development and change, two catchwords reflect this dilemma: kastom and komuniti. The two terms are opposed to, and radically exclude, each other. Kastom stands for everything that is reminiscent of traditional culture, whereas komuniti reflects an ideal, a model of a future social and cultural form in which prosperity, equality and harmony prevail. As long as the villagers still adhere to kastom, the message goes, real komuniti cannot be established.

The notion of kastom is widespread in Melanesia and the Pacific in general today. It is not only used in different contexts but also on different levels of discourse, which reach from the national to the regional and the local. It has also become one of the major topics in Pacific anthropological discourse ever since Roger Kessing and Robert Tonkinson (1982) published *Reinventing Traditional Culture: The Politics of Kastom in Island Melanesia.* Their seminal work has been followed by a large number of insightful and thought-

provoking articles and readers centring on the issues of tradition, cultural continuity, history and custom in the process of colonization and de-colonization in the Pacific and the way in which indigenous peoples, their traditional leaders, but also their modern political representatives, have applied the appreciation of their own culture, or constructed views thereof, in order to to come to terms with the epochal changes they face (Jolly and Thomas 1992; White and Lindstrom 1993; van der Grijp and van Meijl 1993; Friedman and Carrier 1996;). It has become evident that the notion of kastom is often difficult delineate and define. For Schindlbeck (1990), working in the Dreikikir area among the southern Gawanga, the question of what actually constitutes kastom is not answerable. This is carrying things too far. Very much more to the point is Lindstrom's comment (1982:317) that "'kastom' becomes a symbol which everyone understands but on the meaning of which no one agrees."

On the national level, kastom can be used as a powerful symbol conveying the sense of a common heritage and therefore a sense of unity. Thus it is charged with positive values. In spite of the plurality and diversity of cultures in Papua New Guinea the reference to a common kastom implies that the different customs share more elements in common than divisive traits in the face of a foreign cultural system such as that presented by the Westerners or Asians. Thus, for instance, Bernard Narokobi's "Melanesian Way" (1980) presupposes a cultural foundation which all the cultures and peoples have in common, and which forms the fundament on which the modern nation of Papua New Guinea rests.

More frequently we encounter it in smaller settings where local cultures apply the notion of kastom in order to resist, especially fundamentalist, Christianization and the imposition of alien laws and institutions and thus to preserve a substantial degree of cultural autonomy and respect for indigenous concepts and modes of action. Kastom serves as a concept for negotiating between past and present. In both institutional and semantic domains it is used to contrast such imported ideas and practices as gavman (government), lotu (church), lo (law) (cf. Otto 1992), or bisnis (business) (Foster 1992). How compatible or incompatible respectively these categories in the end are depends on a variety of mediating factors such as historical experiences, the degree of penetration of the colonial and post-colonial order and the amount of disruption it has brought on the social and natural environment, and on the evaluation by the people themselves of how successfully they have come to terms with the altered conditions. In some cases the promotion of and adherence to kastom is regarded as the only answer to the deleterious effects of modernization, in others kastom and modernity have attained a delicate rapport where the canons of each category apply to more or less separate fields of social and cultural activity, in still others kastom is negatively evaluated and is seen as a legacy to overcome in order to enter into a new form of societal and cultural being. The Wam very definitely belong to this last category.

Among the Wam, the notion of kastom has a very ambiguous status. As a historical projection, the Wam are extremely proud of their kastom. They maintain that kastom – here specifically referring to the tamberan – originated among the Wam and spread out to all the neighbouring groups subsequently. The Urat, the Ilahita, Bumbita and Muhiang

Arapesh, and Gawanga versions are said to be merely copies of the original Wam tamberan. The same is true of a second cultural complex which is intricately related to the tamberan, that is sorcery. The Wam not only pride themselves on having been the most feared sorcerers of the region, and of possessing the most potent form of sanguma, but actually of having invented it in the first place. However, the valuation of traditional culture is restricted to the retrospect. This viewpoint is valid for the past but, at the same time, the Wam make it clear that they no longer wish to retain their kastom and that they have consciously put an end to it, and that they are in the process of adapting a new, more enlightened cultural form. The practice of kastom is no longer feasible because the two complexes, traditional culture and modernity and development, are not compatible. Unlike other examples from Melanesia, where tradition stands as a counter-force to modernity, the Wam see this differently. Kastom is viewed in a negative light and seen as being the main hindrance to the attainment of development and modernity.

Kastom is a far-reaching concept and practically any activity can be done in two ways, either the kastom we or the "new way", which simply means that the mode of procedure contains no traditional elements. In gardening, which entails the performance of a variety of preparatory rites, the application of diverse magical substances (generically termed *mianke*) to the yam and, imperatively, the observation of a variety of food and avoidance taboos, men are still inclined to follow the kastom we but less strictly, and more privately, than before. It is not a matter to talk about and, when asked, they usually maintain that they no longer observe the traditional gardening rules. The same goes for hunting although, in effect, there is little left to hunt. Much the same is true where the women's sphere of menstruation and childbirth is concerned. This too falls under the sphere of personal affairs, and it is left to the woman herself and her husband, or her parents, to decide on how strictly she should keep to the customary habits.

The concept of kastom in its negative dimensions gains more relevance as soon as it touches a social activity and acquires transactional properties, as in marriage dealings and death payments. Such procedures involve the aspect of formal exchange and, with it, the duty of reciprocation. Through this, the idea of competition creeps in and, in turn, opens the door for contention and, finally, conflict, when people fail to meet the obligation of returning the payments received. The epitome of exchange and competition is lodged in the sphere of the tamberan, and when the people explicitly address the imperative of putting an end to kastom they are specifically referring to the tamberan and the cultural habitus which underlies it. For the Wam, the tamberan represents kastom in its highest density and the secret male cult is thus diametrically opposed to the requisites of a new social and cultural form of existence. The rationale and knowledge concerning the interrelation of humans and nature, of human and natural fertility and strength, and the rules and techniques of controlling human and natural growth, which were, implicitly and explicitly, imparted by and transmitted through, the tamberan have largely become redundant in view of the incursion of a new epistemology through Western culture. What persists is the valuation of the tamberan in its social dimension, and the notion that it is the main forum for the accumulation of personal power and prestige at the expense of one's fellow men. The

tamberan today is inveterately associated with the creation of hierarchy and regarded as the central force that divides groups and separates individuals, and pits them against each other. It promotes contention and jealousy, the people say, and leads to disputes and conflict. Ultimately, the perniciousness of the tamberan is shown in the practice of sorcery. *Arukwineme* sorcery and the tamberan form an inseparable complex, and as long as the tamberan prevails, people feel, sorcery will exist and people will continue to die. Sorcery is the means by which men redress grievances and seek retaliation for perceived wrongs and injuries, and it is the way competitors call in outstanding payments from recalcitrant debtors. In this sense sorcery is redressive action, applied to set off the balance in an intermediately unequal relationship. But sorcery is also seen to operate in the opposite direction, as offensive action, where men in power use it as a means of coercion and of bringing people into line, or of removing troublesome competitors from the political arena.

The Wam have consciously put an end to tamberan activities, partly for the above-stated reasons of eradicating conflict and competition, partly due to the general reorientation towards business and development. Although the people are no longer actively engaged in tamberan activities – the secret trumpets have been discarded or destroyed, many kawas relations have been broken off – sorcery is still rife and people continue to die through *arukwineme*. The Wam explain this by referring to the ongoing prevalence of a basic kastom disposition in the people. They have got rid of the tamberan but the tamberan has not got rid of them. Although the tamberan is no longer practised, the Wam have retained a basic attitude towards, and view of, their fellow villagers which is characterized by egotism, rivalry and antagonism, and where sorcery is regarded as an apt means of retaliation and an effective method of coercion by men seeking status and power.

Although many older men look back on the past with nostalgia and, privately, tell of the thrills and excitement the tamberan contained, no one at present would claim to be a traditionalist, or to be in favour of kastom. Everyone professes to be oriented towards the churches, modernity and development. But, at the same time, and especially in moments of crisis or when communal projects fail, they blame each other for adherence to kastom, maintaining that many people are only using modernity as a rhetorical mask to hide their true ambitions, which include exploitation, the quest for power and the creation of hierarchy. Invariably, disputes or conflicts exceeding the domestic level are phrased in the terms of the dichotomy kastom versus modernity, and all the breaches of norms and conduct are, in the end, interpreted as a relapse into the old habits. Thus, conflict as such is equated with kastom.

In contrast to kastom stands komuniti. Likewise, it is a catchword, a term which everyone can subscribe to and nobody has to agree upon. It has been styled through modern political rhetoric and usage in the media and education. But it has also been coined by the Catholic church over the last few years, where the building of a "Christian community" forms an integral part of its development policy. The concept of komuniti conveys different meanings on different levels. It is used in a pragmatic sense to designate the modern village and its people on the one hand, on the other it is a notion or an ideal of a future form of living together in harmony and without conflict. At village meetings and

debates the villagers speak of Warengeme as a komuniti but it is not necessarily the komuniti they have in mind as a contrast to kastom. They live in a komuniti but they do not have komuniti.

I devised, and handed out, a questionnaire to twenty men in the village, containing seven questions on the concept of komuniti, with the explicit wish that they discussed the questions with other members of their hamlet before returning the questionnaire. I received back nineteen copies. It showed that there was some disagreement on the question to what degree Warengeme constituted a komuniti or not. Some answered with 'yes' because it displayed the formal or structural properties that belong to a komuniti: a group of people living together forming a political and administrative unit (the council area Warengeme), the presence of churches, and the existence of a number of development-orientated collectives. For others, these formal features were not sufficient to define the village as a komuniti. These people maintained that Warengeme lacked the fundamental properties belonging to a komuniti: unity and solidarity. For them it was precisely the presence of different churches and various development collectives that hindered the emergence of a modern komuniti. Although new in form, these institutions were actually conducting themselves in a typical kastom way: they were competing with each other and struggling for supremacy.

The people were in agreement that the formation of real komuniti demanded several prerequisites: the opportunity to participate in the monetary economy through cash cropping or other forms of business, the adherence to modern law, the presence of educational facilities, and the prevalence of the Christian belief and morality. In the absence of these, Warengeme would return to the customary status of a village. But the most crucial element for the establishment of a real komuniti concerned the presence of an authority structure in the form of a set of elected leaders. Only under strong and effective leadership would Warengeme be able to prosper and komuniti be able to develop. The greatest importance in this respect was assigned to the councillor, the village magistrate, and the local member of parliament but it also included the subsidiary leaders in the fields of the churches, the youth groups, and the bisnis groups. It was expected of the leaders that they took over responsibility for the village. They were here to regulate the interaction between the villagers and, by their own conduct, set an example for the people. When necessary, they should mediate in altercations and help to settle quarrels when conflicting interests clashed. Most importantly, as elected leaders they were to regard themselves as the servants of the komuniti, and not as its masters, and act accordingly. Komuniti was based on the notion of true equality. The villagers for their part were to show respect for their leaders, cooperate voluntarily with them, and accept their decisions. So much for the pragmatic view of komuniti, that is where Warengeme *being* a komuniti is concerned. The vision of Warengeme *having* komuniti goes distinctly further. However, the boundary between the pragmatic and the ideal is fluid, and many of the pragmatic notions actually implicitly presuppose the ideal.

Warengeme will attain the status of having komuniti, the notion goes, when all forms of major and minor conflicts cease. All the kross fait (quarreling and fighting) will yield to

wok bung wantaim (meeting and working together), i.e. cooperation. One of the indicators heralding this coming state of the village will be the cessation of sorcery in all its forms of manifestation. Sorcery will no longer be practised, and the people will no longer be divided by conflicting interests; instead they will share, and work towards, common goals. The attainment of such a form of living together implies a basic change in the present cultural habitus and the adoption of a completely new set of dispositions towards one another. Of the two prevailing codes of interaction, exchange will be abandoned and thus competition and rivalry, the source of all trouble, will cease. The code of sharing will predominate, and the people will cooperate and help each other through a sense of togetherness and shared existence. Egotism and self-assertion, which until now have shaped the pattern of relations between the people, will yield to altruism. Commenting on the concept of spontaneous community as an alternative to structured society, Victor Turner writes (1969:96): "It is though there are here two major 'models' for human interrelatedness, juxtaposed and alternating. The first is of society as a structured, differentiated, and often hierarchical system of politico-legal-economic positions with many types of evaluation, separating men in terms of 'more' or 'less'. The second, ... , is of society as an unstructured or rudimentarily structured and relatively undifferentiated *communitas*, community, or even communion of equal individuals ... ." He continues later on: "Essentially, communitas is a relationship between concrete, historical, idiosyncratic individuals. These individuals are not segmentalized into roles and statuses but confront one another rather in the manner of Martin Buber's 'I and thou'.... . Along with this direct, immediate, and total confrontation of human identities, there tends to go a model of society as a homogeneous, unstructured communitas, ..." (Turner 1969:131-132). What Turner describes for the idea of communitas in general corresponds with the notion of komuniti in Warengeme.

The concept of komuniti leaves no room for traditional components of the social system, such as kinship, wards, moieties or *serengel pinandil*. They are not compatible with komuniti because they are seen to divide and separate individuals and are directed towards exclusion rather than inclusion. The code of exchange is not perceived as creating lasting bonds between persons and groups but as disuniting individuals and imposing a differentiating structure on them within which they struggle and compete for status and power. The ideological blueprint for the envisioned komuniti is provided through the Christian belief and laid down in the Bible with its tenets of brotherly love, respect, compassion and modesty, which starkly contrast with the morality of kastom which emphasizes self-assertion ("mitasolism"), differentiation and the quest for status. In this new social form, all members of society will be included in one united, undifferentiated komuniti and social relations will be governed by a sense of cooperation, solidarity and harmony. So much for the vision.

In terms of modernization, Warengeme still falls far short of the ideal of komuniti. Although the village embraced the idea of change and modernity, modernization has not proceeded in the manner they expected it would. Although it is comparatively well equipped with modern institutions and resources (mission, school, road, cash crops), these have not brought about radical changes to life in the village. The villagers still feel treated

like bush kanakas by the agencies of the external system and thus have little faith in them. In the main, these include the government on the local, provincial and national levels, the administration which is responsible for such matters as education, health, and justice, and the business organizations like the Sepik Producers Coffee Association (SPCA) and the Lus Development Corporation (LDC) that command the marketing of their cash crops. The villagers strongly feel that these agencies – the gavman (government and administration) and the kampanis – are not fulfilling their part of the contract. Instead of it improving, the people feel, the situation is deteriorating. Indications in this direction are the rapid proliferation of crime – the raskol problem – the failure of the education system, and the stagnating cash crop economy.

During the last few years, especially the growth of crime has worried the people excessively. In earlier years, raskols were seen as being a phenomenon of the towns whilst the rural areas were still comparatively safe. This has changed recently, and violent crime has gradually spread along the highway and reached the villages. The villagers hear of robberies, killings and rape through the radio, and through informal channels and the hearsay of people returning from a day's outing to Maprik or Dreikikir. The raskols pose an immediate threat and they are likened to sanguma. Moreover, the people believe that raskols are using similar methods to sanguma, and that some sorcerers of the area have been recruited by raskol gangs to help them. What makes the matter even more ominous are the tenacious rumours that various government officials and local politicians are in league with the raskols, pulling the strings in the background. Such rumours have the strength of conviction not only because modern politicians are looked upon as corrupt and exploitive but also because such a collaboration fits the pattern of traditional power brokerage, where bigmen either applied sorcery themselves, or contracted sorcerers, in order to consolidate their positions or remove unwanted rivals from the field.

On the level of transformation, change is proving to be equally obstinate. Warengeme falls short of the standards of komuniti which are often so emphatically evoked in political rhetoric. When it comes to translating ideas into action, or achieving consensus on an issue which goes beyond the mere verbal acclamation of the komuniti idea, or taking decisions, the village fissions into a number of opposed and competing factions which themselves, in turn, display difficulty in taking up a unified stance on critical matters. The people's focus, and sense of allegiance, is still restricted to narrower segments of the polity and personal networks based on kinship, friendship, and residence. It is here that the code of sharing is valid and applied but it does not pertain to the village as a whole, as the ideal of komuniti demands it should.

The delegation of authority, as the concept of komuniti postulates, is not easily reconciled with the autonomy of the individual, which is such an integral feature of the Wam social system. Through election to office, the people nominally grant their leaders authority, and demand from them that they fulfil their part of the deal but, at the same time, they are unwilling to accept incursions into the sphere of personal autonomy and to submit to the demands of a wider collective.

This becomes evident on such petty, but still significant, occasions as the council work days, on which the men and women are requested to do work for the general upkeep of the village, like cutting grass along the road and around the school, building a new haus kiap (government rest house), or repairing the latrines next to the public meeting ground. Apart from keeping their own area of residence clean and tidy, the people feel very little commitment towards what are defined as public areas and buildings. Often the work is not done at all, or not properly, and this leads to reprimands by the councillor and those who happened to have contributed some effort on that specific day, against those who did no work, and to reproaches that the sense of komuniti is lacking. As such, these are minor incidents of contention but they tend to accumulate over the weeks and months and are then brought up in the context of other, more serious, altercations as pieces of circumstantial evidence. Backstage, often the failure to mobilize the villagers for council work is interpreted as evidence of the councillor's weakness and his lack of authority.

The reluctance to grant others decisional powers over oneself becomes more evident in the field of institutional conflict settlement. Today, two forms of official litigation exist. The first is the village court, which is presided over by the local village magistrate aided by his kuskus (clerk or secretary), and which handles a variety of minor offences. The most frequent of these relate to wife beating, property offences which often lead to fights or brawls, slander, and the utterance of threats. The legal code on which the village court passes judgement is laid down in the Village Court Act. The village court has sanctionary powers. Such sanctions usually consist of the payment of a fine and, sometimes, payment of compensation to the wronged party. Mediations, the second form, are a more informal mode of dispute settlement. They do not follow a fixed weekly schedule, instead they are held when necessity dictates them. This is the case when conflicting interests or claims clash but no clearly-defined offences have been committed, or when a quarrel has been smouldering under the surface for a long time and threatens to erupt into open conflict. Mediations are also held immediately after an incident of open conflict which cannot wait until the next official court session but has to be dealt with immediately. The most frequent issues dealt with at mediations concern disputes over marriage arrangements, rights and uses of estate, and accusations of sorcery. When mediations do not come to a satisfactory conclusion, matters are often brought up again later in front of the village court.

The role of chairing a mediation invariably falls to either the councillor or the village magistrate in their function as village leaders. On one occasion a mediation was held by the local MP. Such mediations usually begin on a small scale, involving only the conflicting parties and the mediator, but they tend to snowball and develop into large-scale disputes involving the whole village, especially when the issue is related to sorcery. Nominally, the aim of a mediation is to settle a dispute by reaching an agreement that is satisfactory to both parties. Actually, they often end with a more or less clear verdict as to who is guilty and who is the victim, and the transgressor is ordered to pay compensation. Significantly, this is often glossed over by what is called sek han (shake hands). This, however, is not merely a handshake signifying the end of animosity between the two parties; instead, it means that the wrongdoer "shakes the hand" of his adversary with the amount of

compensation laid down by the mediator. Thus, it looks as if the mediation has ended in mutual agreement and that all discord has been removed. In terms of accountability, the emphasis is on the symbolic act of handshaking. Although everybody witnesses the payment of compensation (and therefore who was in the wrong and who was in the right), this is not officially registered or recorded. In this way the appearance of consensus is created and this, in turn, is in accordance with the postulates of the komuniti discourse.

The notion that altercations between the villagers are settled by either the court, or a mediation, and that the litigants accept any decision taken by the village leaders in charge is central to the concept of komuniti. However, here again we come across the discrepancy between the ideology and rhetoric of komuniti, and the reality of social process. Official litigations may superficially settle a dispute but they seldom resolve the deeper conflict. They are merely able to contain it, hinder it from erupting immediately into a more violent form. Sanctions are accepted grudgingly, but under the surface the conflict goes on simmering. Both parties are aware of this. They might try to avoid each other as best as they can but, at the same time, they keep a watchful eye on each other's moves and actions. This kind of volatile truce can go on for weeks, months, or even years, until some irregularity in the flow of life brings the conflict back up to the surface and into focus. This can happen through a mishap or an accident, it can be the appearance of a piksa, i.e. a sign, most commonly it is triggered off by the occurrence of an illness or a death. Depending on which party falls prey to the misfortune, it is either interpreted as an act of retaliation, or else – if the party that lost the mediation is the victim – it is liable to be regarded as an attempt to exploit the situation and increase the injustice. In this manner the conflict is brought out into the open again and spirals. Almost invariably, sooner or later, it finds its expression in terms of sorcery.

Another point concerns the positions of the village leaders who are substantially responsible for shaping the outcome of mediations and court sessions. Seldom, if ever, is any confidence reposed in their impartiality, nor are they believed to be dispensing justice neutrally, that is independently of, and unaffected by, their personal relations to the litigating parties. Instead, the common view is held that the leaders exploit their role in mediating conflicts in order to promote their own interests and boost their own positions. This again, of course, runs counter to the ideals of komuniti. Strong leadership is a vital feature of komuniti but in Warengeme the leaders are said to be misusing their power in order to follow the aims of kastom.

Men of influence fall into what could be described as the leadership dilemma. On the one hand, they face up to the call for strong leadership and are nominally granted power but, on the other hand, their power is ineffective, and the villagers largely deny them the necessary confidence and support. Being nominally responsible for its well-being, they are liable to become the scapegoats of most for the village's shortcomings. They are blamed for the lack of komuniti spirit, the incidents of conflict in the village, the rising rate of crime, and the growing general feeling of insecurity. The leaders for their part, tend to put on verbal performances of strength and authority during meetings and other public events, thus raising the expectations and the measure by which they are rated. Rhetorical

competence, self-assertion – mitasolism – and the ability to dilate on the prospects of the near future are all prerequisites of leadership but in order to justify their claim to leadership they have to let action follow words. This, however, they very often fail to do effectively. Thus, the councillor announced publicly on several occasions that he was going to eradicate sorcery from the village. Each time this, of course, met with approval, and he was praised for his "strong talk". In one instance, he announced that he was going to push through a motion in the Dreikikir Local Government Council to have traditional divination methods reintroduced. On another occasion, based on the reasoning that the sorcerers were coming from neighbouring villages, or that Warengemes were procuring sorcery substances from outside, he placed the village under quarantine by ordering that everybody either coming to, or leaving, the village area had to report to him or the village magistrate and declare the motive for his journey. Both strategies failed. The first, because the councillor never raised the issue in Dreikikir in the first place, the second, because of the impracticability of the idea.

The result is a loss of credibility and confidence, and the erosion of the leader's base of influence. In such instances it becomes evident that, through rhetoric, ideological propositions gain a new dimension. Ideas acquire a different force when they are expressed in words. Words themselves become action. They set the standards by which the speakers are judged and by which they are made accountable for their words. In practice, village leaders usually fail to translate into effect what they claim to want to do, or what they are doing, partly because they postulate unreasonable targets, but to a larger extent because they are unable to rally enduring support from a substantial part of the village. Lack of rispekt (respect) for their leaders on the part of the villagers is one of the most frequent criticisms one hears. This, in turn, is countered by the villagers' accusation that the leaders try to place themselves above their fellow men and subordinate them, thereby displaying a typical kastom behaviour, i.e. they are transcending the code of equality. Due to the fact that the position of modern leaders are based on, and draw their legitimacy from, the political order created by the colonial and post-colonial establishment, these men are also seen to be the henchmen of the encapsulating system, and regularly suspected of misusing the power they have been entrusted with. In this way, village leaders come to represent the encapsulating system, and much of the resentment and frustration stemming from the failures of modernization are translated into the deficiencies of the transformation process.

Just as village conflicts tend to spiral and sooner or later find their expression in the idiom of sorcery, so village leaders too fall prey to the sorcery syndrome in one way or another. They are either threatened by sorcery or, at least, feel threatened, or else they are accused of applying sorcery, either personally or through hiring *arukwineme* to do their dirty work for them. Typical of this are the words the councillor spoke to his younger rival Alex Anisi – who had just been elected to the Provincial Parliament – during a large sorcery mediation, where he predicted that sooner or later he too would be accused of sorcery: "Alex, I tell you, now it's a new time, later they will say you do it too, you know the law of Warengeme."

The development discourse is foremost a political discourse. It does not deal so much with the technicalities of cash cropping, the marketing of coffee, the maintenance of roads or the problems of education, but rather with the political dimension behind these. Who is dictating the terms of development, both within and outside the village? Who is impeding the rate of change? Who promises improvement in the villagers' situation? The discourse takes place within the set of dichotomies kastom and komuniti, external system and village society, and leadership and followership. All efforts at modernization, the Wam feel, are being thwarted and rendered futile because the process of transformation has failed until now. The ultimate goal of attaining parity with the encapsulating system and, thus, of being given a fair deal by the outside world has not been reached, and is still far distant, because the Wam are incapable of granting each other equal status to start with. Instead they are still deeply enmeshed in kastom and preoccupied about competing with each other for supremacy and domination.

CHAPTER FOURTEEN

THE CHANGE MOVEMENTS AND PERVASIVE FACTIONALISM

The process of change is, to a large extent, a political process. Although each individual makes efforts to adjust to new the conditions (e.g. the monetary system), develops and applies strategies to meet the demands of a changing total environment (cash cropping, church, schooling), the process very much involves the village as a whole. As I have tried to describe above, there is the realization that change can only be attained if Wam society itself undergoes inner transformation. This entails a consensus as to what elements of traditional culture have to be discarded, and what new elements must step into their place, and through what novel means and institutions the social, economic and cultural process shall be regulated in the future; also, how the necessary amount of cohesion in the village can be sustained. The Wam have an ideal, if not even utopian notion, of what this new society should look like: free of conflict, no sorcery, no hardships but prosperity instead, in other words, komuniti. Over the years, and through confrontation with colonialism, the Wam have come to realize that transformation is more effectively achieved through collective and concerted action. That is, if the village subscribes to a common goal and combines its knowledge, resources and energy, and cooperates as a unified group, they are more likely to achieve results and reach their goals than if they operate singly and as individuals.

As in other parts of Papua New Guinea (cf. May 1982a), the Dreikikir area in general, and the Wam in particular, have experienced the proliferation of a number of local movements over the last few decades, which, although different in type and form, show a broad concern with the achievement of economic, social and political change through communal action. This type of communal response to encapsulation has taken on two forms. For one thing, it refers to the creation and growth of economically-oriented movements in the form of village cooperatives, business groups and, in recent years, youth groups, for another it includes a number of religio-political movements such as the Kirap-kirap movement, the Peli Association and, presently, the New Apostolic Church (NAC). Collectively, these types of village-based movements have been named differently by various authors. Gerritsen (1981:19) speaks of dynamic communal associations, for May (1982b:10) they fall under the term self-help movements, whereas Walter (1981:82) calls them community development associations. For my own purpose, I simply define them generically as change movements: firstly, because they are the products of change and only came into existence through contact with the colonial system and, secondly, because change is what they are aiming at: change of the economic, social and political order in the village, and change in the relationship between the village and the external system.

Under the heading change movements, I distinguish between what I call the millenarian movement on the one hand, and the Bisnis movement on the other. Both movements are active in Warengeme at present. Although they differ radically in relation to their operational fields, their organizational structure, and in terms of ideological rationale, they have certain broad features in common. Firstly, they are village or community based,

secondly, they both emphasize communal action, each in its own form, and, thirdly, the final objective or goal of their activities is the same: equality between the village society and the external system, and the creation of a prosperous, harmonious, egalitarian community. The two objectives are functionally interrelated. The fourth feature they share in common leads over to one of the aspects which also divides them and sets them in contrast to each other: they are ambiguous, or double-faced, in their objectives. By this I mean that the movements follow both explicit and implicit goals, and that these goals exclude and contradict each other.

On the explicit side both movements aim to redress the imbalance between the village and the encapsulating system, each on its own terms and by its own methods; the millenarian movement through communal spiritual action, the Bisnis movement through collective economic enterprise. They both postulate the need for a new social order, and rely on new organizational forms and principles for regulating interaction, and they both profess to be operating in the interest of village cohesion and integration. On the implicit side, however, both movements constitute political interest groups which harbour the design of redressing, or altering, the political order and the power relations in the village in their own favour. As such, they are radically opposed to each other. Each group claims for itself that it represents the correct way of progress and accuses the other of acting in a way which is detrimental to development and inimical to the ideals of the envisaged new society. Thus, in effect, the movements are not working towards village cohesion, but promoting fission and fragmentation instead. In this guise, the change movements operate as *factions*, and the overall pattern and nature of political processes in the village could best be described as *factionalism*. As the reader will recall, the traditional political bigman system was based on a factional order. In the following, we shall be dealing directly and indirectly with bigman politics and factions again but, this time, in a new guise. Although the outer form has changed, the process of factional politics and the bigman strategies and methods have remained very similar to the earlier pattern.

In reference to the difference between explicit and implicit goals, I must add one specification. Whereas the clear distinction is valid for the Bisnis movement, the millenarian movement displays a more complex configuration and is, actually, triple-layered. Overtly the millenarian movement purports to be a regular church, the New Apostolic Church, comparable to the other denominations encountered in the village. Its millenarian ideology and orientation is not public, accountable fact, although it is a common "secret" in the village. The members of the NAC do not make any reference to their millennial convictions in public, or frontstage, settings. The NAC is a church, they contend, and its explicit goals are the same as those of any other church. The millenarian quest is kept in the background and only articulated and discussed outside the sphere of public accountability. Therefore, it belongs to the region of implicit goals, to the same region, in other words, where the movement's factional characteristics are located.

Factions are what Boissevain (1968:550) calls quasi-groups. A faction constitutes "a coalition of persons, recruited according to structurally diverse principles by one or more existing members ... ". Factions are political alignments centred on a leadership figure or a

small clique of several individuals who exert influence to some degree and rank as leaders. Most factions "appear to have a core of persons who form the central organizational focus and between whom there is a higher degree of interaction and more role relations than with other members" (Boissevain 1968:550).

As Nicholas notes (1965:21) factions are "a troublesome form of organization", for analysis at least, because they are difficult to delineate and often do not have clear boundaries or criteria of membership. Whilst allegiance and cohesion at the core might be strong, factions tend to fringe out on the periphery. Often we find factional overlap, which means that members on the fringe are liable to have connections, or at least sympathy, with other, opposing factions. This is due to the circumstance that members are recruited on structurally diverse principles and that they, as members of a common faction, do not take a unified stance on all issues. According to Firth (1957:294) factions are highly "dynamic phenomena". They do not manifest themselves equally strongly all the time but tend to crystalize in moments of crisis and conflict, and then disappear from view again afterwards.

Nicholas (1965:27-29) notes five essential characteristics of factions. Firstly, factions are conflict groups. People align to form factions in the process of pursuing their disputes and quarrels, and village conflicts are carried out along factional cleavages. Often conflict is the actual *raison d'être* of factional membership. Conflict also explains why there cannot be only *one* faction in a political arena, there must be at least two. Secondly, factions are political groups. Even if such quasi-groups are ostensibly intended for some other purpose, and operate in other fields of activity (e.g. economic enterprise, religious activity), they constitute the entities within which much of the allocation, regulation and contestation of public power and influence occurs. Factions form the support groups of competing bigmen, or of those contesting the authority of men in power. This leads over to the third characteristic, namely factions are strongly centred on leadership, either on a single prominent man or on a small clique of influential men. Allegiance to the leadership core often forms the basis, and the rationale, of membership in a faction in the first place. An important point is that lateral allegiance, or connectedness, between the rank and file members of a faction is often low. The reason for their common membership is their relation to the factional core and its leader. The fourth point is that factions are not permanent groups based on some superordinate principle, such as descent, although factional leaders often rhetorically do draw on such devices in order to promote factional unity and commitment and underpin the legitimacy of its existence. The fifth point is that faction members are recruited on diverse principles. Membership is not automatic; a person joins a faction voluntarily or, sometimes, circumstances make it clear to him that it would be to his advantage to join. This can be for economic, political or religious reasons, or any combination of these, in connection with obligations from, and allegiance through, kin ties.

Where factions dominate the political life, and lay down the course of competition and conflict, we can speak of factionalism. Siegel and Beals (1960:394) distinguish between two forms of factionalism, schismatic and pervasive factionalism. The distinction is one of degree. Schismatic factionalism refers to "conflict between cohesive subgroups within a

larger group often leading to the dissolution of the group", whereas pervasive factionalism refers to a pattern where conflict is ongoing and where it involves more transient, and volatile, factions but which does not necessarily lead to the dissolution of the whole group. Factionalism in Warengeme is of this second type.

Pervasive factionalism displays a number of distinctive features (Siegel and Beals 1960:398-399). Among these there is usually agreement on what goals the group as a whole, in this case the village of Warengeme, should be aiming at, and heading for, but there is sharp dissent on the means and methods of reaching these goals. Moreover, the blame for failures is invariably passed on to the other. This is not only the case between opposing factions but often also true for intra-factional relations. This results in the tendency for factions often to split up into opposing and competing subfactions and can lead to the realignment of conflict boundaries and new coalitions. A second trait, noted by Spiro (1968:412), is the overall low degree of trust that prevails between members of a faction. This has largely to do with the fact that factions are leader-centred, i.e. the main ties are between a faction leader and his single followers, whereas the bonds between the followers are often volatile and weak. Men often believe that they are being outmanoeuvered by their fellow members. Another striking feature is the covertness of much of the factional rivalry. Confrontations do occur intermittently, and when they do they are often severe and bitter. But much of the time the rapport between factional rivals is untroubled, at least on the surface, and one frequently encounters a superficial politeness and a deceptive mask of friendliness between political enemies. At times, this makes it difficult for the outside observer to discern the boundary between allegiance and opposition. The covertness of factionalism also becomes manifest in the high incidence of rumours and gossip. They are effective tools in the political struggle. Many of the encounters of conflict are preceded by a phase of intense rumour proliferation.

Broadly speaking, there are three large factions in Warengeme. One is located in Warengeme 2, the other two in Warengeme 1. At the basis of this pattern lies the rift between the two lower wards, Wolhete and Talkeneme on the one hand, and the wards of Warengeme and Wohimbil on the other. On this level of political contestation, the people of Warengeme 2 regard those of Warengeme 1 as their adversaries, and in the face of this opposition Warengeme 2 forms a unified front. They can be grouped under the heading of what I have called the Bisnis movement, which subsumes the various village organizations engaged in primarily economic enterprise. The leaders of this faction are two younger men, two lineage brothers, from the hamlet of Tillenge: Alex and Gerry Anisi, whom we encountered earlier in the context of Anisi's funeral. Internally, however, there is much strife and dissent in Warengeme 2 and the Bisnis movement shows a strong propensity to split up into various, competing subfactions.

In Warengeme 1, the two factions are equally opposed to each other, as they are to the Warengeme 2 faction. The first group refers to what I have termed the millenarian movement and which takes on the outer form of the New Apostolic Church. Its members are recruited from both Wohimbil and Warengeme, and recruitment, significantly, crosscuts lineage affiliation. The movement is headed by a small group of men who

function as the church's priests and deacons. The second faction in Warengeme 1 is a more difficult group to categorize. It is a residual group, consisting of those people in Warengeme 1 who are opposed to the New Apostolic Church. They do not constitute an action group otherwise and their sole common denominator is their opposition to, and resentment of, the millenarians. For lack of a better term I propose to call them the government faction because its more prominent members are often accused by their opponents of being representatives of, and drawing their strength from, the encapsulating system and the post-colonial order. It includes a number of the village's bigmen and elected leaders, such as the councillor, the local member of the Provincial Parliament, the village magistrate, and a few leaders of the Catholic Church. As I just said, when not in direct confrontation with the New Apostolic Church, its members have only little in common and the front splits up into various separate interest groups which, however, are not necessarily opposed to each other. Three such groups can be made out: firstly, the representatives of the Catholic Church, secondly, the village magistrate and his small group of followers, and thirdly, what I call the Womsok group. This group comprises three brothers (and their followers), all of them prominent in the political arena. It includes the village councillor, the local MP and a prominent entrepreneur. Notably, the leaders of these sub-groups also entertain close personal relations with individuals in Warengeme 2 who, at times, and for certain purposes, become their followers. The same is true, of course, of the other factional leaders in the village as well, i.e. those of the millenarian and the Bisnis movement. The result is an intricate network of factional relations, and shifting coalitions and oppositions. Given the number of factions and sub-factions and the instability and flexibility of factional allegiance, viewing it from a purely arithmetical point of view, the number of combinatory possibilities of forming alliances which transcend, or crosscut, the basic factional allegiance is high, and in reality this number does not fall far short of the arithmetical possibilities. I shall be returning to this factional struggle towards the end of part two in more detail. For the moment it is sufficient to memorize the basic pattern of antagonism. For one, the Bisnis movement stands in opposition to the millenarian movement and, at the same time, is highly antagonistic to the Womsok section of the government faction (the elected political leaders). For its part, the millenarian movement is pitched against the government faction as a whole and is also opposed to the Bisnis movement of Warengeme 2, but to a lesser degree.

Over the next two sections of this study I deal with the two change movements extensively. I discuss them, firstly, with a mind to the overall topic of equality and power in changing Wam society in its double sense, that is external equality and internal equality, but, secondly, as manifest forms of modern social organization in the village and as manifestations of socio-cultural change. The change movements are not only central themes in public discourse in all its forms, and the forums in which much of the political process is shaped, they also occupy the villagers heavily in very practical terms, that is in terms of time and energy.

I begin with the millenarian movement. Here the emphasis is on the ideological dimension. The issue of equalness refers to equality with the encapsulating system, the

manner in which present inequality was established in the first place and how it is sustained, and by which methods the villagers envisage balancing out the relationship in the coming future. In the description of the Bisnis movement that follows, I deal with the question of equality more in its internal sense. Whereas the NAC presented a more or less united and cohesive group, the Bisnis movement displays many more features of factionalism and internal power brokerage. It presents the forum and means through which a number of individuals strive for power and influence under a superficial gloss of modernity and progress. Here the emphasis is more on the social relations within the movement and the ambiguous relationship of equality and power between the movement's central figures.

SECTION FOUR:
THE MILLENARIAN MOVEMENT

I treat the millenarian movement in three chapters. In the first (chapter 15), I offer a brief synopsis of the earlier movements in the area since the Second World War and give a short outline of the history and creed of the (official) New Apostolic Church, and its position in the village.

In the second chapter (16) I deal with the millenarian ideology that fuels the movement. I begin with a modern myth, the myth of the two Wam brothers Gai and Apel, which tells how, in the mythical past, the Wam possessed the power of creation – the power to be understood as an unending source of material production and affluence and the capacity to shape the course of events in the world – and how this power was lost to other worlds. I go on to describe where and how this power is still active, how the Wam are being hindered in regaining possession of it, and who is opposing them in their endeavours. The key to repossessing this power and, thus, not only to acquiring material prosperity but, first and foremost, equality with the modern outside world is in the hands of the New Apostolic Church. Next I describe how the followers of the movement interpret the inscape of the New Apostolic Church and bring it to blend with their own world view.

In the present movement, millenarian action is restricted entirely to church activities. There exists no ritual instrumentarium other than the liturgy laid down by the official New Apostolic Church. Here lies a significant difference from the earlier movements in the area which attempted to change the course of events through ritual and action. In the third chapter (17) I deal with the organization of, and the activities, in the church and take a closer look at the sermons which form a central part of the church services. They contain not only critical assessments of the status quo of inequality, but also, inferentially, the prospects of the future to come. The chapter ends with a short summary and analysis.

I must make one last remark at this point. In the text, I frequently use such phrases as "the Wam believe..." or "villagers feel that...", or "the people say...". When I do this in the context of the millenarian ideology and beliefs, I am referring more specifically to the followers of the millenarian movement, and not to the people of Warengeme in general. There are many people in the village who describe the millenarian doctrine as nonsense, and do not share NAC's world view. Others might profess their disbelief publicly, but are not completely convinced of the fallacy of all the NAC's tenets. The description of the millenarian beliefs and ideas here is the result of numerous and long discussions I had, mainly with the leaders of the movement.

CHAPTER FIFTEEN

THE EARLIER MILLENARIAN MOVEMENTS: A SYNOPSIS

The history of the millenarian movements in the Wam area goes back to the 1950s. In a report, Patrol Officer Martin (1952/53) talks about a cargo movement in the Dreikikir area which centred around a figure called Suahe, who called himself "King", but Martin's reference is the only one to mention him, and in the Wam area itself his name is not known.[1] The first real movement, which is also documented in other sources (Allen 1976), was the Kirap-kirap movement, which centred around the two central figures of John Wahute of Selni village and Mahanung of Tumam, an Urat village just south of Dreikikir. Wahute is still alive and lives in a hamlet of Selni village in the Wam area. Being a native of the area, it is clear that Wahute played the central role in the movement for the Wam people.

Kirap-kirap is Tok Pisin and literally means "get-up get-up". The movement received its name from one of the central issues, namely the raising of the dead. Basically, the Kirap-kirap movement was an anti-sorcery campaign. Wahute believed that the only thing that impeded the Wam from reaching a status equal to the whites, was the widespread practice of sorcery. Wahute claimed that he had the gift of becoming possessed by what he called the "wind of God". It was in this state of altered consciousness that he was capable not only of raising the recently deceased victims of sorcery but, at the same time, also of identifying the sorcerers and unmasking them in public and forcing them to hand over their paraphernalia and renounce their evil deeds.[2]

The movement spread through the villages of the Dreikikir area, with Wahute appointing men and women as his helpers who showed the predisposition of becoming possessed. These people were labelled win man and win meri (wind men and wind women). However, the Kirap-kirap soon came to an end when the principal figures were arrested and jailed by the authorities, an act that Wahute did not understand at the time since he believed that he was acting in the interests of the administration. He now, of course, understands that the whites had no interest at all in allowing the New Guineans to become equal.

Since then, Wahute has lost his power of receiving the "wind of God". He blames his wife for giving him foods which "closed his eyes". He is still very preoccupied with existential questions, such as the status of traditional culture and the source of wealth and power. Dating back to his time as a labourer with Oil Search Limited in the 1930s, he is still in search of the Golden Rings, which he believes are the origin of all wealth and are hidden away in the area of Mehet, and which he believes the geologists and surveyors of Oil Search Limited were looking for.

In the village he is approached with a mixture of ridicule and awe. He is generally known as a spak man (a weirdo, a mentally deranged person), and the women and children are especially afraid of him, regarding him with a certain wariness elicited by his earlier activities. He is usually present at all important public meetings and sorcery mediations in Warengeme and Selni, where he does not hesitate to speak up even on delicate matters

which are often shrouded in the secrets of the tamberan or sanguma sorcery. It appears that his rather singular status as "deranged prophet" frees him of the normal conventions and customs concerning the disclosure of secrets.

During the seventies he was an active member of the Peli Association. On the occasion of Mathias Yaliwan's and Daniel Hauwina's – the two most prominent leaders of the movement – visit to the Wam area in December 1971, Wahute was one of the men that accompanied them to Mehet in search of the "throne of God". Today he is a member of the New Apostolic Church, but he is not one of the active leaders. In fact, his relations to the NAC are rather ambiguous, and in some ways he prefers his own private quest for the secret and truth of power and wealth.

The 1960s were an uneventful decade in terms of millenarian activity – a fact which is probably also due to the rapid expansion of cash cropping, i.e. coffee growing, and the high hopes people placed in the new venture. It was also the time of the expansion of business groups and larger cooperative movements like the Sepik Producers Coffee Association (SPCA). Again, in the early seventies the Wam, along with many other areas in the East Sepik Province, experienced the spread of the Mount Rurun Movement (Gesch 1985:2), or what is otherwise generally known as the Peli movement or Peli Association (Allen 1976:267). I shall not deal at length with the Peli movement as such since it has been covered extensively in other sources.[3] I shall only treat it in so far as it affected the village of Warengeme and the surrounding area.

To what extent the villagers of Warengeme and, to some extent, other settlements joined the Peli movement is not quite established. Both Allen (1976) and Bartlett in his Patrol Report (1971/72) agree that in the upper Wam villages, viz. Selnau, Aresili, Tumambe, Bengil and also Selni, 90 to 100% joined the movement. Both authors also agree that in Bana and Woreli hardly anyone became a member. They put this down to the opposition of the councillor at the time (who was still the councillor in 1988). Bartlett says the same was true of Luwaite. Nor, according to Allen, did very many people join from Hambini, but he gives no specific reason why this should have been so.

The data for Warengeme is rather more contradictory. Allen states that in Warengeme approximately 90% of the population also became members, whereas Bartlett maintains that Warengeme 2 did not join, which, expressed in percentage, would mean that only approximately 55% joined. In a later Patrol Report, Galwyn (1972/73) says that only councillor Landihi and his family from Warengeme remained outside, but, naturally, the term family in this context is a very flexible category. My own research did not completely resolve the contradictions since many people were very reluctant to speak about their past involvement in the Peli movement or, in some cases, gave false information. Nobody in fact, except the active members of the New Apostolic Church, freely admitted to having been a member. The pattern that develops from the information I gathered, however, shows that, with very few exceptions, the people from the wards of Wolhete and Talkeneme did not join the movement. Furthermore the centre of the movement was clearly located in the ward of Wohimbil, whereas Warengeme ward seems to have been

split on the issue. Thus, the recruitment pattern is nearly congruent with the membership configuration of the present New Apostolic Church.

Membership cut through lineages and family groups and there were also some very prominent men from Wohimbil who did not join. In the Womsok lineage (P1), the largest lineage in Wohimbil and also the most numerous of total Warengeme, it was the same individuals that joined Peli that are now the active members of the NAC. At the same time, there are a few persons that used to be followers of the movement that are now the NAC's most ardent opponents.

The Peli movement did not only differ in terms of content and doctrine from the earlier Kirap-kirap movement but also in organizational structure. Whereas the Kirap-kirap was more a loose following around a prophetic figure, the Peli movement displayed a more structured organization with its committees, flowers, workers, ritual centres and prescribed rites. In Warengeme the cult centre was the hamlet of Tubilme in the ward of Wohimbil. There the haus paua (power house) stood, and in the stockaded hamlet the followers held their meetings and prayer sessions, and conducted their various rites. In Warengeme, at least, the people did not leave the Catholic Mission during the period of Peli activities. Today they still emphasize that to them the movement had nothing anti-Christian or anti-church about it. The Peli followers still went to church services and prayer meetings, and the resident Catholic priest quite frequently visited the Peli centre in Tubilme. I have not been able to find any references concerning the rate of exodus from the traditional missions. Both the administration and the various missions were very critical and opposed to the movement, but for many villagers it seems, there was nothing contradictory in belonging to both the Peli Association and one of the missions.

For the Wam people, one of the climaxes of the Peli movement was the visit of Mathias Yaliwan and Daniel Hauwina to their area and their subsequent trip to Mehet[4], on which they were accompanied by some of the more prominent Wam leaders. In their search for the "throne of God" in Mehet (cf. Allen 1976:273), Yaliwan and his followers felled a large tree, which the people said represented the old Testament and which in itself stood for kastom and the tamberan. In its place they planted a new tree which, correspondingly, stood for the new Testament and symbolized the "word and law of God". For the Peli movement as a whole, based in distant Yangoru, this act does not seem to have been of any special significance, but for the Wam people it had the same meaning as – or at least a similar meaning to – the famous removal of the stone markers on Mount Turu on 7th July 1971. For them the stone markers on Mount Turu and the old tree in Mehet formed the two jaws of a vice which was holding the New Guineans imprisoned, and keeping the arrival of the expected millennium away from them. The fact that nothing happened even after both shackles had been thrown off is explained in different ways. Some people believe that the markers on Mt. Turu were actually never removed, or that Yaliwan and his followers had, at least, removed the wrong ones. Others, the majority, believe that the failure of the movement was due to the growing influence Daniel Hauwina had in the movement in general, and over Mathias Yaliwan in particular. If Yaliwan had had his own way, the people say, "something would have happened".

In Warengeme, the Peli movement came to an abrupt end when a big fight broke out between Peli followers and opponents. The fight erupted when a prominent man of Wohimbil, who was not a member of Peli, found out that his daughter had been recruited as a "flower" and had been taken to Tubilme. What started as a dispute between the father and the leaders of the movement soon developed into a full-scale village brawl, after which 28 men were arrested by the police and sent to Maprik to jail for six months. By the time they were released from jail, the Peli movement in general had lost much of its impetus, and the village returned to its normal routine again for the next ten years, at least on the surface.

The seventies were an eventful decade for the whole of Papua New Guinea, and its people experienced many changes, starting with the institution of self-government in 1972. In the following years the people also saw the coming of the village court system, the arrival of Independence, and the start of the provincial government system in 1978. Furthermore, the Catholic Mission opened its station in 1970, and two years later the Aresili Community School was opened. It was a decade during which the people had to adapt to and come to grips with novel concepts and new institutions. Although the fresh situation was, at times, met with scepticism and anxiety, the changes were on the whole attended with great hopes and aspirations. In Warengeme, especially, these years are depicted as a period of optimism. This view is, to a certain degree, linked to the name of Father Karl Heintges, the first Catholic priest on the station, who not only showed great activity on the spiritual side but also in terms of economic and social projects which he initiated and in which the villagers enthusiastically participated.

However, the seventies came to an end, and Father Karl left Aresili station and, fundamentally, nothing had changed in the village. It was at this time that word spread in the Wam area that a new mission had come to Papua New Guinea and had started working in the province. This new mission was the New Apostolic Church.

The New Apostolic Church, which, according to a pamphlet, is active in more than 150 countries in the world and has more than 1.5 million followers (Eggenberger 1983:125) is an off-shoot of the original Catholic Apostolic Congregation, formed around such men as Henry Drummond, Edward Irving and John Bate Cardale in England around 1832. Its aim at the time was to found a spiritual community which was closer to the ideals of the Early Christian Church, from which the established church had become alienated over the centuries, and to prepare its followers for the imminent return of Jesus Christ to this world. One of the main features of this new church was the appointment of apostles, which was accomplished on the basis of the prophetic revelations of one of its leading members. By 1835, the twelve apostles had been appointed and the new movement spread over into continental Europe, especially to Germany and the Netherlands.

However, by the 1860s the expected event (the return of Christ) had not occurred, and when the first apostles died, the question of their replacement arose. The original Catholic Apostolic Congregation adamantly refused to appoint new apostles, maintaining that this would be counter to God's provisions. In northern Germany and the Netherlands, several parishes independently named new apostles and this led to schism. There followed a long

period of friction and fission, and it was not until the turn of the century, under the Chief Apostolate of Herman Niehaus, that the New Apostolic Church was consolidated and received its present name. It began to spread out to all parts of the world, and today it is represented on all continents with strongholds in Central Europe, South Africa, Kenya, Uganda, the Indian sub-continent, as well as Canada and the United States. Papua New Guinea was one of the last countries the NAC set foot in. The number of apostles has in the meantime risen from the original twelve to 106 (in 1983) (Reller and Kiessig 1985:317).

The New Apostolic faith rests on two central pillars (cf. Reller and Kiessig 1985:311ff). One is the belief in the imminent return of Jesus Christ to this world. Although no exact date is ever given for this eschatological event, it is clear that the return of Christ is neither understood in a mere metaphoric sense nor is it planned for a yet unforeseeable future. It is expected in the imminent or at least fairly near future.

The second pillar concerns the existence of living and genuine apostles. The apostolate displays a very clear and strict hierarchical order. It is headed by a Chief Apostle. This position was held at the time of research by Chief Apostle Urwyler from Zürich in Switzerland. He is followed by a number of district apostles (for the various countries and regions in the world), and these again are seconded by apostles. Further down the hierarchy there follow evangelists, priests and deacons. It is through the living apostolate, structured to reflect the organization of the Early Christian Church, that God's will is believed to work on earth.

The New Apostolic belief is laid down in a creed consisting of ten articles of faith. Of the three sacraments – baptism, holy communion and sealing – the last is the most important. Whereas the former two can be performed by evangelists, priests or even deacons, sealing can be done only by an apostle. Through laying hands on a new member's head, the Holy Spirit passes through the apostle, flows into and becomes manifest in the neophyte. Only through the act of sealing can a member expect redemption on the Day of Judgement.

The living apostolate and the holy sacraments, with the unique rite of sealing, confers on the New Apostolic Church a proximity to God that other churches and denominations are denied to possess. Consequently the NAC regards itself as the only true church and the group of the chosen few that will receive salvation (according to the Revelation of St. John the Divine).

The New Apostolic Church came to Papua New Guinea from Canada. It first appeared in the East Sepik Province in 1977 in the Yangoru-Sassoya area. The Canadian missionaries came into contact with Daniel Hauwina and the dormant Peli movement and the two, although never officially, soon merged. Daniel Hauwina became an NAC priest, maintaining that in a dream, some years before, the advent of an Apostolik Sios had been prophesied to him. Both sides vehemently denied that the NAC and the Peli Association were one and the same thing (Camp 1983:88), but to the majority of the people it was clear that the NAC had come to fulfil what the Peli movement had promised and started.

Consequently, many of the earlier Peli followers drifted to the new mission. Mathias Yaliwan himself did not become a member.

The pattern of diffusion of the NAC in the East Sepik Province is not known. However, it spread quite quickly out of the Yangoru-Sassoya area to Maprik and beyond, even as far as Suain on the north coast between Aitape and Wewak. It reached the Wam area in 1982, probably not through the densely populated area along the Sepik Highway where the Seventh Day Adventists, the South Seas Evangelical Church (SSEC) and the Assembly of God are strongly represented, but through the less populated area along the coast and through the villages of the coastal range. The first time the people of Warengeme heard of the NAC in the area was from Womsok, a village to the north-east of the Wam. Two men, Lawrence Peimel, one of the present NAC priests, and Nimbalme, one of the older, former leaders of the Peli movement in the village, went to Womsok to hear about the work of the New Apostolic Church; shortly afterwards they were baptized there.

After Lawrence Peimel had been ordained as a priest, the two men soon began proselytizing in Warengeme and they quickly gathered a substantial following. It was mainly recruited from the same village segments that had previously actively supported the Peli movement, i.e. from Wohimbil and from parts of Warengeme ward. For the first year to eighteen months, the newly-formed congregation held their services and prayer meetings in the old cult centre of Tubilme.

Early in 1984, the NAC members – their number had constantly been growing – started building a new church at the junction where the road to the mission station and school branches off to the village of Selni. According to the councillor of Warengeme, Gista Happali, who is a self-confessed member of the NAC (although he is never to be seen at church) but, at the same time, a bitter rival and opponent of some of the NAC leaders, it was his idea to build a church out in the open, with the intention of refuting all rumours that the New Apostolic Church had any connections with the old Peli movement or had anything to do with cargoism and cultist activities. This, however, was no more than a clever political move on the councillor's part, since the link between the NAC and the old Peli movement was not merely a rumour in the village but a known fact.

Whilst during the era of the Peli movement its members had remained in the Catholic Church and even actively participated in its rites, they now broke away from the Catholic Mission. Great emphasis was placed on the fact that the New Apostolic Church constituted a church in its own right, with a clear identity of its own, and with a clerical organization, a liturgy, and a message that was distinctly different from that of the other denominations in the village, i.e. from the CC and the SSEC. In this they were successful. When I began fieldwork in October 1984 it was official that Warengeme had three churches of equal standing and rank. This became evident from such minor but ominous details that not only Catholic prayer leaders or members of the SSEC were asked to open public meetings with a prayer, but also priests and deacons of the New Apostolic Church.

In 1988, the NAC numbered approximately 110 members, 44 adult men and women, the rest were children and adolescents. In size it was second to the Catholic Church, but outnumbered by far the third denomination in the village, the SSEC, which had only about

25 members in Warengeme. Although the NAC was smaller in numbers than the Catholic congregation, it formed a much more cohesive and tightly-knit group, primarily because it met with so much scepticism and opposition from other segments within the village. Unlike other villages, such as Aresili, Selnau, Bengil and, to a certain extent, also Selni, which were NAC strongholds, the NAC followers in Warengeme were in the minority, albeit a strong minority. With the exception of five people, the NAC recruited its members from the wards of Wohimbil and Warengeme. Apart from one man, the leaders of the movement were from Wohimbil ward. The NAC was clearly perceived as a movement specific to Warengeme 1, although it theoretically was open to anyone. Warengeme 2, in contrast, was regarded as solid Catholic territory. Not all the people of Warengeme 1, however, belonged to the NAC. The CC had a very strong following there as well, and the loudest and most tenacious opposition against the NAC came from segments in Warengeme 1. The members of the SSEC held a neutral position.

It would be an apt solution if I could claim that all the members of the New Apostolic Church were recruited from immigrant lines and that, thus, their membership in a millenarian movement was a response to their underprivileged status in the village. The matter, however, is a little more complex than that. Quite a substantial number belong to original lineages who do not face the problem of land shortage and do not have to worry about the future. It would be more fitting to describe membership in the NAC in a broader sense and say that, to a large extent, it consists of members from segments who are marginalized in one way or another. This certainly includes villagers from immigrant lines, even the majority I would say, but it also refers to members of segments who have no political voice in the village. Also, it includes older men and women who have become disillusioned over the decades of encapsulation and have no faith left in the potentials of cash cropping and bisnis; it includes second wives from polygenous households where the husbands, together with their first wives, visit the Catholic Church[5]; it includes people who have been struck by fate in some way, while belonging to another denomination, and who hope to fare better in the new church; others are liable to join in order to delimit themselves from elder siblings who, possibly, are prominent members of the CC; it also includes young educated men who have returned to the village only to find that their kinsfolk and fellow villagers do not appreciate their education unless it promises a salaried income. All in all, it is quite a heterogeneous group. The common denominator they share is their opposition to the current village leaders and their conviction that the way matters are developing at present will not lead to change and komuniti.

Denominational fluctuation was moderate but displayed a clear pattern, in the sense that the flow was away from the Catholic Church and in the direction of the two other denominations. Many people begin their church "career" in the Catholic Church but, at some point – often after distressing events such as illness or a death in the family – move away and join either the NAC or the SSEC. Thus, in a sense, both NAC and SSEC profit from the basic religious education the Catholic Church gives its followers. Three of the NAC leaders, for instance, had previously been active church leaders in the CC and brought with them their knowledge of the Bible and experience to the NAC. Not a few

NAC members describe themselves as belonging to both churches. Although they participate actively only in one church, they retain the claim of affiliation to the CC on the basis of their earlier membership, and also with the argument that, in the end, it does not really matter what church one belongs to, since there is only one God.

With the exception of a very small minority – a number of old men and women – everybody in Warengeme declares himself or herself to be a member of one of the churches. The most prominent of the non-churchgoers is the village magistrate, Hiale. He is frequently reproached for this, mainly by the followers of the NAC, who believe him to be, and often accuse him of being, one of the active sorcerers in the village and an adherent of kastom. He himself defines himself as a Christian.

NOTES

[1] cf. Worsley 1957: 100 who refers to a Black King Movement that was encountered in the Sepik District and in the area around Aitape before the Second World War.

[2] The first person Wahute is said to have revived in this way was his own daughter. Many people still alive were witness to this act.

[3] cf. Gesch 1985 for literature on the Peli movement.

[4] Mehet is an Aruek speaking village, northwest of the Wam, cf. map 1.

[5] Husbands and wives from polygenous households are tolerated in the CC but they cannot be officially baptized and they are not permitted to receive the holy sacraments.

CHAPTER SIXTEEN

THE MILLENARIAN IDEOLOGY

As stated at the beginning of this section, I start this chapter by recounting the myth of Gai and Apel. The story forms a part of the common body of millenarian knowledge, although it is never officially narrated or discussed at length on official occasions and meetings of the New Apostolic Church. It constitutes the foundation of the millenarian ideology and it explains and legitimizes why the Wam believe they have a right to participate in the affluence and prosperity of the world. Most important, it also renders an account of how the Wam lost their unique capacities to create and produce at some early mythical stage in the past, and explains the present status quo, where hierarchy reigns: hierarchy in the Wam's relations to the outside world, but also hierarchy within their own society.

THE MYTH OF GAI AND APEL

The myth was recorded on tape on 27th January 1988. It was recounted by Lawrence Peimel in the presence of a number of other NAC followers in Tok Pisin. In order not to distort the myth anymore than necessary through translation, I have tried to reproduce a near-to-verbatim translation of the Tok Pisin version.

"In this story there were two brothers, There were two brothers, and Gai, he's the man that started all the kastom, this is how it went. He told his brother.... no it really went like this: their mother was cooking food. She was cooking food in her earthenware pot. She sent her two sons to fell a tree, but I've forgotten the name of the tree, it was a big tree. 'Go and fell this tree and build a canoe', she told them. So, the two went and felled the tree; they each stood at one side of the tree and felled it with their stone axes. They went on working like this the whole day, until the sun went down. In the meantime, their mother had cooked food for them. She dished it out into two bowls, covered them up, and placed them on a shelf. The two brothers came home and ate the food. Gai [the elder] enjoyed his food and thought it tasted very good, but Apel [the younger] said 'oooh, this food is not good for me', and he felt like vomiting. That is how it went. They went to sleep, and in the morning their mother sent them back to work. The two went back, and the mother stayed and prepared their food again, and dished it out into two bowls. The brothers worked all day, and at about three or four o'clock they finished and came back to the village, where they went to fetch their food. They ate, and again Gai felt it tasted very good, but Apel again thought it didn't go down well, and he wanted to throw up again. They went to sleep, and in the morning their mother sent them back to work on the canoe.

So they went back to work, but this time the younger brother Apel told Gai to hold an axe in each hand, so that everybody would think that there were two people working. Gai did this, and Apel crept back to the village and climbed up a tree which overlooked their hamlet and the spot where his mother usually worked. He wanted to see what was

going on, because each time they came back in the evening for their meal, all they ever saw was the cooked food, but they never saw the remains of a fire, or a cooking pot where their mother had allegedly cooked their food, they also never saw any food stored away anywhere, and all they ever did see was their mother sitting there and working on her bilum (string bag), but no fire, no cooking pot, only the cooked food.

So Apel went up this tree and waited for his mother. Then he saw her coming. She fetched her cooking pot and started peeling yam – these just appeared from nowhere, out of the blue – and put them in the cooking pot. When it was full she covered it up with leaves. After a while she looked into the pot and checked the food, but the yam was still completely raw. She covered up the pot again and waited for the food to cook. After a while she checked again, but still the yams were uncooked, they were still completely raw. Then she stood up and started looking around, then she saw him sitting up the tree. 'Oooh that's just fine, oooh, just look at my good son sitting up there. So, you've just had your food for today, you poor little devil, I've got nothing more to say to you'. Apel climbed down and went back to where his brother was still working on the canoe, and started work again.

As soon as her son had left, the mother got up again and covered the pot, and in no time the food was cooked. She removed the food from the pot and hurriedly made the soup, which she then dished out into one bowl which she put on the shelf. Then she herself ate. She sat down and started working on her bilum. Then her two sons came back from work. They went to look for their food and found only one dish. Gai helped himself to half and gave the other half to his younger brother. Then they all went to sleep.

Early the next morning, the mother rose first and went straight to Mehet. There they were building a house tamberan. Alright, so the mother, Yelebiel is her name, rose early and left for Mehet. The other two were still asleep when she got up and left for Mehet. The two sons stayed, but they didn't go to work on the canoe. The older brother told his younger brother 'leave it for the moment, you come and help me plant food in the garden'. So they went to plant food in the garden, and when they had finished, the elder told the younger, 'alright now, let's go and find posts for the new house tamberan'. The younger followed his brother and they went to find posts for the new house tamberan. They had cut about three posts when the news reached them from Mehet that their mother Yelebiel had died there. Apel didn't feel like cutting posts any longer, but his brother Gai kept on working. Apel felt too sad, so he left his brother and hurried off to Mehet, to see and mourn his dead mother.

He fetched some limbum (palm spathes) and some vines, and made a bed. Then he tied up the body and hauled it up onto the bed and left it to rest there. Then he went back to Sembaua and went to see his brother Gai. He told him of their mother and how he had prepared her body, and told him that he would have to come and help wash and bury the body. At this Gai became very angry, and he took a piece of wood from the fire and hit Apel with it. He was furious and shouted, 'what do you want to go there for, she's dead and that's that, it's no concern of mine. I've got enough work to do and

you're going to stay and help me build this house tamberan'. At this, Apel sat down and told his brother a second time that they should go to Mehet the next day. 'I've built a bed for her', Apel said 'and laid her body on it, tomorrow we'll go and wash her, make a basket for her body and bury her'. Hearing this, Gai rose and beat his brother a second time, hitting him on the head with the log from the fire. 'I don't want to listen to your talk any longer', Gai shouted 'what did you go to Mehet for in the first place? She's dead and that's that. It's her problem and I've got nothing to do with it, besides, I've got a lot of work and you're going to stay and help me. We've got a house tamberan to build and we've got food to plant and to build a storehouse to put away all the yam'. But Apel wasn't listening.

Early the next morning he went to collect some coconut leaves in order to make a basket. He went to cut some bamboo and filled them up with water. Then he left for Mehet. He washed his mother's body and put it into a long basket he had made, and left the body lying there. He remained in Mehet and started working on a canoe, a very big canoe. He worked on it for many days. During the day he worked on the canoe, and in the evening he came back [to the body] and slept. The next morning he would rise again and go to work. He finished the outside of the canoe and began working on the inside, using the midrib of a coconut leaf as a measure. This went on like this for many days. Then he hauled the canoe down to a little creek which was carrying very little water. He fastened the canoe to a branch and went back to the spot where his mother's body was lying. He opened the basket and took out the bones of her body, and put them into the basket he had made of coconut leaves. He then carried the basket down to the canoe and put it inside. At that moment, the canoe shot off and carried him far away. He went as far as Vanimo[1], passed Vanimo and even further until he came to a spot where he landed. He took the bones from the canoe and put them down onto the ground. He looked around and thought to himself, where should I build a camp for myself? Then he took one bone from the basket, the skull, left the others and went to look over the land. He came to a spot which he thought looked ideal. At first he wanted to start work straightaway, but then he decided to wait until the morning. Then he went to sleep. The next morning he got up and saw to his surprise that the whole area had been cleared of bush overnight, and where the bush had been there were houses and an airport. He left a child in care of this place and went on and started another place like the first one. This went on until he had created seven places or centres like this. The last place he built like this was Sorom. After he had built Sorom, he died.

It was then that the Japanese came over [the sea] and they saw all these things that had been created by Apel. They saw the lights from a distance and said to themselves, 'ah, there must be a town over there'. They took out their compasses and then they came and found Yelebiel's bones that Apel had left behind. So the Japanese took these bones and carried them off to their country, and now everybody says that it is the Japanese that build all the cars and things like that. But really it is different. The Japanese don't really have the power or knowledge, they merely stole the bones of my ancestress and now

they have the power to make all these things. But in reality they don't have the power. But now we have gone to look for ourselves and now we have found out the truth."

It would probably have been possible to reproduce the myth of Gai and Apel in a shorter version and still capture the gist of the story. However, the narrative has a lot more to say than merely report how the creative power was lost to the Wam, and how other worlds came to possess it. The myth also contains a lot of information on the people's prevalent world view which is at times hidden away in the details of the narrative and the principal figures involved. Therefore, I shall first go through the story again, and try to decode some of the messages it contains, secondly I shall introduce two of the principal figures in more detail and set them in relation to the traditional order of the world and the roles they play there.

In the first order, the myth of Gai and Apel is an attempt to explain how the power to create was once a Wam cultural property; secondly, it explains how it happened that this power left the Wam area and how its people forfeited its use and, thirdly, it is an attempt to legitimize the claim of the Wam people to the creative power, now that it is lost to other worlds. Concerning the myth's formal structure one is able to discern three distinct phases:

1. Creative power is an integral part of Wam culture.
2. Apel takes it (in the form of Yelebiel's bones) to West Papua, i.e. Irian Jaya.
3. The Japanese come into possession of it and take it to Japan.

The transition from one phase to the next is marked each time by the event of a death.

1. Yelebiel dies. Apel takes her bones to West Papua.
2. Apel dies. The Japanese take the bones to Japan.

In the initial phase, at least in the first half, Wam culture is described in an ideal state, by which I mean that the drama's actors display a pattern of behaviour which approximates to a set of cultural ideals. The fact that Gai and Apel still use stone tools lends it an aura of an age of the "golden past". A mother (Yelebiel) lives together with her two sons. They reside, as we hear later, in Sembaua, a mythological place of residence on the mountain of Aresili. There is no mention of any wives, nor are there children, but more important, there is no mention of a father and husband, which we can take as an indication of the absence of agnatic tension. It is Yelebiel, the mother, who tells her sons each day what work has to be done. The two brothers do not contradict her, and each day they go out to work together, whilst their mother stays in Sembaua and "cooks" food and works on her bilum.

Probably the most characteristic expression of this golden era is the above-mentioned absence of agnatic tension. The nonpresence of a father is one element, but what features much more prominently in this context is the relationship between the two brothers, Gai and Apel. Between them there exists a relation of absolute equality. Although they are classified as elder and younger brother, there is no element of hierarchy or dominance to be felt. The two have a common interest – the task that Yelebiel has set them – and they cooperate well together. In one instance the elder brother Gai even obeys Apel when the latter tells him to hold an axe in each hand so that he can creep back to see what their mother is doing in the meanwhile. When Yelebiel prepares only one bowl of food, the

elder brother shares it with his younger sibling. The pattern Gai and Apel display actually reflects the often-stated ideal of sibling equality which is marked by cooperation, common interests and a common identity, but which, at the same time, sharply contradicts the experienced reality where the sibling relationship is often far from being harmonious.

The first extraordinary feature we confront is the task that Yelebiel gives her two sons: to build a canoe. It is extraordinary in the sense that canoes are not a Wam commodity, simply because there are no rivers, lakes or a seaboard on which to use them. I received no explanation for this, but I believe one way of interpreting this message is to read it as a challenge on the part of Yelebiel to transcend the rather narrow confines of cultural experience, in the same way as it is – in other myths – Yelebiel who introduced the Wam to female sexuality and to cooking food. If Gai and Apel had followed their mother's instructions, with no interruptions, the Wam would have become enterprising and creative or, to be more precise, the seeds of creativity already inherent in Wam culture would have blossomed and borne fruit.

A second implication of how the plot is about to develop is the way that the two brothers appreciate the food their mother cooks for them each evening. Whereas Gai clearly enjoys his bowl, thereby, given the value food possesses culturally, displaying cultural contentment, Apel finds it uneatable. He expresses not only contempt for his culture, but also a trait of inquisitiveness which clearly distinguishes him from his elder sibling. It is this inquisitiveness that induces Apel to spy on his mother and find out how she prepares the food she gives them each evening.

It is this deed that triggers off all the subsequent events. With Apel secretly watching, Yelebiel is unable to 'cook'. Although she goes through all her routine steps, her creative power is temporarily interrupted. She checks her pot twice before she realizes that she is being spied on. The incident is meaningful not only in terms of the events that are to follow, but also at the interpretative level when one seeks to unravel the message between the lines. Apel is not merely secretly watching his mother cooking food, he is seriously disrupting the existing pattern of gender relations. Here, a man is invading the mystical sphere of female creativity, from which he normally is barred. Moreover, it is not just any man intruding on the secrecy of just any woman, here it is a son trespassing on the creative process of his own mother. Thus, it not only is an act of incest, given the intimate bond between mother and son, it actually becomes the epitome of incest.

As it turns out, the food does not cook in Apel's presence, i.e. the creative process is interrupted, and only after Yelebiel discovers her son, and after he leaves the scene full of shame, does the process return to its normal routine. In the evening, Yelebiel prepares only one dish which the two brothers share. Apel's deed has no direct influence on the sibling relationship, which is still intact. However, the incident leads to Yelebiel's departure for Mehet, where she dies shortly afterwards. It is interesting to note that in Mehet, at the time, the men are just starting a tamberan cycle with the erection of a cult house. There is no direct reference to the cause of Yelebiel's death, but the coincidence of her death and the initiation of a tamberan, the epitome of maleness, and of Wam culture in general, is significant.

This is the actual turning point of the narrative. There are two sides to the matter. On the one hand, with the passing away of Yelebiel, the creative power leaves the Wam area for good, and the Wam lose their unique chance of being in possession of this extraordinary power, at least for the time being. At the same time, and this is the other side of the matter, the Wam begin to display their existing cultural pattern. It marks the end of the golden age of equality and cooperation which gives way to a period of hierarchy and conflict.

Now it is Gai, the elder brother, who gives the orders and tells Apel what there is to do. But it is no longer the task Yelebiel originally set them. Instead, Gai instantly falls into the prevailing cultural pattern that governs men's life and activities: the cultivation of yam and the tamberan. At first, Apel obeys his elder brother, as is expected of him, and helps him to plant yam and cut the posts for a new ceremonial house. After his return to Sembaua from Mehet, where he has taken care of Yelebiel's body, Apel tries to convince his brother that they should go back together and see to their mother's funeral. But this is no longer the age of equality and cooperation, and Gai adamantly refuses to hear anything about it. He makes it quite clear that he does not take orders from his younger brother, instead, he beats Apel and orders him to stay and work on. This act cuts the final link between Wam culture and the secret of creative power.

The next morning Apel leaves for Mehet, but not without first collecting some coconut leaves and a bamboo which he fills with water to wash the body of his dead mother. The two items, I believe, are of significance, in the sense that they symbolize the continuance of the Wam claim to the body of Yelebiel and, therefore, to the creative power inherent in her bones. Even after her death she remains in bodily contact with Wam essences in the form of the water that cleanses her body and the coconut leaves which contain her bones. The link to Wam culture is thus not completely severed after all. Especially the coconut leaves bear a clear message, when one considers that coconut palms generally function as important claim markers in relation to landed property and rights of settlement. Furthermore, one should not forget that coconuts are used as a metaphor to describe matrilateral filiation and ties.

With the death of Yelebiel and the departure of Apel to Mehet, the Wam lose control over the creative potential. Gai, representing the Wam, is pictured remaining in Sembaua, where he plants yam and becomes deeply involved in the tamberan, a pattern which has been sustained until the present. Apel, on the other hand, after carefully preparing Yelebiel's body, follows her initial instructions and starts to build a canoe again. When he lays her bones in the finished canoe, it shoots off, carrying them past Vanimo and into West Papua, or Irian Jaya. Thus, the creative power not only leaves the Wam, but Papua New Guinea altogether.

The fact that Apel extracts one bone, the skull, from the basket and leaves the others behind, may appear a trivial detail, but it is actually of high significance. The creative power is divided. Apel takes the skull and begins his wanderings, creating the seven centres on the way, whilst the Japanese later find the remaining bones and thus acquire the

capacity to produce all the commodities one sees in the supermarkets and in the streets of Wewak and other towns.

Apel, with the help of his mother's skull, goes on to create the seven centres or headquarters. After creating the last centre, Sorom, Apel dies and no further reference is made to him. His death leads to the second transfer of the creative power, or at least part of it, for now it is the Japanese that are attracted by the bright lights of the seven centres. They come to New Guinea and find the basket with the remaining bones of Yelebiel and take them back to Japan. The event not only explains how the Japanese became such an economic power but also why, in the first place, they were attracted to New Guinea during the Second World War.

Taking it that one of the properties of a myth is to explain the status quo of things, we have at the end of the narrative the following situation. The creative power, once an inherent potential in Wam culture, was lost to the Wam through their own ignorance or stupidity. In the end, the Japanese gained possession of half the power vested in the bones of Yelebiel, the other half remains on the island of New Guinea. Although it is not explicitly stated, but as we shall see shortly, half of the creative power is still active in Sorom, and Sorom, according to the NAC conviction, is nothing less than the home of the Wam ancestors.

The three figures in the narrative are Yelebiel and her two sons Gai and Apel. Otherwise, only an anonymous child appears, and there is mention of the men of Mehet starting a tamberan cycle. The proximity of the names Gai and Apel to the biblical figures Cain and Abel is striking and not coincidental, just as the narrative's plot has similarities to the biblical story where Cain strikes down his younger brother Abel, after which the elder is branded by God and thereafter carries the famous mark of Cain. The motif of the two brothers is, of course, near to universal. Certainly it is widespread in Papua New Guinea in both mythology and millenarian ideology (cf. Lawrence 1964; Burridge 1960).

Our myth-story hinges on the principal figure of Yelebiel and the creative powers she possesses. In Wam mythology, Yelebiel appears as a central figure in a variety of narratives which are all attached to the same core myth. This core myth tells of how Yelebiel once used to be a cassowary, and how she was tricked by a Wam man who stole her feather coat whilst she was bathing in a stream with some friends. They had all taken off their feather coats and taken on the form of women. When they discovered that they were being watched, they all ran away and slipped back into their feather coats, except Yelebiel whose feather coat was missing. The man took Yelebiel back to his village. He carefully hid her feather coat in the roof of his house. I have not got the space here to recount all her deeds whilst living amongst the Wam, so I shall only describe two aspects which are of some relevance to our myth.

Before Yelebiel came to live with the Wam, it is said, women neither had genitals, nor did they menstruate. Nor had the Wam yet learnt the art of cooking, and all they did was to lay out their food on stones and heat it in the sun. One day, Yelebiel, her husband and his mother were out planting bananas when the mother told her son to go down to the stream and look for a smooth, sharp stone. The man did as he was told and fetched the wanted

item. A few weeks later the three were out again in the garden and, whilst Yelebiel was bending down, the mother took out the stone and made an incision between Yelebiel's legs where women now have their genitals. The incision made by the husband's mother was the first vagina, and the blood that sprang from the cut was the first menstrual blood. Yelebiel was taken to the menstrual hut where she remained for the prescribed period. On the occasion of her menstrual feast, she observed the Wam laying out food in the sun to heat. She then showed them how to cook food properly and it is only since then that the Wam have been versed in the art of cooking.

Yelebiel is thus accredited with introducing the Wam to sexuality and the preparation of food, as paradigms of production and reproduction, in the culturally accepted way. Considering the pivotal significance these two domains have in human culture, it is no exaggeration to say that Yelebiel was the medium through which Wam society passed from a primordial state to the present state of humanness (but not its present cultural pattern). The various narratives continue to describe Yelebiel's deeds among the Wam until the day she discovered her feather coat hidden away in the roof of her house. Under false pretences she sends her children to the bush, and when she is unobserved, she slips back into her cassowary form and escapes. Yelebiel is said to have gone to the Gawanga and Urat areas where she allegedly continued her creative feats, for example she is said to have made one type of short yam from her own faeces which the Wam traditionally did not know until it was imported from the southwest.

In the modern myth of Gai and Apel, Yelebiel displays qualities similar to those she showed in the traditional myth. Again she masters something that Wam culture does not command, and again this feat involves the preparation of food. But this time she takes the process a step further. The yams she prepares for her two sons are not the fruits of gardening, where each step of production involves hard manual labour. Yelebiel's yams appear from nowhere, there seems to be no human effort involved. Furthermore, she even bypasses the step of cooking, she merely puts the yam in the pot, covers it up, and the yam is cooked, instantly. In many aspects the way the narrative sees how Yelebiel prepares her food resembles the way the Wam and many other New Guineans see Europeans preparing their dishes. They too, it seems, are able to bypass all the arduous steps of production. They have no gardens, they are hardly ever seen doing manual labour, but their larders always appear to be full. They cook without firewood, and sometimes it is not even apparent that they need heat for cooking. I do not mean this so much on a literal level but much more on a metaphorical level. I believe Yelebiel's ability to process "food" instantly is a metaphor of European or Japanese productive capacities where the consumer very often only experiences the end product without in any way being directly involved in the productive process.

As in the traditional myth, Yelebiel leaves the domain of Wam culture. But this time she does not merely go to a neighbouring group where she continues to create culturally-known commodities, such as certain varieties of yam. This time she dies, and the remains of her body are carried out of Papua New Guinea where they, however, continue to be productive, though now she no longer creates culturally indigenous commodities but

foreign products which are regarded as vastly superior. However, and this is also a consequence of her death, these superior goods are not attainable to the Wam, at least not for the time being.

In the traditional myth it is through Yelebiel that Wam society transcends a primordial state and adopts another state of humanness, one could say traditional culture. In the modern version, the Wam were on the brink of taking the next step, this time from what is now regarded as retarded traditional culture to a state of "unending modern affluence". The medium through which this transformation would have taken place was, again, the figure of Yelebiel. But through their own stupidity, the Wam missed their chance and now other worlds are profiting from it. However, a back door to one of these worlds was left open, but for many years and decades it remained hidden to the Wam. Now they believe they have found it, and the entrance through this back door is what constitutes the "secret" which only the New Apostolic Church is able to unravel.

In the myths centring around Yelebiel she is accredited with having children but these remain unnamed. The names Gai and Apel generally do not feature in the list of traditional mythical beings. In one myth that deals with the origins of the Wam people, there is mention of Kwai and Hapal who are described as brothers, but there is also talk of a third brother called Melmbe Kweindili. The myth, however, is of somewhat doubtful origin, since it contains biblical figures and motives: it tells how, after the great flood receded, Noah landed in Woimbulu near Mehet. It is from there that one of his descendants with the name of Bilio and his wife Yesper Elmoi came to Sembaua where they had three sons, Kwai, Hapal, and Melmbe Kweindili. The latter two soon fade out of the story, whereas Kwai or Gai is described as being one of the founding ancestors of several Wam lineages. In the genealogies of Warengeme lineages the name Gai appears only once; it refers to one of the more recent ancestors of the *saharampe* lineage.

The majority of informants, however, claim that Gai is identical with the main Wam culture hero, called Wohi (his second name is secret). The list of Wohi's deeds is long and colourful. Most of the narratives recount how Wohi rid the Wam area of various malicious and powerful spirit beings through trickery and prowess, and made it habitable for humans. Wohi's main feat, however, is that he introduced the Wam to two cultural complexes that have governed their way of life ever since, firstly the *kwal* tamberan and, secondly, sanguma or *arukwineme* sorcery. When he came to Uandihil Temelaua (a spirit place near the village) from Sembaua (after making a detour over Mehet), he brought with him two coconut-leaf baskets which contained the secret tamberan trumpets. He also brought with him *arukwineme* sorcery, which has been used ever since to guard the secrets of *kwal* from women and noninitiates. Given the importance the two complexes have in Wam culture, the figure of Gai/Wohi is most suitable to symbolize traditional Wam culture in the millenarian myth of Gai and Apel.

The younger brother Apel is a more shadowy figure and I have not come upon his name apart from this in the Wam pantheon of names. The name Hapeli or Happali is very common, but the pronunciation is distinctly different from Apel. The reference above where Apel or Happali is identified as the son of Bilio and Yesper Elmoi is the only one I

encountered, and I have already noted its rather dubious origin. On the other hand, the fact that Apel does not figure anywhere in the Wam pantheon actually fits the pattern in other respects since, after all, he left the Wam area for good and died in West Papua. His absence is thus explainable.

THE MILLENARIAN WORLD VIEW

Millenarian movements rest on a constructed theory concerning the nature of this world, its constituent parts, and the way they are linked together and work upon each other. Although they at first sight may appear confusing, or even irrational, they are very logical constructs. "Myth-dream" is the term Burridge (1960:26) uses to describe such ideological constructs relating to man and his position in the total environment. It finds expression in ideas about things, concepts, rumours, myths, stories, and anecdotes. For Lawrence it is a cargo belief, as part of a people's epistemological system (1964:5), that constitutes the ideological basis of a cargo movement. Jarvie (1964:65; cf. also Worsley 1957) uses "millenial doctrine" to describe such a set of ideas.

All these terms (and there are many more equivalent ones) in one way or another, and in a very broad sense, describe how a people view the world in which they live, but it not only relates to the narrow confines of experienced existence, it takes in other, more distant and alien, parts which people might only know of from hearsay and stories, such as Port Moresby, Australia, Europe, America, or Japan. It also includes the realm of the supernatural which is more real to the people than other regions of the world of which they have no direct personal experience. The world view does not only offer a panoramic or static view of things but is also a very dynamic perception of how the world, as it presents itself, came into existence, who it is populated by, how it functions, the relations between its various parts, and, in our case specifically, in what relation the Wam stand to this world. The world view not only comprises notions about places and peoples, deities, ancestors and spirits, and past events, both mythical and historical, and their main protagonists, but also ideas about material things and abstract concepts, such as Western goods and ideas like power, politics, democracy and freedom. This type of world view constitutes the basis of the people's perception of the status quo, and also the forum for the rationalisation of the strategies for preparing and effecting the transformation of the existing world order.

Before explaining what form this world view specifically takes for the New Apostolic Church Movement, I must say something about the construction of this system of ideas and about the two underlying principles the system contains. The first principle is that the world view operates on a binary or dual model of the world; the second refers to the highly selective mode of identifying and choosing concepts that help to construct the world view.

For the earlier millenarian thinker, if I may call him so, there existed very distinct worlds. There was the world of the villager, where the conditions of existence were known and accepted, insofar as events and processes were intelligible and, at least to a certain extent, controllable. On the other side, there existed the world-out-there, the encapsulating world, a world oF rumours and wonders which lay beyond the realm of experience of a great majority of New Guineans. It was the world of the white people, of foreign lands and

places such as Sydney, Germany or Bethlehem. There used to be a stark contrast between New Guineans and Europeans, or between "black" and "white", a partition of the world that was strictly upheld by colonial administrators, missionaries and other expatriates. This is not to say that the world and the conditions that determined it were easier to comprehend, but at least the pattern was structurally easier to grasp. However, this is no longer necessarily valid. Not only has the world-out-there become noticeably more complex, e.g. through the appearance of the Japanese as the main producers of material goods of all kinds, Papua New Guinea society itself has become considerably more heterogeneous, especially since Independence and the emergence of an indigenous economic and political elite. The growth of towns has come to symbolize this embryonic stratification of society for the simple villager. It is no longer only the Europeans, i.e. the whites, who are in possession of abundant wealth and have control of vast resources (both in economic and political terms); suddenly it appears that Papua New Guineans, or at least certain segments of Papua New Guinea society, have gained control over the source of affluence and power and have joined the encapsulators, so that the earlier structural opposition "black-white" is no longer applicable.

From the angle of the millenarian, the world today presents itself in a constellation where the "powerless" villager sees himself up against an alliance of "omnipotent" outsiders, to which not only Europeans and foreign nations belong, but also New Guinea politicians, businessmen, well-paid civil servants, and the urban elite in general. Moreover, this encapsulating group appears to be bound together by a covenant and a vow of secrecy where the source of material affluence and power is concerned.

At this stage I have to insert two important points. Firstly, in a mythical or primeval time this distinction between an omnipotent and a powerless world did not exist. The Wam were in possession of this creative power, as is recounted in the myth of Gai and Apel. It was only through the ignorance and stubbornness of the elder brother Gai that the world became separated as it is today. This has important implications, namely that the villagers believe they have a moral right to participate in the omnipotent world, since it is tapping creative power that originally used to be part of Wam culture (cf. also Worsley 1957:246).

Secondly, the two worlds are not completely separate, but in a process of continual interaction at various levels. However, and this is the crucial point, the omnipotent world is believed to present itself to the villager in a most ambiguous manner. Quite obviously it is in possession of the "secret", but the villagers are aware that, at the same time, it is extremely reticent and unwilling to part with the "secret" and share it with the world of the powerless villager. Moreover, not only is it uncommunicative, it is also perceived as being downright deceptive, in the sense that it imparts to the powerless villager only half-truths about its constitution and about the source of affluence, or at times mediates completely false knowledge.

The messages and signs imparted by the encapsulating system concerning the nature and mode of functioning of their world are placed by the millennialist on a scale that ranges from the pole of "truth" to the antipode of "lie". The epistemological process becomes one of evaluating such messages and images in terms of their correctness. Very

often they are interpreted as being downright lies, sometimes they contain a grain of truth, only very seldom do the people believe they are being served the real truth. However, the truth of a message is sometimes also relayed to them when they are being told a lie, since the negative of the message they identify as a deception does, in fact, reveal the truth. Thus, to take an example, it is unbelievable, and therefore a lie, that the affluence of Western society is based on such factors as a highly-advanced technology, a complex economic organization and an elaborated political system, all of which are the product of gradual development over centuries. Such explanations are regarded by the people as being well-disguised deceptions, but since they recognize the wilful deception behind such propositions, they conclude that the opposite must be true; in this case that the source of affluence is connected to a secret realm of power, and that God, in some way or another, is responsible for its dispensation.

Many of the messages and images fall into the category of half-truths, i.e. the concepts recounted to the New Guinea villagers are basically correct but not in the version in which they are being told them. For instance, it is not doubted that political independence is a prerequisite of development and autarchy, but the independence that was granted to Papua New Guinea in 1975 was not true independence; or, money is the basis of material prosperity, but the PNG currency, the Kina, is not real money, only a false surrogate; or, Christianity is the key to a good life, but the Papua New Guineans have only been given an abridged version of Christianity and the missionaries are withholding some key passages. There are many more such examples and I shall return to some later on.

Such a standpoint allows a large degree of flexibility and freedom of interpretation. Facts and findings about the world are often tossed and turned up and down this scale, maybe over a period of many years, until they fit the existing framework of the current millenarian theory. However, since the framework itself is the product of sets of interpretations of facts and interpretations of interpretations, it is itself subject to the same versatility and flexibility. If it is confronted with an irrefutable fact, such as the failing of a meaningful undertaking, it itself will undergo a transformation until the empirical findings and the basic premises again become compatible.

One of the best examples of this kind is offered by Lawrence (1964), who shows how the people of the Rai Coast of Madang at one stage identified their own deities as the supernatural producers of "cargo". In the next period, some years later, the indigenous deities were declared "satans", and it was the European God that was the true source of "cargo". In a later movement, the table was turned again and the native deities became the principal figures once more. Throughout all these transformations, however, the basic postulate that material wealth was being produced by supernatural agencies but that it was, for some reason or other, being kept away from the Papua New Guineans, remained unchanged. It is due to this versatility and the capacity to adjust to changing situations and adapt to altered realities that millenarian movements have survived and not petered out with the spread of education and the diffusion of development. As the total environment has become more complex, so the millenarian movements have become more sophisticated.

A second principle I should like to introduce refers to the highly selective mode of choosing images and concepts that help to construct and sustain the world view. There can be no doubt that the origins of the current millenial theory go back in time. Some of its components are lodged in the body of traditional mythology and the belief system, others have been inserted and rearranged over the last decades under the influence of experiences with the colonial world and, also, under the impact of earlier movements such as the Peli movement, or even those of the Rai Coast of Madang. The present theory, however, is not a bounded set of ideas, propositions and postulates; on the contrary, it is an assemblage of interlinked notions and rationalizations, centring on a core belief that is constantly being extended, revised and reinterpreted. Such new concepts as are built into the theory are taken and picked up from a variety of sources, such as books, pamphlets, news items, or personal experiences. They are the product of rationalization, logical deduction and discourse and do not appear to be the results of individual dreams or visions. Terms or images are taken out of their given context on the basis of their associative or inferred qualities. The background from which these ideas or images are taken are of importance, because they lend the selected items their authority.

The selective process comprises four steps although the steps do not always neatly follow the order I name them in; just as often the process is a dialectical one. Firstly, a message (a name, term, or an image) is picked out and identified as being meaningful; Then, secondly, it is extracted from its original context; thirdly, it is manipulated, i.e. it is given an absolutely new meaning, or its signification is extended, turned upside down or otherwise revised; then, in the final step, it is inserted into its new context as a postulate of the millenarian theory. Such messages are regarded as items of circumstantial evidence which underline and support the current theory. Some of them never receive more than secondary attention, others retain their status as pieces of evidence, and some of them actually become new pillars, supporting the existing theory. One such term that acquired pivotal significance in the New Apostolic doctrine was the phrase "highlight".

The term was taken from a commemorative album in honour of the New Apostolic Church Chief Apostle's visit to Canada and the United States in 1983. I shall be returning to this album later on in more detail because it plays a central role in the formation of the NAC's world view. The phrase "highlight" was used in the title of a short introductory note which read "Highlights of our Chief Apostle's Visit", it was thus being used in its familiar sense. For the members of the NAC in Warengeme it meant much more than a special event or events that stand out in a sequence of such. "Highlight" was interpreted in a much more literal sense to mean the "light above", which then again was read as a metaphor to mean the "divine light". Since the term was being used in connection with the Chief Apostle of the NAC, and since it was included in a book that was believed to contain pictures of "paradise" or "heaven", the term came to stand for the divine status of the Chief Apostle and the godly nature of his deeds. Translated into the NAC's millenial theory, "highlight" meant the Second Coming of Jesus Christ, and the people stated that when the Chief Apostle visited Papua New Guinea, an event scheduled for the near future, the country would come to look like that shown in the pictures of the album.

The list of terms, names and concepts and, very importantly, of pictures and images, that undergo this kind of transformation of meaning is long: Syria, politics, freedom, culture, Melanesia, development, are all concepts that have recently acquired a new meaning and are woven into the current ideology.

It becomes apparent that the New Apostolics operate on a complex ideological basis and with highly flexible and extremely adaptable conceptual equipment. The core message of the ideological construction, namely that the Wam used to be in possession of the creative power and that they, therefore, have a justified claim to participate in the omnipotent world, remains constant. It is the notions and assumptions that are built around the core that are constantly being transformed, adapted, and reinterpreted in such a manner that they continually support the conviction of the movement's followers that salvation is at hand. The pattern is the same as Lawrence found for the Rai Coast some thirty years earlier: "These assumptions could be built into a system of ideas which made the new situation completely intelligible and offered hope of bringing it under control. The system was so versatile that, whenever a particular explanation was proved wrong, it could be replaced immediately with a substitute" (Lawrence 1964:7).

In the myth of Gai and Apel, the younger brother carries his mother's bones past Vanimo and out of Papua New Guinea into what is today generally known as Irian Jaya. The term Irian Jaya is known in the village, but it is not the name commonly used to designate the Indonesian part of the island. Through the media, education and hearsay, the people are aware of the political situation across the border. It belongs to Indonesia although its indigenous population is not Indonesian but rather Papuan or Melanesian. They are also aware, in very general terms, that the indigenous population is being oppressed by the Indonesians, and that parts of the population have formed a group that is fighting against the Indonesian dominance. The anti-Indonesian OPM (Organisasi Papua Merdeka) movement is generally known under the terms of "Freedom Movement" or "Freedom Fighters" (Osborne 1986:54).

The fact that Apel took Yelebiel's bones to the other part of the island and created the seven centres or headquarters, and the fact that there are *Melanesian* people there who have formed a *Freedom Movement* is not looked upon as coincidental. The set up reflects the constituent parts of a plan that heralds things to come and has already existed for many years. But it is only recently that the Wam, more specifically the NAC followers, have been able to decipher the message and decode its contents. One of the main keys to the message lies in the way the NAC followers perceive West Papua, who the inhabitants of the seven headquarters are, and how they are related to the Wam.

As stated above, the term Irian Jaya is known in the village but it is not commonly used. Old men still often use the name "Hollandia", but the most common term is "West Papua", used by both NAC followers and other villagers. It is, as such, a neutral term describing the area west of the border to Papua New Guinea. By inference, however, the name has a very much deeper significance, at least for the NAC, since it is the area in which the seven centres are situated which were created by Apel through the power of Yelebiel's skull, and of which the last centre, Sorom, is the most important and, actually,

the only one that carries a name. But West Papua is also called "paradise" by the NAC followers more narrowly the term is applied to the seven centres, and specifically to Sorom. It is the paradise of the Bible, not in the sense of the Garden of Eden, but the location of heaven. But at the same time it is not identical with the paradise postulated by the Catholic Church. Sorom is paradise, and at the same time, Sorom is the home of the Wam ancestors.[2]

The source that carries the clearest message about "paradise" is, naturally, the Bible, and it is, of course, the biblical concept of "paradise" or "heaven" that has served as a blueprint for the New Apostolics' vision. There is no doubt concerning the Bible's authenticity, the Bible is the one and only truth, but until now the contents of the Book of Truth have been related to the people through the medium of the church, and it is here that the New Apostolics believe that they have been deceived. The concept of "paradise" as used by the Catholic Church and the missionaries is regarded as being false or, at least, as only containing half the truth, and, moreover, the lesser half.

"True, before we were led astray, but now no longer. For a long time they have hidden it from us. When they talked about paradise they told us lies, they said that we were people that stole from others and killed with sorcery, they said we would go to hell and that we would burn in the fire. But this isn't true, they really lied to us about this."[3]

It is only lately that the New Apostolics have discovered that their deceased do not go to hell but in actual fact to paradise, which is located in Sorom. It is to Sorom that their dead go, and it is the Wam ancestors that inhabit the last centre Apel built with the help of Yelebiel's creative power. Paradise, they feel, has existed in other countries such as Australia or the nations of Europe for many centuries, it is only the Papua New Guineans that have been made to believe that paradise is a state of "after-life". But paradise does not exist only in a spiritual dimension, as a mythical place called heaven, where the souls of the dead that are free from sin convene and reside, in particular the souls of the deceased Europeans. On the contrary, it is located in this world, and there is a paradise on the island of New Guinea. It is in the paradise of Sorom that the Wam ancestors continue to be creative and manufacture an unending supply of commodities and material wealth which, however, the ruling elite in Papua New Guinea (supported by the rich nations) successfully divert from the destinations intended and put to their own use instead.

Up till now, the NAC followers believe, the truth has been successfully concealed from them. They have been made to believe that wealth and affluence are the result of hard work, cash cropping and business ventures, and that development will, in the end, lead to a way of life which is comparable to that of other worlds or nations. They were told that Papua New Guinea is a developing nation and that it would take time and a lot of effort on the part of its people. Other nations were more advanced, they had mastered technology and invented machines long ago, but they were now bringing their knowledge to PNG and were prepared to share it with the New Guineans. Such explanations are put down as lies and gris tasol (mere eyewash). Moreover, they see themselves as the victims of a conspiracy which was devised long ago and is being held upright today by a covenant between some powerful New Guinean politicians, mainly represented by Michael Somare

and his Pangu Party, the Indonesians, the Catholic Church headed by the pope, and the Queen of England in her function as the sovereign of Australia. The Queen of England and the Catholic Church symbolize the colonial past, whereas Michael Somare and the Pangu Party represent the colonial legacy which still holds sway over Papua New Guinea's fate, even though the country is nominally independent. But the independence that was granted to PNG in 1975 is, as we shall see later, an illusion created by Somare and his party henchmen with the help of the old colonial powers.

At first sight, the odd-men-out in this unholy alliance are the Indonesians. It is common knowledge that the relations between Papua New Guineans and their neighbours to the west are at times strained, and that the Indonesians are regarded as a threat. But to the New Apostolics this again is a well-disguised deception. The Indonesians and New Guinea politicians are merely feigning conflict and opposition, the same tactic that Wam sorcerers are believed to revert to when trying to cover up for each other during sorcery disputes and in front of the court. In actual fact, they have an interest in common and that is to conceal the truth from the people of New Guinea concerning the source and the secret of power and affluence situated in Sorom. This is also the true reason why the Indonesian government is fighting against the OPM rebels, better known to the New Apostolics as the Freedom Movement.

Inspired by descriptions given by people who allegedly have been to West Papua – some people of the Maprik-Dreikikir area have actually been to visit the refugee camps on the Irian Jayan border – one of my main informants was planning to go in the near future. The NAC followers have a clear picture of Sorom, or at least of what are to them some of the vital aspects of paradise. Other features remain opaque and diffuse, and they answer with a shrug of the shoulders "how are we to know what God is preparing for us."

Some of the more important components are the following. Paradise, namely Sorom, is inhabited by the Wam ancestors.[4] Sorom is depicted not simply as the refuge of the dead, where they continue to exist in the form in which they died, but as a living society. In some ways it is a mirror of life in this world but, naturally, it differs in some very significant features. And it is, of course, these essential aspects which make Sorom different from Wam society and which are selected and emphasized. One main factor which makes Sorom more than just an assemblage of dead ancestors is the presence of children, in what appears to be great numbers. Their presence is not explicitly explained, nor is this probably necessary. One does not hear whether they are children that died in this world and went to Sorom, or whether they are the offspring of ancestors who were born in Sorom. Neither are the relationship patterns explained. The important point is that the mere presence of children gives paradise a recognizable form and an element of humanness which the people can relate to, and which makes Sorom an identifiable extension of living Wam society.

One main aspect which makes Sorom very different from Wam is the settlement pattern and the spatial arrangement in general. The ancestors do not live in dispersed hamlets in bush huts made of natural materials, but in elegant two- and three-storey houses. Each (extended) family inhabits such a multi-storeyed house.

"...They also have two-floored houses, very large houses for each family. These houses are very high, there's one floor on top of each other, room for room. Imagine now my father Silehi would build one [a house], there would be a room for him and his wives, I would have a room for myself, Lambihi would have one, so would Nambisil, that's how it is ... ." The settlement pattern in Sorom is compact and dense. There are no open spaces between the single houses: "... they couldn't say to me, you go over there, that's your land, you build a house there, no, they couldn't say that, because there is no land available, it's all occupied. They live like ants, there are so many of them. ... . If I were to pull down my house here and build a new one, I would have to build it on top of another one. That's really something, there's just no free land where I could build a house of my own."[5]

To a Western urban inhabitant there is nothing very paradisiacal about such prospects. Neither is the pattern depicted for Sorom anything like that of the Wam, where the people live in dispersed hamlets and with ample space between each family unit. The people prefer a certain degree of seclusion and privacy, a family seldom lives completely isolated but with two or three other units with whom they occupy a hamlet. The idea of living in such crowded circumstances is beyond imagination, simply because such a density would lead to strife and conflict. The dispersed settlement pattern is a basic preventive measure to avoid such conflicts. The apparent contradiction between the vision of paradise and existing cultural preferences finds its resolution when one takes into account that, at the same time, there exists a cultural ideal that equates large numbers with strength. Strong villages are depicted as being those with many inhabitants and not necessarily those with the bravest fighters. Large villages are able to organize large tamberan feasts, with many pigs and displayed yam, and prestigious decorations for their initiates. In the reality of lived existence there is the difficulty of balancing the size of the village so that external threat and internal strife are kept in check. In paradise this is not necessary. There, internal strife, jealousy, treachery, and fighting do not exist. The ancestors live together in peace and harmony and their efforts are directed towards other more profitable and more communal ends, even if they literally do live on top of each other.

Thus, the reference to the density of the settlement pattern nominally refers to the state in paradise, but it inferentially says more about the situation among the Wam at present, and the way the people perceive their own existence. What it is saying is that, if the Wam were not as wicked and bad as they are, wracked with jealousy and deceit amongst themselves, they would have attained the state of paradise long ago. They probably would never even have lost the capacity of creative power in the first place. The absence of material wealth and affluence among the Wam is not due to the absence of capabilities or knowledge. The Wam have not attained paradise because they are morally at fault. Such ideals as brotherly love, respect and forgiveness, as postulated in the Bible, are absent from Wam social practice. Instead it is egotism, distrust, jealousy and the constant quest to be better than one's neighbour that are the hallmarks of Wam society. These are, metaphorically speaking, Cain's (Gai's) mark of Wam society.

The main feature of paradise, however, and also the principal reason why its inhabitants are being oppressed by the Indonesians (who are operating as the henchmen of

the omnipotent) is that the ancestors are producing an endless supply of material wealth and commodities which, basically, would be destined for the Wam, but which are being diverted. Although not explicitly mentioned, it becomes evident that it is the creative power of Yelebiel that is still operating here.

"They used to say that we are all sorcerers, sanguma and thieves, and that we would burn in hell when we died, but this isn't true. I tell you, they [the ancestors] work day and night, they stand at their machines making money, machines like the big cement mixers you now see in the Urat area. Others, they have long beards, they are all dirty and their hair reaches down to their arses, but they work. They hold their food in one hand and a shovel in the other, that's how they work, day and night, day and night. They make cars, ships, planes, everything, whatever you like, that's how they work in Sorom. ... . But when the things are put in the ships, that's when we're tricked, when the ship sails and comes to an island, that's when they rub out all the names. For instance now, let's say my father Silehi he's made a car for me and he wants to send it to my address, okay, then my name and the name of my hamlet, Tubilme, are written on the car. But when the ship comes to this island, they take off my name and put on their own, that's how they cheat us, they take off our names and put on their own, and then they say the car was made in America, or Japan, or Australia. It isn't true, but that is how they trick us, these things they are made nearby, just across the border, where the sun goes down. But they say to us, we can't cross the border of Papua New Guinea, that paradise is a forbidden area, because they are cheating us, they are tricking us, that's why."[6]

The belief that the ancestors are the producers of material wealth and goods and that others merely alter the address and the name of the receiver is not new. It was encountered in earlier movements (cf. Lawrence 1964) and it would be interesting to follow up the links to see in how far, and whether at all, the present notions have historical roots in earlier movements of the Madang coast, or whether these are autochthonous views. But this would be leading too far. Let us recapitulate some of the essential points.

The myth of Gai and Apel explains how the creative power which once used to be a property of Wam culture was lost to the Wam through the stupidity and ignorance of the elder brother Gai. Apel took Yelebiel's bones to West Papua where he founded Sorom, which became the home of the Wam ancestors and where Yelebiel's creative power is still active. Up to the present, the Wam have been ignorant of the fact that their ancestors have been producing material goods in abundance and that they have been sending their products to their descendants in Papua New Guinea but that these goods are being rerouted by adverse powers, such as the Australians, Europeans, and the power-wielding elite in Papua New Guinea who declare them as their own. The fact that this *truth* about the origins of material goods has remained unrevealed to the Wam is not merely a coincidence. The truth has been concealed deliberately from them by the wielders of power who have, instead, supplied the villagers with surrogate concepts and fake institutions, with the intention of making them believe that they have attained an equal status to other nations and peoples. One such deception is the idea that PNG gained independence in

1975, another is the notion that the PNG currency is real money. Intrinsically it has no more value than "monopoly" money.

Here we encounter the ambiguous world view again. The New Apostolics do not query the validity of the concept of independence as such. There can be no doubt that other nations, such as Australia or the countries of Europe, are independent. They simply do not believe that what they themselves were granted in 1975 was independence. Again there exists a myth-story that illustrates what actually happened on the eve of that day and which explains and rationalizes the present status quo.

"On the eve of Independence, the bishop [of the diocese of Wewak at that time, Leo Arkfeld,] told Michael Somare to come to his house at eight o'clock to fetch independence. Somare agreed and said he would be there at eight o'clock sharp. Then he went back to the Windjammer Motel to celebrate with his fellow politicians. Eight o'clock passed and Bishop Leo waited for Somare, but no one turned up, and when it got to ten o'clock the bishop shut and locked the door, and went to bed. Some time around midnight, Somare, already drunk and reeling, looked at his watch and decided it was time to visit the bishop to collect independence. He arrived at the bishop's residence in Wirui but found the door to his house locked, and the lights out. So he knocked on the door. The bishop, who was already deeply asleep, woke up when he heard the knocking and called, 'who's there?' 'It's me, Michael Somare, I've come to fetch independence', was the reply. The bishop rose from his bed, took down his shotgun from the wall, and went to the door. He opened the door and pointed the gun at Somare's chest. 'Piss off, and get out of my sight,' he shouted at Somare, 'I told you to come at eight o'clock and not at midnight to fetch independence. It's too late now, so get out of my sight.' Somare left the bishop's house and made his way back to the Windjammer. On his way he thought to himself, what am I going to tell the people tomorrow who are expecting independence? Oh, he thought to himself, I'll just tell them that we are independent, they're sure to believe it. An that is how it happened."[7]

The myth-story contains some very meaningful information, on a metaphorical level, concerning the people's appreciation of the concept of independence. Firstly, there is the notion that independence is of godly origin, and not the product of a political process. It is God who bestows independence on human society, where the politicians should act as caretakers in the name of the people. Independence also has a very concrete and tangible quality. In a way, one should be able to see and feel independence. But the myth-story also reflects the people's notions about differing patterns of behaviour between Europeans and New Guineans. Whereas the former value punctuality and reliability, these qualities appear to have no significance to New Guineans. They do what they like, and do it when they feel like doing it. It is in this sense that the New Guinea politicians are seen as the epitome of selfishness, unreliability and hedonism. They should be the servants of the people but, in reality, all they are interested in is the accumulation of personal benefits, power and pleasure.

For many New Guinea villagers, independence has in fact remained nothing but an empty word. Their basic situation did not change for the better when Australian rule

ended; on the contrary many of them see only deterioration in the country. To them it really does appear that Michael Somare merely declared independence, without really being in possession of it. In truth, many NAC followers say, it is still other powers that rule Papua New Guinea, but since 1975 a number of New Guineans have been let into the secret and are allowed to participate in the wealth and power that used to be reserved for the colonial masters. These are the rich in the towns, business men, civil servants and politicians (with a few notable exceptions). Having become initiates of the covenant they are, naturally, only interested in sustaining the myth of independence and making their fellow countrymen believe that they are really in control of their own affairs.

The method by which this is accomplished is by providing the New Guinea villager with surrogate or fake concepts and ideas, and suggesting to them that they are in possession of the real instruments of power. The term independence itself is, as we have seen, such an empty concept and there are a number of others that falsely imply the notion of control over one's own affairs. Probably one of the most illusionary concepts concerns the validity of the Papua New Guinea currency.

The idea that the PNG currency is not highly valued is not only a feature of the followers of the NAC but generally a quite common belief. However, it is the New Apostolics that have raised the issue to one of pivotal importance. According to them the PNG money is absolutely worthless, i.e. it has no intrinsic value, because there are no portraits of humans displayed on the bank notes. Kina notes are decorated with an assemblage of traditional artifacts and representatives of the indigenous fauna, such as pigs, cassowaries and crocodiles. All the other nations, they maintain, display on their notes heads of human beings, of men and women, which they regard as an indication of superior origin. Not only have such currencies been authorized by God, it is stated; it is taken as a sign that the inhabitants of other nations are the "children of God". This would be the case in PNG as well, if the New Guineans were allowed to produce their own money. But the country has no "money factory", or mint, of its own – another sign that PNG is not independent – the Kina currency is still produced in Australia. This is done with the intention, the argument runs, to make New Guineans believe that they are the descendants of pigs, cassowaries and crocodiles, and not the children of God.

In the sustainment of this conspiracy which creates a make-believe world for the New Guinea villager, the Catholic Mission is allocated a central role. Unlike the powerful politicians who do not venture from their urban centres, the Catholic Mission is ever present in the rural areas, and from this covenant it is often the missionaries who are closest to the village people. Moreover, since they are directly involved in the religious sphere and issues concerning the nature of God and the world, and claim to be here in order to help the people in spiritual matters and support them in their quest for salvation, more is expected of them and they are made more directly responsible for spreading a false ideology than, for instance, Australians and Indonesians, who are far away and out of reach of the villagers. But, even if the missionaries do hold the answer to the secret, they show no signs of being prepared to share their secret with the people they are nominally responsible for. On the contrary, they are the principal mediators of the false ideology

which they spread in order to uphold the present unequal relations of power and wealth. It is not that the New Apostolics distrust the Bible – the Book contains the whole and ultimate truth – it is the missionaries they distrust, because they have been dispensing wrong interpretations and leading people onto wrong paths, especially where the concept of paradise/heaven, and the relationship between God, Jesus Christ, human beings and the nature of material wealth and power are concerned.

For many years the conspirators have been successful in keeping the secret to themselves, and over this period of time there have been a multitude of indigenous attempts to unravel the secret. Many attempts failed, but this did not mean that the quest was ever given up. Disappointments and failures merely led to the abandonment of some of the doctrines and beliefs which were then replaced by new ones or supplemented with previous ideas that were slightly revised and reinterpreted in order to be accommodated to the altered situation. Speaking for the Yangoru area, Gesch (1985) noted that the Peli movement, although the most dramatic and best organized, was not a new movement that arose out of nothing but, in actual fact, only one specific phase of a much larger and durable movement that went back to the early decades of the century, and which he subsumes under the name of Mount Rurun Movement (cf. also Camp 1983:91). When the Peli movement failed to achieve its objectives, it did not mean the end of the people's preoccupation with the quest for the millennium. After the disappointment of the early seventies, the movement needed not only a new motivation but also a new message and a revised organizational form. All these factors were provided on the appearance of the New Apostolic Church. As Gesch notes: "The Movement was ripe for the assumption of some form of Christian church" (Gesch 1985:107).

THE NAC APPEAL

How is it possible, one could ask, for the New Apostolic Church to be able to gain foothold and spread so quickly in the East Sepik Province? There are many reasons for this, some of them have to do with the situation at the time, and the pattern of issues with which the people of the Province were preoccupied at the end of the seventies, some of them have to be sought within the New Apostolic Church itself and its method of proselytizing. Compared with other denominations active in the province, there can be no doubt that the NAC had a very aggressive form of spreading the gospel, and the number of converts was the most important measure of their campaign success. In a report of a tour of PNG in February 1980, district evangelist Woll wrote: "...we held the last Brother Meeting in Wewak, where I brought to their attention that we had baptized since the last Apostle visit 5,559 souls ... . I said that by the time our Apostle Wagner would come in June I would like to have a total of 10,000 souls to be sealed. This meant that we would have to gather an additional 4,441 souls."[8]

This type of evangelization could not, however, be successful if the NAC had not met with the clear readiness on the part of the villagers to accept a new form of Church and a new message. In this section I shall try to uncover some of the reasons for this success and

show how compatibility between the official NAC doctrine and the villagers' expectations is established.

There can be no doubt that the NAC represented a novelty in many ways, in spite of the fact that Christianity and the Christian churches were institutions that the people were well accustomed to and which were well integrated into village life. One of the novelties concerns the origin of the NAC. The apostles and evangelists that came to PNG were from Canada mainly, a name which was new to the majority of people and therefore contained an aura of mysticism other denominations did not, or no longer, have. Priests and ministers of other churches had come from Europe, Australia or the United States, and, more recently, from a number of Asian countries. But as history had shown, they had not brought salvation. Canada was a new name, and new things often promise new hopes. More important, however, is the fact that there is no other church that carries such an indisputable message concerning the *imminent* return of Christ to this earth, and the implications this return will have. The Second Coming and the Last Judgement are, of course, elements of Christian belief in general and part of the doctrines of other churches as well, but for the NAC this notion constitutes the core of their doctrine around which other issues are centred. The fact that the official NAC itself is eschatologically oriented is of significance because it meant that the villagers believed that they were at long last receiving the confirmation of their expectations and hopes. This time it was not a New Guinean that had dreamt up some idea about the return of Christ and the reunion with the ancestors, it was now white people themselves who were preaching this idea and they were, it seemed, completely convinced of the literal truth of their message. It appeared to many villagers that for the first time an agency of the encapsulating world was willing to initiate them into the secret and share it with them.

In this conviction they were supported by some significant clues. First of all, the strategy of the NAC is not to build up mission stations and man them with expatriate missionaries, instead it is their policy to establish indigenous organizational structures which are able to cater for themselves and are not reliant on foreign manpower and resources. This is not only the much more economical way; at the same time it meets with the expectations and claims of the New Guinea villagers in terms of self-determination and autonomy. Unlike other schemes and ventures where foreign involvement is concerned (ecclesiastical as well as secular) and which usually have attached to them some preconditions of educational, technical, or other form of qualification, the NAC handed over "their church" to the New Guineans, ordained priests, evangelists, and deacons, not on the basis of educational qualifications, moral integrity or durable faithfulness, but on spiritual willingness. Further, the village churches enjoy a large degree of autonomy and are granted the power of making independent decisions, such as appointing personnel. In short, it appeared to many villagers that the new church was prepared to meet them on an equal basis, and converse with them as equal partners, and not treat them like irresponsible and ignorant subjects who needed the benevolent and paternal guidance of white missionaries.

Another factor which makes the NAC appealing to the villagers is that it displays a very clear-cut and convincing organizational structure and hierarchy which approximates to their notion of how white institutions are organized and function, and which other churches ostensibly do not have. According to their own doctrine, the New Apostolic Church is the only real and legitimate church because its work is carried out by living apostles and evangelists and thus comes close to the form of the Early Christian Church. The church is headed by the Chief Apostle. Subordinate to him are the district apostles, who are followed by the apostles and so forth, until the lower echelons of the hierarchy are reached with priests, deacons, and subdeacons. The sporadic visits by apostles and district apostles to the villages and the long-heralded visit of the Chief Apostle to Papua New Guinea are more significant and effective tokens of mystical power than the permanent residence of a bishop in Wewak who is seldom seen in the village.

There is also something very pragmatic about the NAC that is appealing to the villagers. Members of the "new contract", as the NAC is often called in the village, compared to the "old contract", meaning the Catholic Church, are handed out membership cards on the occasion of their baptism and on these their names are written. These membership cards are called "tickets" locally. When the apostle Simon Kumasi visited Warengeme in February 1985, he explained the importance of these "tickets" by using an allegory. In modern travel, he explained, you had to think of many things before leaving on a journey. You needed a passport, your money, an itinerary and a ticket, otherwise you wouldn't get anywhere. Without a ticket all you could do was think about travelling and all the places you would have seen if you had been in possession of a ticket. This, he continued, was exactly what all the other churches were doing: they were only thinking and talking about God, Jesus Christ and the apostles, whereas the NAC had living apostles, and they distributed "tickets" to their followers, which meant the NAC was not only thinking and believing, it was actually moving and getting somewhere. But for the followers of the NAC the membership cards also have a deeper significance than the idea of travel. It means that their names have been entered in the "Book of Life", which contains the names of the 144,000 chosen ones, and which is in the hands of the Chief Apostle.

A further, highly significant, feature of the New Apostolic Church concerns the act of "sealing" which forms a part of the Holy Sacrament. "Sealing" can only be performed by an apostle. By the laying on of hands on the initiate's head and the speaking of a prayer, it is believed that the Holy Ghost flows into the new convert and becomes manifest. Again, only the believers that have received this blessing can hope for salvation and entry into heaven. Since this act is verified in the Bible (Apostles 8.17; Matthew 3.16; John 6.27; 20.2), belonged to the ritual of the Early Christian Church, can be performed only by an apostle, and since the NAC is the only church with living apostles, the act is regarded as further proof that the New Apostolic Church is the only legitimate church in existence.

The diffusion of knowledge and the dissemination of information concerning the NAC and its doctrine runs through a variety of channels. They include intra-village discourse between NAC followers, and also the personal contacts the leaders entertain with other

NAC churches of the area. During my fieldwork the village was visited by indigenous evangelists and priests on several occasions, and once by the apostle Simon Kumasi who was accompanied by a Canadian evangelist (February 1985). They held a church service during which a number of converts were baptized and received "sealing". On a number of other occasions, NAC followers went to Wewak or Maprik to see and hear visiting apostles who were on tour in the country. Such public meetings, especially when they involved the visits of high-ranking NAC officials from overseas, were important sources of new information. New messages were received and interpreted and, on occasion, woven into the fabric of the millenarian doctrine as described above.

In addition to these channels, there existed in Warengeme two books on the New Apostolic Church which served as important sources of knowledge and media of information, and which also qualified as quasi reference books where the formulation of the millennial doctrine and the authenticity of the prevailing world view were concerned.

The first was more of a booklet than an actual book. It contained an introduction to the New Apostolic Church with a short survey of the church's history and its organizational structure, as well as its core beliefs and liturgy. It was written in fluent Tok Pisin and was thus accessible to many people. The booklet contained a mixture of quotations from the Bible (with references), interpretations of these passages, and also NAC-specific additions and insertions. The way the text was structured, however, was deceptive in the sense that the genuine Bible passages were not distinguished and held apart from the interpretations and the author's own words (district apostle Kraus). In combination with the versatility and ambiguity of some of the Tok Pisin terms (e.g. pe which means payment or wages, but which can also be understood as spiritual reward), the result was a highly delusive and ambiguous codex but, at the same time, one which fulfilled its function of capturing the readers' imagination and which helped to confirm their millennial expectations. For illustrative purposes, I shall quote some of these passages below.

"When Jesus built his church on this earth, he himself made Peter his principal apostle in order to watch over God's flock of sheep. Peter received the name Chief Apostle, or headman of the apostles. Jesus called him rock (stone) and he gave Peter this key that fits the door of the kingdom of heaven (p.5)."

("Taim Jisas i wokim sios bilong em long graon, em yet i makim Pita nambawan apostle bilong lukautim na was long ol lain pikinini sipsip bilong God. Pita i kisim nem Chief Apostle o hetman bilong apostle. Jisas i kolim em olsem ston na i givim tu long Pita dispela ki i go long dua bilong kingdom bilong heven.")

This passage suggests that the term Chief Apostle was coined by Jesus himself and that it is verified in the Bible. Notably, only the NAC has a Chief Apostle, and he, allegedly, holds the key to heaven.

"The three (holy) sacraments Jesus gave out in the sense of a ticket, a human of this earth must first receive before he can go to heaven [John 3:5] (p.10)."

("Dispela 3-pela sakramen, krais Jisas yet i givim olsem tiket, man bilong graon i mas kisim pastaim, em i go long kingdom bilong heven [Jon 3:5].")

This is a misquotation in a double sense. The English Bible does not, of course, refer to a ticket anywhere, nor does the Tok Pisin Bible issued by the Bible Society of Papua New Guinea do so, it is a metaphor created by the NAC, but its use in the above passage implies something different. The NAC membership cards, remember, are called tickets. Secondly, the quoted passage above is wrong. John 3:5 contains Jesus' answer to Nicodemus, quoted in the passage after next.

"In the English Bible you can find it in Esdras II (Apocrypha) where it says: 'the work of the New Apostolic Church.' God only made one church, and he hasn't changed this since (p.17)."

("Insait long baibel bilong tok Inglis yu inap painim i stap long II Esdras (Apocrypha) na i tok: 'ol wok bilong New Apostolic Church'. God i kamapim wanpela sios tasol na em i no senisim yet.")

The formulation implies that the New Apostolic Church is firmly anchored in the Bible, and that God himself built the NAC. Since he only made one Church, and has since then made no amendments, it reads that all the other churches, mainly the Catholic Church, are false churches.

"Jesus told Nicodemus: if you are not renewed by water (baptism) and by the holy spirit (sealing), you will not be able to go to the kingdom of heaven (p.23, my insertions)."

("Jisas i tok long Nikodemus: sopos yu no kamap nupela ken long wara na long spirit, yu no inap i go long kingdom bilong heven.")

This infers that sealing is a necessary prerequisite for entry into heaven. As the NAC is the only church that follows this ritual, only NAC followers will go to heaven since, as is shown below, their names are entered in the Book of Life.

"In this holy work (sealing), man receives the mark of the lamb and his name is entered in the big book of life (p.24, my insertion)."

("Long dispela holi wok, man i kisim mak bilong pikinini sipsip na nem bilong en i go insait long bikpela buk bilong laip.")

"This eternal message that comes from the New Apostolic Church is not just an empty story – no, it is an offer God has made and sent to help us humans on earth. All those people who follow and obey shall receive a large payment (p.34)."

("Dispela gutnius bilong oltaim i kam aut long New Apostolic Church i no stori nating tasol – nogat, em i olsem ofa God i salim i kam bilong halpim yumi man bilong graon. Ol husat manmeri i oraitim na behainim bai i kisim bikpela pe tru.")

Here, of course the use of the term pe (payment) is highly ambiguous and delusive. It can, of course, refer to spiritual reward, but the term also has a very mundane and tangible meaning where it refers to material or financial remuneration. Taking the millennial background and expectations into account, the term naturally is highly suggestive.

The second book again was not a real book, but the commemorative album in honour of the Chief Apostle's visit to Canada and the United States of America that I mentioned before. It was titled "Chief Apostle Visit to Canada and USA, June 1983". The album was bound in fake red leather, with the title and the NAC symbol inscribed in gold on the front. It contained very little text, but all the more photographs. The pictures displayed a

multitude of different divine services held in richly decorated churches, luscious banquets, with people sitting around tables overflowing with food and flower decorations, and various group photographs of the Chief Apostle and his apostles, standing in front of buildings, or shaking hands with smiling members of the congregation. The Red Book, as I came to call it and as I shall continue to do for the sake of convenience, first appeared in the village when Apostle Kumasi and the Canadian evangelist visited Warengeme in February 1985. It was handed to the NAC as a present from the Chief Apostle. It was passed around and the people looked through the photos quietly, sometimes commenting on the people's clothes, the flower decorations, or the rich tables of food. I never saw any more of the Red Book during my first fieldwork period, but when I returned to Warengeme in October 1987, I found that the Red Book had achieved a significance of quite different proportions. It was being safeguarded in the house of the deacon Henry Auinda, one of the principal leaders. It soon became obvious that the Red Book had, in the meantime, been closely read and scrutinized, and that its contents had been reinterpreted in the light of the existing millennial doctrine. What had initially been regarded as impressive evidence of the NAC's status in the world, was now looked upon as something like the "book of truth", akin only to the Bible. To the NAC followers the Red Book created an explicit link between what was implied and metaphorically inferred in the Bible texts and what was posited by the myth of Gai and Apel and in their world view. In this sense the Red Book is both the medium and the outcome of the millennial doctrine.

The most important part of the book, the part which spells out the relationship of Papua New Guinea (specifically the Wam) to the rest of the world, and the role of the NAC in the events to come, is the reproduction of a world map. The map originally decorated the wall behind the altar of the New Apostolic Central Church in Kitchener, Canada, on the occasion of the visit of the Chief Apostle. On it, the countries of the world are divided into three categories and colours. The red countries indicate those that are being administered by the Canada District, the yellow countries mark the so-called NAC worldwide nations, whereas green stands for future NAC countries. Papua New Guinea belongs to the red category. Each of the red countries displays a bright little yellow dot which indicates the NAC headquarters of each specific country. Hovering over Papua New Guinea, where on other maps the Micronesian islands are located, stands the symbol of the NAC, which is composed of the three elements, the rising sun, the Cross, and the sea in the form of stylized waves (see plate 11).

To the followers of the NAC the map reads as follows: the position of the NAC symbol over Papua New Guinea is of vital importance. Its proximity to PNG is regarded as the evidence that all creation began in New Guinea. God first made New Guinea, and New Guinea is the source of all wealth, power and religion. The New Guineans, say the Wam, lost their command over the power of creation through their own stupidity and their preference for growing yam and celebrating the tamberan, as is recounted in the myth of Gai and Apel. God's creation and power spread out from New Guinea over the sea – this is shown by the symbol of the waves – and the other nations around the world received the "divine light", for which the symbol of the sun stands. The little yellow dots scattered over

the nations of the world are the proof of this. They are described as the "highlights". There appears to be a contradiction in this, insofar as Papua New Guinea is shown with a "highlight", whereas Australia, which is otherwise associated with power and wealth, is not. This is explained in this way: Papua New Guinea is actually the legitimate heir to wealth and power because God created the world starting in New Guinea, whereas Australia only received the creative power through trickery and the ignorance of the New Guineans. Australia's wealth thus is not really authentic, because it is stolen, and Papua New Guinea is the rightful owner. In Papua New Guinea's case the "highlight" also heralds the imminent return of the "divine light", that is of Jesus Christ.

The "highlights" signify that God's authentic work is manifest in those countries and that they received salvation long ago, and that they now live in a state of paradise. However, God and creation are actually about to return to Papua New Guinea. Up till now, the wealth and power have been pocketed by the rich and the corrupt around Michael Somare and his henchmen from the Pangu Party who are in allegiance with outside powers. But, salvation is near and Jesus Christ is about to return. Also, this time it will be the genuine Christ. This is implied by the NAC symbol. The Cross displayed therein is unoccupied, unlike the crucifixes seen in the Catholic Church, which show Christ on the Cross. How can Christ return, the New Apostolics ask, if he has already found his place on the Cross and is shown there? The vacancy of the New Apostolic Cross is interpreted to mean that Christ is still in heaven and waiting to descend to earth, more specifically to Papua New Guinea.

The exact date of the return of Christ is not known, but it will be heralded by two events. The first refers to the rise of the Melanesian Alliance Party to power, and the day that Bernard Narakobi is elected Prime Minister of Papua New Guinea, the second event is the long-predicted visit of the Chief Apostle to Papua New Guinea. Given the identity of the Chief Apostle, the second incident actually coincides with the return of Christ.

The map has much explanatory power for the followers of the NAC, but the Red Book contains a lot more information on the inscape of the New Apostolic Church, the nature of the apostles and, imperatively, on the identity of the Chief Apostle himself. It is mainly the photographs that offer these insights and which the NAC followers have studied carefully and reinterpreted in the context of the millennial doctrine. Above, I have suggested by which method this is achieved. Single suggestive items or motifs are pinpointed and selected from a given source, in this case the Red Book. They are then extracted from their immediate context, given a new or altered meaning, and placed together again to form a series of meaningful messages which fit into and, at the same time, become constituent parts of the millennial doctrine. Actually nearly every photograph is meaningful to the members of the NAC, but here I have chosen a set of six photographs – actually the six photos that were explained to me in detail when I was first shown the book – to explain how this de- and encoding works. The sequence in which the photos are shown is not of significance.

The first picture (see plate 12) shows an altar, richly decorated with flowers. The stage leading up to the altar is covered in red carpet, as is the chancel. Behind the altar, a group

of men in dark suits is assembled. They are, as the caption tells us, the district apostles and the Chief Apostle. At the front of the altar stands a huge golden crown. The other elements, such as the golden harp standing next to the crown, are of no importance to the picture's text. The hat gol, Tok Pisin for crown, is the key component of the picture. Crowns, not only in the Western world but in Warengeme as well, are associated with kings and queens and hence with sovereignty and rule; in fact it is often regarded as the symbol of ultimate power. The Queen of England wears a crown, at least that is how the people know her, and she is the sovereign of both Australia and PNG. The Bible also refers to kings and queens and, above all the others, there is one King, the King of Kings, and that is Jesus Christ. Together with God the Father, Jesus resides in the Kingdom of Heaven. Thus, in the religious and especially the millenarian context, the crown is automatically associated with heaven and divinity. For the NAC followers, the crown shown in the picture is not merely a crown, it is *the* Crown. It is the crown belonging to the Almighty. Since Jesus Christ and God reside in heaven, where the crown rests, and the Chief Apostle and district apostles are shown in a picture with the divine crown, then it is obvious to conclude that the picture was taken in heaven, and that the Chief Apostle and his fellow apostles are in some way directly related to the divine sphere or, at least, have access to it. The photograph is a first indication of the divine status of the Chief Apostle.

The next picture (see plate 13) shows us a preacher, in fact it is one of the apostles, standing in the pulpit. The wall behind the pulpit displays the symbol of the New Apostolic Church, the Cross, the sun and the waves. By chance, I suppose, the photo shows the waves of the sea protruding from the arms and shoulders of the apostle on both sides, so that it looks as if the apostle were fitted out with a pair of wings. Since the figure in the pulpit is an apostle and the only humanlike figures known to have wings are the angels (from the pictures and stories from the Bible) the conclusion is drawn that the apostles of the NAC are in fact angels. This idea is compatible with the first picture of the series, since angels, too, are known to reside in heaven.

The third photograph (see plate 14) seems to confirm the findings of the first two pictures. Here, actually, the caption is of more significance than the picture itself. It reads: "Los Angeles, California, U.S.A.". I was asked the meaning of this, but my explanation that it was a large city in the United States did not satisfy the onlookers. They corrected me and stated that Los Angeles really meant the "lost angels" and that, correspondingly, the figures in the picture were also angels.

The fourth picture (see plate 15) in the series shows a group of apostles sitting at an oblong table. The Chief Apostle is seated at the head of the table, with district apostle Kraus to his left. On the table there is a bouquet of flowers and some drinking glasses. There is nothing spectacular about this picture, but for my informants it was most meaningful, because what looked like a table to me was in their eyes the lid of a coffin. The apostles were solemnly watching over a coffin. This was taken as evidence that the ancestors, or the dead in general, played a very much more significant part in Christian belief than the Papua New Guineans were ever made to believe. The dead must be playing a pivotal role in the world, otherwise the Chief Apostle and his apostles (angels) would not

be watching over a coffin, my informants maintained. It confirmed their belief that their own ancestors, too, played a central role and that they were engaged in the production of material goods and wealth, as recounted in the descriptions of Sorom.

The "factory" in heaven which produces money and other forms of goods is the scene of the fifth picture (see plate 16). It shows the 107 apostles with the Chief Apostle assembled in front of a factory-like building which bears the company plaque "Kraus Carpet Mills". Since district apostle Kraus is also accorded divine status – he is identified as God the Father – the NAC followers have drawn the conclusion that a building bearing the name "Kraus" is located in the kingdom of heaven and must be producing an unending flow of material goods. This, again, fits in the with the idea of the apostles' worship of the dead and the notion that Wam ancestors are active in the production of wealth.

The last picture in the series (see plate 17) provides a pragmatic link between the villager and the vision of heaven, as offered in the Red Book. It shows a group of people of various colours – white, black, and Asian – standing in the entrance hall of a building which, the caption tells us, is called "Skylon Tower". At the back there is a notice board with information about the building and the access to its various parts. Two messages stand out from the rest. The first is "Ride to Top", the second is "Ticket". Translated into the NAC's millennial perception this reads that for a journey antap, i.e. to heaven, where evidently the Chief Apostle resides (he is also shown in the picture), one needs a "ticket", which again is interpreted as meaning a membership card of the New Apostolic Church. Such a picture is regarded as the visual evidence of such passages from the small NAC booklet I quoted from above, where it says that Jesus gave man the holy sacraments of which he must be in possession in order to enter heaven.

The final conclusion the people, i.e. the leaders of the NAC and their followers, have drawn from the Red Book concerns the identity of the Chief Apostle: he is nobody else but Jesus Christ. I do not believe that this identification of the Chief Apostle with Jesus Christ is part of the official doctrine of the New Apostolic Church, although Roscoe implies something of the sort (cf. Roscoe, in Camp 1983:85). He functions more like God's representative on earth, in a similar position to the pope in the Catholic Church. But in the village version and view he has been raised to divine status:

"The Chief Apostle has many names and he keeps changing his names. He keeps changing his appearance all the time, so we concluded that he is the true son of God. God is his father, and he is God's true child. He keeps changing his looks, sometimes he is fat, other times he is long and thin, his teeth at the front here, sometimes they are broken, other times they are straight, from time to time they look crooked; sometimes he becomes a child again, so we concluded, God has promised him to us, he will be our Head Queen (hed queen bilong yumi). He will be the leader of Papua New Guinea."[9]

The only other NAC official who is identified with a divine figure is district apostle Kraus, at the same time the author of the NAC booklet quoted from above. He is God the Father, but his role in the drama about to enfold is secondary to that of the Chief Apostle. When the time is ripe, God will send his son to Papua New Guinea, and this will mark the beginning of "paradise". The Chief Apostle's visit to Papua New Guinea is an event that

the people have long been expecting, and the visits of various apostles over the last few years are regarded as events heralding the arrival of the Chief Apostle in the country. The return of Christ will be precipitated by the rise to power of the Melanesian Alliance Party, and the election of Bernard Narakobi as Prime Minister of Papua New Guinea. Sometimes the sequence of the coming events is turned around, and it is believed that the return of Christ will effect the MA's rise to power. The important point is that the two events are believed to coincide.[10]

The events of the "last day" and the time that follows are still rather shrouded in the mists of uncertainty. Apart from the fact that the "day" *will* come, and that it will be in the near future, the people adopt a we-shall-see attitude. The exact details are not known but as such they are not really so important. Nevertheless, the people do have a notion of the general outline of the future, and some of the basic features of coming events. On the "day" there will be no great cataclysms such as earthquakes, floods or thunderstorms etc., such as are encountered in other movements. Christ will return quietly and unobtrusively, olsem stilman, the people said: like a thief, and he will be accompanied by the ancestors of Sorom. The believers will briefly lose consciousness and then they will be revived by their own close ancestors. For this reason – the hurried revival – the NAC followers maintain it is important that the dead should be buried close to the houses of their living relatives and not in the public cemetery, which in Warengeme, although centrally located, is regarded as a neutral zone and no-man's-land. Also the graves should be cleared of all traditional forms of decoration, mainly different cordylines, because these would hinder the ancestors' return. In practice, however, this was never put into effect.

The fate of the unbelievers remains unknown. The utterances of some of the NAC leaders on different occasions suggested that the adherents of other denominations and traditionalists would not be able to enjoy the blissful state of paradise, but it was not specified what would happen to them instead, i.e. whether they would die or be taken to some other place. Sometimes the New Apostolics spoke as if the unbelievers, and especially the explicitly anti-NAC-oriented persons, would be demoted to a status of inferior rank, but this was not elaborated on in detail. The assurance of their own salvation was more important than the uncertainty of the fate of pagans.

One certainty refers to the notion that salvation will become manifest in the location where the people are presently living, and not in some metaphysical realm outside the Wam people's experience. The "Holy Town" and the "New Jerusalem" as foretold in the Bible and more vividly in the little NAC booklet will be established in the Wam area. Paradise will come into existence here and will not lead to an exodus to West Papua and Sorom where the ancestors are presently residing. The concept of paradise has at present a spatial dimension – it is everywhere except in the Wam – but as it is interpreted for the future it is a state of existence.

Material considerations constitute one aspect in the millennial vision, but they are not the only side to it. To the question "what will paradise look like", the answers emphasized not so much material gains or the command over an unending supply of planes, cars, and houses as such, although they were also important, but more with the general notion of

freedom and the social implications of an unending material affluence. Mipela bai stap free, was the statement I heard most often: we shall be free. The adjective "free" has the same semantic scope as its English counterpart. It implies, firstly, an autonomy of will and choice, secondly, the absence of imposed dictation from above and outside and, thirdly, the capacity to acquire goods and services without payment. In the prevailing setting the three dimensions of the term "free" are believed to be causally linked. Material goods at the moment are not free, because the Papua New Guinea villagers are subject to outside domination, nor are they autonomous in their decisions. The terms are still being dictated by the encapsulating system.

There would be such an abundance of goods, both traditional and modern, freely available to people, so that they would no longer have to work. Yam, taro, bananas, to name but a few, would grow on their own, the bush would be abundant with pigs again, people would be able to obtain goods from the trade-stores without payment. Thus, there would be no need for the people to grow coffee any longer and they would no longer require money to pay for goods and services. It is an interesting point that, in the present state of things, the absence of a valid and an intrinsically valuable currency of their own is regarded as one of the principal deficiencies responsible for the unequal distribution of wealth and power, and for the partition between an "omnipotent" and a "powerless" world. On the other hand, when the state of paradise is achieved, there will be no further need for money because everything will be free. Money, too, the people maintained, will be abundant but people will no longer require it. Thus, money acquires the status of being a symbol rather than being a pragmatic means of satisfying needs and wants. It metaphorizes the present situation of the villagers in relation to what they perceive as an outside world of excessive affluence. Once they themselves become members of this affluent society, there will be no more need for the symbol of inequality.

The concept of freedom also includes the abolition of what are considered as oppressive institutions such as the village court or the council system with its council tax. Schools, too, which are regarded as being highly selective, and thus inimical to the simple villagers and their children, will no longer be a necessity. The notion of freedom relates to those government institutions with which the villagers come into direct contact and which the NAC followers in particular feel burdened by. When the "day" comes, it is said, the Melanesian Alliance Party will rise to power and rule the country, but at the same time there will be no more need for a government because all goods and services will be provided, and there will also be no more social injustice. The people will have no more need of outside rule; society will regulate itself. Village courts will no longer exist because the Wam will be a society without conflict and one in which crime and deviation are absent. Jealousy, competition, spite and envy, hallmarks of the present situation in Wam society, and in Papua New Guinea in general, will no longer prevail. Because everybody will have everything he or she needs or desires, stealing, cheating and exploiting will become redundant. Most important of all, the Wam will finally be rid of sorcery and sorcerers. The days when the Wam killed each other out of jealousy and because of land, sago patches, bride prices and open debts will be over. There will be no illness and

suffering. The Wam will have attained komuniti at last. They will have turned a full cycle and will be back to where Yelebiel left them before she died, and before Gai initiated the Wam to their present cultural form.

NOTES:

[1] Vanimo is the border town to Irian Jaya on the northern coast.

[2] One must not forget that the term "paradise" is a widely-used concept in Papua New Guinea in commerce and advertising. When one travels with Air Niugini one travels on a "Bird of Paradise" flight, billboards and newspaper ads invite the reader to spend the weekend in "Paradise" in one of the luxurious coastal or island resorts, in the trade-stores in Maprik and Wewak one can buy merchandise of different kinds carrying the brand name "Paradise", women's laplap sometimes have "Paradise" printed on them. New Guineans appear to be surrounded by "paradise" but for most of them it is unreachable. Affluence and wealth are all around, but somehow they appear to have bypassed the Wam.

[3] Lawrence Peimel, priest of the NAC.

[4] I was never able to elicit who the other six centres were inhabited by, or whether they were inhabited at all. Possibly the ancestors of neighbouring groups resided there. It appears to be of no significance.

[5] Both statements made by Lawrence Peimel, priest of the NAC.

[6] Statement by Lawrence Peimel, priest of the NAC

[7] Recounted by Henry Auinda and Lawrence Peimel.

[8] The text is from a published NAC newsletter that Brigitta Hauser-Schäublin was allowed to photograph in the field and which she kindly placed at my disposal.

[9] Statement by Lawrence Peimel, priest of the NAC.

[10] In 1987 the Melanesian Alliance was already in power, in a coalition government with the Pangu Party. This, however, presented no contradiction to, or refutation of, the existing doctrine. It was stated that the MA had joined their archenemies in order to be able better to watch over them and counteract their deceptive schemes and, thus, gradually prepare their own rise to supremacy and power. Nor did the fact that John Momis, one of the leading politicians in the MA party, was a Catholic priest disturb them. It was believed that Momis had recently secretly denounced his allegiance to the Catholic creed and joined the New Apostolic Church, but officially remained in the Catholic Church in order to monitor its moves.

CHAPTER SEVENTEEN

THE MOVEMENT AS A CHURCH

Until now I have been occupied with the New Apostolic Church doctrine and the ideological construction, comprising the mythological foundation, the postulates of the official NAC, and the synthesized world view resulting from a blending of the two approaches. In the following, I return "back to the ground". I deal with the NAC as it manifests itself in the village, with the strategies employed in preparation for the millennium, its organization, its leaders and, most important, with the contents of the messages relayed within the church services.

Before setting out on this task, I have two preliminary remarks to make concerning the NAC activity pattern. The NAC's strategy in pursuit of the millennium included no kind of action or behaviour which otherwise, and with reference to former movements, has been described as "cargo ritual" (Gesch 1985:97), understood as the application of thaumaturgical methods for accelerating the advent of the millennium, creating wealth, accumulating or reproducing material goods, or guarding and watching over graveyards with the aim of reviving the dead. All the activities of the present movement were concentrated on and restricted to the church, and the only rituals I observed were those which formed part of the liturgy, which in substance did not differ from those performed in other denominations. It was only during one short period that the rumour went around that some people in Selni (members of the NAC there) were going to attempt to produce money in the form of bank notes which displayed the head of Mathias Yaliwan, the former leader of the Peli movement. When the appointed day arrived it was raining hard, and nobody went to witness the act. The leaders of the NAC Warengeme clearly dissociated themselves from such methods and claimed that their church had nothing to do with this kind of activity. Nothing more was ever heard about this incident and, apparently, it never took place.

The people did have notions of what they should do and what kind of conduct they should display in order to guarantee the arrival of the millennium. However, these did not concern the implementation of new rites but rather the abstention from prevailing usages and habits. In expectation of the return of Christ, the people, the leaders of the NAC proposed, should refrain from smoking, chewing betel, and consuming alcohol, whereas the consumption of pork – generally an element strongly associated with traditional culture – was not forbidden. Further, the church members were requested not to visit any form of traditional dances or ceremonies, even when these were being performed as nominal entertainment events such as tumbuna singsing. The instructions also referred to the sphere of social and family relations. There should be no more wife-beating and child abuse, and in their relationships with other men and women, they should refrain from slander, verbal abuse and all other forms of aggressive behaviour. When they themselves were wronged, they should not revert to retaliation, but leave judgement to God later. In reality all these new rules remained ideological and were never put into effect. The people merely spoke of them, thereby suggesting an image of what society should look like in an ideal state and, at

the same time, expressing their disapproval of the state the village was actually in. When asked when these new codes of behaviour were to be implemented, the answer was always "very soon", since the millennium was approaching very quickly.

The second remark refers to the way the people, especially the leaders, dealt with the two sides of the New Apostolic Church, the ecclesiastical and the millennial dimensions. What I have tried to describe above as the (millennial) NAC doctrine and world view has no place in the NAC as a church, at least not in its explicit form. As such it is not the official or accountable doctrine of the church. In the church, the leaders closely adhere to the Bible and the canons of the authenticated Christian dogma. They make no open references to the millennial side of their convictions. For analytical purposes at least, one could make a distinction between the NAC as a movement, which comprises the totality of notions and convictions, and the NAC in its manifestation as a church, where the millennial references are ostensibly absent. But since the contents of the sermons, prayers and rites are based on a mutual and common body of knowledge that is shared by all members, and which includes the millennial aspects, even such passages or statements in church that do not directly refer to the millennial doctrine contain a deeper significance because the names, terms, or concepts referred to are often polysemic and have a hidden meaning which is understood by the congregation. I shall return to this point later. However, to reiterate, in church no explicit reference is made to millennial ideas or expectations. These topics and discussions are reserved for other occasions, outside the church. To a certain extent this is also a protective strategy against accusations of "cargo cultism" which are frequently raised by opponents of the NAC. Superficially there is nothing "cargoistic" about the New Apostolic Church.

CHURCH ORGANIZATION

The church building of the NAC is a low and inconspicuous construction in the hamlet of Eimuteneme, where the road forks, one branch leading to Selni village, the other to the Catholic Mission station. It is built on land belonging to a man from the Butelime line (W1) of Warengeme who is a member of the NAC and who lives next to the church, with his wife and children and the family of Michael Mahate, one of the NAC priests. From the entrance, an aisle leads between makeshift benches to the left and right up to the altar. The entire church is built of bush material and was erected by members of the NAC themselves. Behind the altar there are benches where the priests and deacons are seated during the service. On Sundays the entire church is decorated with flowers and palm fronds. Above the entrance and attached to the altar there are photographs showing the Chief Apostle and some of the district apostles. In 1987 these had been replaced by new pictures of the Chief Apostle together with his wife, called Sister Ursula.

Sundays and Wednesdays were the days of service. Attendance in midweek was usually very low, but on Sundays the church was usually full. The service lasted for about forty-five minutes. Compared with the Catholic Church and the SSEC, where a lot of emphasis was placed on singing and the active participation of the congregation, the NAC service was a very subdued and solemn affair. There was a clear distinction between the

leaders, who shaped the event and officiated during the whole service, and the led, the congregation which, apart from some rather hesitant attempts at singing, remained passive and listened to what their priests and deacons had to tell them.

The service began with a song and prayer. The reading of the Bible passage and the sermons formed the main part of the service, at least in terms of duration. The Bible was normally read by one of the deacons and was followed by one or two sermons held by the priests, or a deacon and a priest. Next was the Lord's Prayer and the act of Holy Communion, during which one of the priests walked down the aisle, laying the host in the hands of the believers and speaking the words "bodi bilong Krais" (body of Christ). A song and a last prayer, terminating in the threefold chanting of "Amen", ended the service.

The official clergy of the NAC consisted of five men in 1987. Two of them held the rank of priest, the other three were deacons. They often took turns in officiating during services. The distinction of rank, however, was unobtrusive. During the service, they were all dressed in the traditional NAC uniform of black trousers and white shirt, which clearly set them apart from the rest of the congregation. Usually all five were present during the service although only two or three played an active role. For a short period in 1985 a subdeacon was engaged, with the idea in mind that he would translate the Bible passages from Tok Pisin into Wam for the elder members of the congregation. However, there was more to this scheme than merely providing a service for the elder villagers. The man elected for the position was a man from Warengeme 2 where the NAC had hardly any followers and which was safely in the hands of the Catholic Church. The choice of a man from Talkeneme was clearly an attempt to set foot in the lower half of the village and to expand the sphere of influence beyond the boundaries of Wohimbil and Warengeme. The strategy however failed for a number of reasons, and when the subdeacon resigned after only a couple of weeks he was not replaced.

The five men that formed the official leadership body were the two priests Lawrence Peimel and Michael Mahate, and the deacons Henry Auinda, Matthew Melange and Patrick Sali (see plate 18). The five men had a number of traits in common. They were all native born Warengemes. More specifically, they all came from Warengeme 1. Peimel, Henry, Patrick and Matthew were from Wohimbil, Michael was from Warengeme. They all belonged to approximately the same age group of young adults, that is they were men between the ages of 25 and 40. All five were married and had children. In genealogical terms, Peimel was clearly the most senior member of the leadership body. The other four men either stood in an *agel-ningal* (F-S), or an *anheil* (MB-ZS) relationship to him. Michael, Patrick and Matthew stood in close *meinheil* relationships to each other. Michael and Patrick were *meinheil* by marriage (they had exchanged sisters), and Matthew and Patrick were *meinheil* by matrifiliation (Patrick's mother was Matthew's father's sister).

With the exception of Peimel, the leaders had all experienced some form of education and were literate. Henry and Matthew had had six years of primary education plus an additional year of vocational training, Michael had reached grade six before the Aresili School was built, and Patrick, the oldest in the group, had two years of primary education. In 1975, he had also attended a course for pastoral work for several months, organized by

the Catholic Church in Wewak. Together with Michael, he had the most experience in church matters, and the soundest biblical knowledge. Originally they had all been members of the Catholic Church. Three of them, Michael, Matthew, and Patrick had been active workers for the Catholic Church in earlier years. Until he left the CC to join the NAC in 1986, Patrick had held the position of a prayer leader in the church and was regarded as one of its most reliable workers. In 1984/85 he had conducted a survey on marriage in the village for the CC, and one of the stated reasons for his defection was that he had never been remunerated or even been shown gratitude for his work by the CC.

The three main actors on the NAC stage clearly were Peimel, Michael and Patrick, whilst the other two played important but subsidiary roles. Before Patrick's entry into the NAC, it was Michael and Peimel who governed the scene. By chance or design, the two men had different rapports to the NAC and were responsible for distinct realms within the organization. Peimel was more directed towards the millenarian aspects and political contents, whereas Michael was more church-oriented, more religious in an orthodox Christian sense. One could say that Peimel represented the NAC as a movement, Michael the NAC as a church.

Their roles were complementary. Both officiated in church, preached, and dispensed Holy Communion, but whereas Michael restricted his engagement to the church, Peimel was the primary figure in developing and disseminating the millennial doctrine outside the church. Tubilme, the old Peli centre and Peimel's hamlet of residence was the focus and main meeting place of the millenarian activists. One of Peimel's closest supporters and co-workers was Henry Auinda. In contrast to Peimel, he was literate, and one of his main contributions was to relate the contents of books, pamphlets and other written material to Peimel. Despite being illiterate, Peimel had quite a sound knowledge of the Bible, at least of those parts which were of relevance to him in terms of the millennial doctrine. A second important figure was an older man called Nimbalme. He too was from Wohimbil and had been, in earlier years, one of the active leaders of the Peli movement. He had no official function in the NAC but could be described as a mentor to Peimel on many millenarian issues. He was a bachelor and lived with Peimel and his family in Tubilme.

I have no intention (nor would I be qualified for the task) of offering a psychological analysis of Lawrence Peimel, but in order to shed more light on the movement and its position in the general setting of Warengeme, I have to say something about this influential and complex figure. In many ways Lawrence Peimel was a very inconspicuous and quiet man, far from what one could call a charismatic figure. At public meetings he hardly ever spoke, and when he did have to, usually to counter accusations against himself or the NAC, he did so hesitantly and nervously. His field was more the smaller group or the assembly of followers where he knew he had the support of his listeners. There he became the thinker and schemer, there he could expound his ideas, interpret or predict events and theorize on accounts or rumours given by others. His arguments always sounded convincing, often because his listeners could not offer a better explanation of such intricate matters as the functional mode of radios, the source of material wealth, or the conspiracies of Michael Somare. He was imaginative and his theories and explanations always

contained a logic and a rationality of their own which, if it did not convince the people, certainly set them thinking. However, his influence off-stage was indirectly proportional to his public image, which depicted him as a rumour-monger, a "cargoist" and a trouble-maker. Many of those people in the village who, through their silence and passivity in public, helped to sustain this negative image, were personally not necessarily so convinced of the falsity of some of Peimel's ideas and theories. But the fact is that those people who were responsible for the shaping of this negative image of Peimel did not themselves have the broad support of the other villagers, so that the priest of the NAC in some ways became a symbolic figure of resentment and opposition against the group of image makers centred around the councillor, the village magistrate and a few other prominent men.

Peimel's rather ambiguous public image in the village was cushioned by the role and personality of the second priest in the NAC, Michael Mahate. There was nothing ostensibly "cargoistic" about him, and it was largely through him (and later also through Patrick Sali) that the NAC could uphold its claim of being a regular and legitimate church. When accusations were raised against the NAC as being a "cargo" movement, it was usually Michael who was able to refute any such allegations convincingly, often with the argument that anybody was welcome to visit a church service and see for themselves that nothing else but the worship of God was being done there, which, of course, was not untrue. Michael, and later on Patrick, was the man who spoke the prayers on behalf of the NAC at the opening of public meetings and thereby lent his church a certain degree of credit and credibility among the villagers. Actually, in the form that Michael transmitted the message of the NAC, it was not more eschatological than that of any of the other denominations.

The New Apostolic Church's status and image were further enhanced when Patrick Sali deserted the CC and joined the church in Eimuteneme. Officially he had turned his back on the "old contract" because he had never been remunerated or been shown gratitude in one form or another for all the work he had done. But this was no more than the immediate cause of his switch. The deeper reason, I believe, is to be sought in the situation he found himself in at the time. Not only had his father been an ardent follower of both the Peli and the NAC movement until his death in 1985[1], but his entire immediate and intermediate relationship network was recruited from members of the NAC. His mother, siblings, wife, matrilateral kin and consequently also his affines, were all NAC followers. Michael, in fact, was his immediate *meinheil* through marriage. Many years ago Patrick had left his parental hamlet of Wahute in Wohimbil and gone to live with his cross relatives in Warengeme (Michael's line) who were all followers of the NAC. After the death of his father, Patrick, being the eldest son, took over the responsibility for his family's estate and affairs. At the time of his move from the CC to the NAC, he was directly involved in a number of land disputes in which he was trying to retain some tracts of land for his younger brothers, by whom he was being approached with the demand that he, as head of the family, should show them where their land was. From his fellow Catholic parishioners he could not expect help in these matters because, by and large, all his significant social links lay outside the Catholic congregation, and the people he could

rely on and claim advice and, at least, moral support from were members of the NAC. It was very much in the interest of the NAC itself, or course, to pull Patrick over, due to his knowledge and experience in church matters, and his reputation as a church man. So when the Catholic Church turned down or, at least, showed no signs of meeting his demands for remuneration, Patrick did not hesitate to change denominations.

Patrick's entry into the NAC resulted in an increase in new members and an upsurge of activities in the church. A Bible school on Sundays was established and led by Patrick, and they also introduced a roll-call system with which they hoped to bring about more discipline in terms of attendance. How effective these measures were in making the people better churchgoers I cannot say, but it certainly had the effect of further cementing the NAC's claim of seriousness, and discarding the image of "cargoism". Patrick's presence also strengthened Michael's position and gave the church's more orthodox side additional emphasis and profile. Although Peimel remained the leading figure in the organization of the movement and the person the eschatological aspects of the NAC were geared to, he began to play a less prominent role during church services. His position was partly taken over by Patrick, whilst he himself remained more in the background.

All in all, the New Apostolic Church had put on a more regular and orthodox Christian face in 1987/88, but it should not be forgotten that the distinction made between the church and the movement, and the millenarian ideology and the Christian doctrine, is primarily an analytical distinction and, on occasion, a strategic decision made by the followers in order to refute accusations of "cargoism". But in essence, for the NAC followers the contents of the church activities and the millennial ideology were not disconnected, but were complementary and compatible. Following the Bible and the liturgy, and adhering to the strict standards of Christian behaviour constituted the appropriate ways and means of achieving the aims and attaining the vision spelled out in the millenarian doctrine.

THE NAC LITURGY

Next I discuss the contents of the church services and, chiefly, the sermons in more detail. The sermons constituted the main part of each service, certainly in terms of duration. Usually, two or three such sermons were held in the course of each service. They are important for a number of reasons, mainly because, through the mediating role of the preacher, they establish epistemological linkages between the millennial ideology – a product of indigenous rationalization and theory-building – and the Bible in its quality as the source of the "absolute" truth. For many members of the New Apostolic Church who were either illiterate or did not possess a Bible of their own, the sermons provided the only access to the contents of the Bible, and it was through the sermons that the people received information on, and confirmation of, the prevailing notions concerning the "order of things".

All five members of the clergy held sermons alternately, using passages from the New Testament as their texts of reference. The range of topics, stories and allegories was very wide and, although each sermon constituted a message complete in itself, one can discern

four main themes which pervade all the sermons and which constitute the basic fabric of the "Christian" side of the NAC doctrine.

Below I present an extract from such a sermon. It was held by deacon Patrick Sali. The extract, firstly, serves as an illustration of this kind of preachment – it is a typical sermon – secondly, the quoted passage contains these main themes mentioned above; three of them are referred to explicitly, the fourth is implicit. I shall then go on to discuss each one of these themes, incorporating examples from other sermons as I proceed. The quoted passage is based on a passage of Paul's letter to the Ephesians.[2]

> "This good news [message] goes into the thoughts of each one of us fathers, mothers, brothers, sisters and young people. But in the eyes of God and the Son, when we all meet, we can see it as well: many of us are in a bad shape! Inside this 'holy house' of each one of us it is a pitiable sight. It is full of dirt. Many of you, you come to this meeting within this 'new contract' God has established on this earth, you come and listen to this good news we are offering, and we don't hold back anything, or give you any kind of 'hidden talk', no, we tell you exactly the words of Jesus Christ as they are written in the Holy Bible. We don't hide or change anything, we give you the straight story. What our brothers and sisters do in the other 'contracts' [churches], that is their business. They twist and turn everything, and they hide the true words of God. Many of them say, Jesus is not able to come back. Mother Mary gave birth to him, and he died when they nailed him to the Cross, so he is not able to return. They killed him and he is dead, and he went back to his Father. But he was born [again] and he is in the care of God the Father who is preparing him for his return to this world. Many of us, we come to church to listen, but then we go outside again, and many of you say to yourselves, ooh, I've been waiting for a long time now and they keep telling us something will happen. But we haven't seen or got anything yet, no, they are just 'greasing' us [giving us sweet talk], so I'm just going to do what I like from now on. But when God marks the day for his return, then we shall all be back again, and meet at this holy altar of his. If he says he will come back then he will do so. But we all must prepare, each one of us must clean his 'holy house', get rid of the dirt and be free and clean in the eyes of God, according to his will. We must go and show all our brothers and sisters what there is to do. ... . But we black people, we don't do this, my fellow man is my enemy, you're angry with him simply because he is your wantok [one talk = fellow villager]. But the white man, he is a different kind of man, so I'm afraid of him. He will kill me, or use the law against me, or put me in jail. But amongst ourselves, amongst us black people, this isn't so, you behave wrongly towards your fellow-man, and you beat him and fight with him, because deep down in your heart [bel = stomach, belly] you don't love this other person, this sister or brother of yours.
>
> In this good news, we are telling the truth about Christ, and we are not hiding anything when we say Christ is going to return. But we ourselves do not know the hour, or the day, or the year, or the month when God Father will send his son to collect us, and we shall meet in paradise and in this holy place which he has prepared for us, and where we shall meet with him. Many of us come to listen and hear these words, but then some

go outside again and pick up a stone that is lying around, and throw it back at us. These [people] are liars and deceivers. We try hard to bring you into this church here, but you too must try hard to earn this present of God which he has prepared for us, and which is waiting for us in this holy place. But you say to yourself, no good I try hard and then another man will get it, and then I shall be sorry and disappointed. You'll say, I too tried hard, so why did I not receive it, but this other man instead. That's how you think, but we're not hiding anything. But many of you, your 'holy houses' are in a bad shape. You go outside and join in all these bad habits and evil ways again, you turn your backs on us and say, nothing will happen anyway, so I'll just care for myself. But we're trying to strengthen you in your belief, so do not go outside and cause trouble and slur the name of our church, it is God's church, it was not built by man, it was founded in the will of God and his Son."

One can identify three basic themes that keep recurring in this sermon extract explicitly: Firstly, that Wam society, or Warengeme village at least, is at present, in a desolate state; secondly, that the NAC is the only righteous church through which salvation will be attained; and thirdly, that Christ is definitely going to return to this earth. The fourth postulate, which is implicitly referred to in this passage, relates to the claim of equality between all humans in the face of God. This theme stands out more pointedly in other passages, and I shall return to it in due course.

The first message this, and other sermons, convey is that Wam society and its individuals are morally in a desolate state or, to be more precise, they are *still* in a state of destitution. It is not that the Wam are intrinsically bad, or inferior to other people – one of the claims of the millennial doctrine is that the Wam too are God's children – their problem is that they are still enmeshed in kastom, in the old traditions and culture which have their origins in the events recounted in the myth of Gai and Apel. It was Gai who chose the wrong option and voted for the adoption of the traditional Wam culture, instead of following Apel's wishes and instructions. In another myth, it is recounted how Gai, this time in his identity as Wohi, the cultural hero, brought the essence of Wam culture from Mehet – the tamberan and sorcery – in two coconut-leaf baskets and introduced the people to the present cultural pattern. It is this "fatal" incident which the Wam are still burdened with. This view implies the notion that the Wam regard culture not as an unchangeable, inherent essence of their human existence, but as something that has the corporeal quality, manifest in a pattern of beliefs, values, and cultural codes. The Wam are not culture, they *have* culture. It is something they once adopted, and this implies that they are also in a position to discard it, if they wish, and adopt a new cultural form. However, this step has not yet been taken, although the New Apostolic Church believes itself to be on the verge of doing so, and Wam society is still riddled with traditional values and patterns of behaviour.

"Olgeta pasin i stap yet", was the way deacon Matthew put it on one occasion: all the old habits are still here. Wam people are not only still conflict-ridden and violent, as we can gather from Patrick's sermon, they also cling to their old customs and beliefs, which stand in sharp contrast to the teachings of the Bible; at times, these habits are actual sacrileges. For instance, in one of his sermons, deacon Matthew demanded that the

traditional funeral feasts should be abandoned because they were incompatible with the rite of Holy Communion. By analogy with the symbolic consumption of the body of Christ, he maintained that what the people were actually doing when they ate yam and pig during funeral feasts was consuming the body of the deceased kinsman. This was utterly wrong morally because what it meant was that the human body was being placed on the same level as Christ and thus raised to divine status. This was a cardinal sin. In general, Matthew believed, it was wrong to mourn the dead because it implied that the deceased had departed for ever. This was not only a false belief, but also a sign of lacking faith, because it was known that the deceased would return to be united with their living kinsmen on the occasion of the return of Christ.

Such events as funeral feasts were not only sinful for the above-stated reasons but also because they provided occasions for ostentatious self-presentation and the accumulation of prestige and status through the display and distribution of yam and pigs, corporeal hallmarks of kastom. Status and prestige in the context of traditional culture and kastom, it was believed, was only attainable at the expense of others and it fostered jealousy and rivalry which, in turn, led to conflict and strife. Furthermore, it was said that the people were more concerned with their outer appearance, their personal reputation as bigmen, and material gains, than with the promotion of spiritual values and the inner self. Using the allegory of "God's holy house", which designates both the individual as well as the congregation as a whole, the metaphors of dirt and darkness serve as images of the current state of destitution. This is in contrast to such images as the "highlight" which marks the presence of Jesus Christ and a state of purity.

In one of his sermons, Michael drew the comparison between Jesus and Judas. He said that belief according to the NAC would lead to Jesus, but the Wam were at present following the path of Judas. The people were preoccupied with personal enrichment, in the process of which they did not even refrain from cheating and stealing from their fellow villagers. Moreover, Michael claimed that the village court, instead of being an institution for solving conflicts and offering reconcilement, was a means people were reverting to in order to extract money from their neighbour – in the form of compensations – , and becoming rich at someone else's expense. This, the congregation was told, is what Judas did when he sold Jesus to the Roman soldiers.

Now that the NAC had come and was promising salvation, the Wam were facing the choice of either adhering to their traditional culture and beliefs, and remaining conceited, deceitful and backward, or of discarding everything that involved the notion of kastom, and accepting the "new contract" in anticipation of salvation. Although this was not explicitly voiced in church, the Wam were facing a decision similar to that confronting them in mythological times, when Gai and Apel, representing the two cultural alternatives, had to make a similar decision. The NAC stands for Apel, whereas Gai and kastom are still not only intimately linked, but actually synonymous.

The second recurrent theme we can extract from the sermons is the claim that the NAC is the only righteous church. The claim to this uniqueness is founded on the principal

premise that the NAC is the only church that has living apostles and that the Chief Apostle is identical with Jesus Christ.

> "We are the chosen line of Jesus Christ, and we follow the work of his apostles. ... . Now we have all received the mark of Christ who is amongst us; the apostles have come and told us that we are the chosen followers of Christ within this new contract of his. Today we are all a part of the new contract, we are all the true apostles of Christ."[3]

Between each member of the congregation and the divine power there exists a linkage which is established on the basis of the ecclesiastical order of priests, evangelists, and the various grades of apostle, up to the Chief Apostle, who is Jesus Christ, and God. The essence of this relationship is embodied in the concept of the Holy Spirit, which is transmitted to the individual through the act of sealing, a rite which again is peculiar to the New Apostolic Church.

> "All God's power is in the hands of the Chief Apostle. He is the head of the New Apostolic Church. The laws of God that we preach to the congregation in this world are not our ideas or doings. Whatever the Chief Apostle tells his workers in this church are the words of God. In our church, everything we do here is the work of God, we do nothing by our own will, everything has come from God, and he has given all his power to the Chief Apostle."[4]

The identity of the Chief Apostle and Jesus Christ is not referred to explicitly. It is mutual knowledge shared by all the members of the congregation, therefore there is also no need to make it explicit. It is mutual knowledge but also a kind of common secret, in the sense that many more people in the village than only the NAC members know of this conviction. But since it is not made explicit in church, it is, officially, and in terms of accountability, not part of the NAC creed. The sharing of this belief or knowledge without having to make it explicit publicly creates a strong feeling of togetherness, and demarcates the boundary between "them" and "us".

A further point that underlines their claim to uniqueness is the notion that the NAC is not an institution which is governed by outsiders, but an instrument which God himself has placed in their hands and which is operated by the people themselves.

> "... in our times, this apostle ministry [i.e. church] did not come from Port Moresby, it was formed on our own coast. It originated on our own land, and in the hands of our fathers and mothers. I'm telling you here it did not come from any other place, it originated on our own land. Now we are the followers of this new ministry."[5]

Port Moresby stands as a symbol of foreign involvement and government dictation and is placed in contrast to the native land and its residents, meaning the Wam of course, who have been here since ancestral times. Unlike the Catholic Church, which at the time still operated with a staff of largely expatriate missionaries and conveyed an organizational structure from which the villager feels basically excluded, the NAC sees itself as a village-based, grassroots church. The "new contract" is a covenant between the local NAC followers, NAC congregations of other villages, and Jesus Christ and God, which does not need outside involvement to achieve its aims. The apostles that from time to time visit Papua New Guinea are not regarded as representatives of some super-ordinate clerical

organization, but as mediators who stand between God in heaven/Canada and the villagers and who convey divine messages and information about the events that are about to happen.

> "We no longer carry the mark of Noah. In these times we cannot be under the rule of some government or some other person any longer. Today we follow the will of God. God himself will make things on this earth change, I'm telling you the truth."[6]

The reference to the mark of Noah in this passage is a metaphor that describes the past times up to the arrival of the NAC in the area and the beginning of the "new contract". It is a notion similar to that in the account of Mathias Yaliwan's visit to Mehet, where he felled the old tree, marking the old testament, and planted a new one, symbolizing the new testament and the new order. Here the reference to Noah implies the same. It means the end of the "old contract" and the domination through the Catholic Church, and the beginning of a new period under the care of the only true church.

"This church of ours is not just a game we play [i.e. insignificant]. Our church will carry the earth [rule the earth], it is the *marme tuhalmbe*[7] of this earth. When the day comes we shall not have to try hard, no other country will rule us, no, we shall be for ourselves. Our name will be, brothers and sisters gathered here, we shall be called Melanesian Disciples. We shall be called that. I shall be a disciple, you too will be disciples, all of us!"[8]

The believers should carry no doubts about the future. God will bring changes to this world when he returns his son to us humans. This return of Christ, the second coming, is the third main theme of the sermons. What the world will look like, and what these changes will entail in detail is not made explicit in church. The preachers limit their prophecies to references about the outer scenario. There will be no more government regulation and outside involvement, God will rule the earth, the people will be free, and the Melanesian Alliance party (MA) will be in power in PNG. More explanations are not given, nor are they necessary, the important point is that everything will be different from now on. The emphasis is placed on the event of Christ's return and its certainty, not merely to this world, but specifically to Papua New Guinea. The exact time of his return is not known, but it is imminent. The time that remains until his return is looked upon as a challenge, or test of faith. Not only are the people expected to undergo a fundamental change in their habits and behaviour, it is also a test of faith in view of the harassment, ridicule, and accusations the congregation faces in the village from representatives of the old order. Actually, the degree of harassment from the other villagers was lower than the followers of the NAC made it out to be, but creating a scenario of victimization naturally also promoted the feeling of togetherness and unity within the NAC movement. I believe the leaders on occasion, especially Peimel, overstressed this aspect in order to underline their own significance and status within the movement.

> "... there are many men of the law amongst us in these times who are trying to break us. Now I ask you, if we stand together, are we strong enough to carry this burden, together with Christ. If we are, then we will carry this burden and await the return of Christ to this earth, and he will come and collect us faithful brothers and sisters ... ."[9]

A crucial point concerns the preconditions of Christ's return where the state of affairs in Wam society are concerned; this constitutes the subject of the first theme of the sermons. One might think that the second coming was believed to be dependent on the degree of moral conversion in Wam society, i.e. on the extent to which they had discarded their traditional ways and kastom, and accepted the new faith and code of morality. But on the whole this was not the case. Only once during a sermon was a threat made that Jesus would not return as long as the Wam still clung to their old ways. But, otherwise, it was generally expected that Christ's return was certain, irrespective of whether the Wam had changed or not. The greater danger was that those people who still followed the old ways and behaved according to the codes of kastom would not be considered upon Christ's return and, therefore, would not receive the blessings of salvation.

The claim to equality implies necessarily that the present conditions are viewed and judged as being different and that, basically, a situation of inequality prevails. This inequality relates to various levels of the social universe. For one thing, the PNG villager, and in this case not only the followers of the NAC, feels that he is lagging far behind, and is at a grave disadvantage vis-à-vis other nations and peoples, such as Australians and Europeans. On a second level, and one which is felt more immediately, is the inequality within modern Papua New Guinea society itself. This, in the main, refers to the relationship between the rural areas and villages with all their perceived economic, social, and educational deficiencies, and the allegedly rich urban centres. Towns are used as a metaphor for the rich and powerful in PNG society, the so-called elite of the country. The cities are the places of the politicians, public servants, and businessmen with their supermarkets, banks, permanent houses, hospitals, and better educational institutions. What makes the disparity so immediate and meaningful is the outer or superficial similarity between those who enjoy these privileges and the villagers who are barred from them. Nominally, both parties are part of New Guinea society and they belong, vis-à-vis foreigners, to the same category of black New Guineans. However, the villagers perceive a deep rift between themselves and these others, and they see the two segments drifting apart and modern New Guinea society becoming increasingly stratified. Thus, for many villagers, inequality contradicts the postulates of independence and democracy as they were made to understand them.

The third level on which this inequality is felt is at the microlevel of the village. For the outside observer it is, at times, hard to pinpoint this disparity between individuals within the village, but for the NAC followers it is an undeniable reality. It becomes manifest in what they perceive as the endless accusations of "cargoism" against them, the public ridicule they are at times subjected to and, in the end, the frequent but latent threats of sorcery they feel exposed to, as well as the accusations of sorcery which are made against them. Behind all these discriminations they see the so-called "leaders" of the village, the councillor, the village magistrate and his clerk, the local MP, the church leaders of the CC, the leading bisnis men and other influential persons who, through their support of and contact with the representatives of the old order, such as the Catholic priest, the local kiap and other representatives of the public service, are seen to be in alliance with the outside

power establishment in Wewak and, ultimately, in Port Moresby. Especially the council system and the village courts stand for the old order, the "old contract".

Within the "new contract" all this is going to be changed. Here, the people are all the same and equal. Equality is based on the conviction that they, too, the simple New Guinea villagers, are the children of God, and not the offspring of spirits and mythical beings, as they have been told and made to believe in the past. It is only through the NAC that this deception has been revealed and the truth uncovered.

> "Before we were sick. Many of the leaders, and also the other churches, they looked down on us and treated us badly, and we walked around like menstruating women. ... . But now this is no longer possible, I tell you, now is the time. ... . Before, when we were sick, who was there to help us? But now we have enough bone [strength], but now we are strong enough. No matter whether he's a public servant or just some other stupid man, he is breaking the bloody law [when he insults us], he doesn't know anything about the history and the truth of the new order."[10]

The NAC is no longer prepared to accept the position it feels it is being pushed into by others. They are no longer willing to be subordinate to others and to be shunned, as men tend to avoid menstruating women. They are humans and men, not second-rate subjects. In order to underline this claim and express their equal status, the NAC preachers often ascribed to themselves and to the other members of the congregation a higher status position than they would be entitled to. They all become disciples, apostles or leaders. The idea of leadership and the term leader, which play such an important role on the village scene, are given a new meaning in the NAC sermons. For the NAC, the various present leaders are not legitimized to rule and govern over others, since their positions are based on a set of criteria which has its foundations in the old order. The authority of customary leaders, the tamberan bigmen, is nullified since it is founded on the fallacy of such tokens of kastom as yam, pigs, the ceremonial system and exchange feasts which were all instantiated through Gai's cardinal fault. The elected political leaders at village, provincial and national levels base their leadership positions on a system which developed out of, and as a consequence of, the cardinal mistake and which has the aim of keeping the simple villagers ignorant and subordinate. The same is true, of course, of the leaders of the Catholic Church within and outside the village. They, too, are henchmen of the old order. The only true leadership lies with the divine, and the only true leaders are God and Jesus Christ, whereas all humans are equal, no matter what label they carry.

> "In our country in these times, we can see how the spirit works, each one of us here tries to work at himself. I work with my spirit, and another works with his spirit. That is each man's choice. Yes, it is true, God created the leaders. God created whom? God created the Prime Minister? God created the councillor? God created the village magistrate? Yes, God created all these people, but God also created all the rest of us too. God didn't only create this group of leaders. So why do you allow yourself to be ruled by another man? You yourself are a leader, you are a leader of the village, a leader of the community."[11]

The claim that everybody is a leader – every man, woman and child is a leader, one man said during a service – carries the same significance as the statements "we are all apostles" or "we are Melanesian disciples". At which level of hierarchy the people place themselves is secondary, the relational aspect is more important. Among humans, there is no hierarchy, at least there should not be, and no distinction between leaders and led. There is only one category of people, the equal members of one single community. The use of the term leader also implies that each person is bestowed with a free will, self determination, and an equal portion of autonomy.

The key concept which interlinks and binds the four main themes of the sermon is that of the Holy Spirit. Unlike in some other religious movements, such as the revival movements of the SSEC in the Maprik District, or some new churches in the Highlands of PNG (cf. Kale 1985) where the Holy Spirit becomes manifest in the form of a kind of spirit possession (speaking in tongues, shaking of the body), the Holy Spirit in the NAC does not elicit any such ecstatic phenomena. It is more a spiritual essence which only becomes manifest in the manner in which persons conduct themselves. In the act of sealing – a rite peculiar to the NAC (2nd theme of the sermons) – an apostle places the seed of the Holy Spirit in each new convert. On the second coming (3rd theme), Christ will choose those individuals in whom he sees that the Holy Spirit has thrived and flourished. Each can offer proof of this by leading a righteous life, following the code of the "new contract" which not only entails regular church visits, prayers, and the Holy Communion, but also the abandonment of everything that is linked to tradition and kastom (1st theme) and the mode of behaviour it suggests (egoism, jealousy, conflict, violence). In Tok Pisin this is also expressed in the term of ol sain bilong dispela graun, the "signs of this earth".

> "We altogether, we 'holy houses' of God, have received this spirit of God, and we must take care of it and see to it that it grows inside each one of us. And remember, we must forget about all these bad thoughts we have. Drop them! We cannot go on pulling all these bad thoughts along with us. Away with them! We must think about letting this spirit of God grow inside each house, we cannot stick to our old customs and think that God's spirit will grow inside us. If we go on doing this, it will kill God's spirit inside us. Drop all these signs of this earth, and then we shall receive this good present God has been preparing for us."[12]

If the people heed these words, in the near future inequality will no longer prevail because personal ambitions and egoism will have become redundant. Achievement, respect and status will no longer be dependent on competition, and on creating and sustaining unequal relationships, as in the old order. Instead, inner conversion to a virtuous and sinless way of life will lead to a state of equality (4th theme) and affluence which, in the sermon extract, is implied by the notion of "the present of God".

A NAC WORKSHOP

I now go on to describe an event which took place early in 1988 and which was both typical and atypical for the NAC. Atypical, because it was the first time the NAC had staged such an event, but typical just because it was a novelty. It serves to show how

flexible and adaptive to new ideas the NAC is. The followers of the NAC were constantly on the search for new concepts, ideas or catchwords through which they hoped to confirm the verity of their belief, or otherwise provide further clues to the nature of the secret they were in search of, and which could then, if compatible in terms of signification, be woven into the ideology. The event to be described was called "seminar" or "workshop", in itself already a novelty. It was held one Sunday immediately after church service. The aim of the meeting was to explain and, at least nominally, discuss the concept of "Christian Development". The concept of development was a notion that was frequently discussed in public meetings of various kinds, but it was until then not one of the NAC specific catchwords like freedom movement or independence, which were constituent parts of the NAC doctrine.

Significantly, the NAC staged its own workshop a few days after the Catholic Church had held a seminar on the same subject for village and youth leaders of the area in Dreikikir. The meeting had also been attended by two of the NAC leaders, Lawrence Peimel and Henry Auinda. Given the resentment felt towards the CC by the NAC, and the accusations that it was the disseminator of a false Christianity, it appears rather contradictory that two of the NAC leaders should attend such a meeting. But there seemed to be no contradiction in this, mainly because it was stated that the meeting had been chaired by an independent person, in fact, a government official who worked for Bernard Narokobi. One must also consider that the NAC often believed that the CC was deliberately spreading warped information, and that if they took the negative information content of a CC statement, they would in actual fact be receiving the truth, or at least a further clue to the truth. Thus, at times, the CC was an important source of information.

The notion of Christian development forms part of the Catholic Church's development policy. It is not directed against other, more secular approaches to development, but rather seen to be complementary to them. It is believed that economic and social development must be based on a parallel, spiritual and moral development of the individual. The forum within which this is to be achieved is the notion of the "Christian community". In this idea of Christian development, the NAC leaders saw confirmation of their conviction that cash cropping and bisnis ventures, as they were being currently operated, were not the right way, and would not lead to salvation. Spiritual development was the key to success, and the fact that they were told this by a third party was regarded as an attestation that their belief in sealing, and in the importance of the holy spirit, was correct, and that when Christ returned he would bring development with him. This is *not* what they were told explicitly at the meeting in Dreikikir, but what they interpreted from what they believed to be one of those veiled messages they were accustomed to receiving from the encapsulating world, and it was their interpretation of things which they passed on to their congregation in Warengeme.

The meeting was built up on a question-answer pattern, which again was a complete novelty for the NAC. The members of the congregation were expected to give answers to questions put to them by Peimel and Henry, questions they were practically unable to answer, because they did not know what had been discussed at the original meeting. Thus,

the meeting had something indoctrinatory about it, which allowed Peimel and Henry to demonstrate their superior knowledge and thus underline their leadership position. For Peimel especially, the event served as a good opportunity to return to a more official leadership role after his involvement in a sorcery dispute a few months earlier. Since then he had been playing a more minor role on the official NAC stage, and leadership had been in the more temperate hands of Michael and Patrick.

In the course of the meeting, it became clear that the NAC leaders rejected the prevailing notion of development as it was widely understood. Trade-stores, cash cropping, and other business ventures were inefficient surrogates through which the people were allowed to earn a little money, but which would never lead to a state equal to that of other worlds, or even other segments of Papua New Guinean society. The same was true of governmental services such as health care, education, or road construction. Both private and public efforts were futile as long as the old order prevailed, and the New Guineans were kept away from the true source of power. Moreover, the current development concept was rejected just because it was being propagated by the government, the administration and, indirectly, also by the Catholic Church. It was cementing the present order and thus barring the way by which New Guinean villagers might ever reach an equal status. Below are three statements by NAC leaders on the notion of development:

> "We work hard at planting coffee and cacao, the same as the people on the Sepik who sell makau [a type of fish]; on the coast they sell copra. They tell us this will start development, so that we shall have a lot of money, or you will have many cars, or machines, or bridges or whatever. This isn't development! No, really not!"[13]
>
> "This development [meaning Christian development] doesn't mean money, or machines, or houses and the like, or schools, aid posts and such things, no, this development is meant for each one of us, each one of us must receive this development. We will know when we have received development, but in my opinion this aid post and these schools and such things, they don't help to develop each single family, no they really don't."[14]
>
> "Each and every man, you work hard at supporting this development [meaning Christian development] according to the will of God Father and his Son; they will give you this development because you yourself have stood fast, and remained strong, you've made these efforts all on your own. Development doesn't appear from nowhere. Today we can look at Warengeme and ask ourselves, is there any good development work here in Warengeme? I don't think so. There's no good development here, or is this road here what you call development? It's something, but it isn't development, because this kind of development is only public development, it's for all the people. But you yourself, each and every man must have his own development, it is through your own efforts that you will get this development. That is something I have been thinking about when I heard all these questions about Christian development. It is through the Holy Spirit that you will find this, your very own development."[15]

Two aspects stand out in these quotations. One is the apparent rejection of the material side to development, the second is the renunciation of collective benefits. Schools, roads,

or aid posts are not development, because they do not directly help each individual. Both statements are rather inconsistent with the general ideas of the millenarian doctrine of the movement, at least at first sight, because the vision of paradise entails precisely these two aspects: material affluence and community.

However, this renunciation of material benefits is not a rejection *per se*, but a critique of the way material benefits can be attained at the present. In order to produce even only marginal benefits, the villagers at the moment have to work hard at growing coffee or cacao, or have to earn an income with such hazardous enterprises as trade-stores, and have to be grateful and show gratitude when the government has a road mended or a bridge rebuilt. At the same time others – other nations, other people in Papua New Guinea – do not have these worries because they are in possession of the secret and live in affluence. But these same people tell the villagers that they have to work hard at business to attain a similar standard of living. Also, public development (services offered by the government) is futile. Education has not brought any ostensible change to the village, or to the parents that have sent their children to school. What good is a road when nobody in the village has a car to use on it? And what's the benefit of an aid post when the (salaried) aid post orderly is never there, there are no supplies in stock, and the people still die of sorcery? The statements above are not directed against the intrinsic value of material goods or collective benefits as such, but against the system through which these things have to be attained at present. Bisnis, coffee, and government are representations of the old order, and as long as the old order prevails, the people will not achieve true development.

True development, to the NAC leaders and their followers, should be individually rewarding. Everybody should profit from true development. Like independence, the notion of development was regarded as something concrete, and open to sensory perception; moreover, it approached something more like a state of existence. The notion of true development took on a different meaning for the NAC followers. It meant salvation and redemption. When they acquired the millennium or paradise, they would also be receiving development. Development was, in fact, synonymous with paradise. In the coming state of blissful affluence and equality, questions relating to distribution, collective or individual benefits or marginal returns would become redundant, because everybody would have all of everything.

True development demanded spiritual development, that was the essence of the notion of Christian development. Humans could not initiate development through bisnis and cash cropping, all they could do was to undergo inner conversion in order to be prepared for the radical transformation which would set in upon Christ's return.

> "Now the spirit, the Holy Spirit is at work in Papua New Guinea; it doesn't belong to the white man, I think I've told you before, do you remember, or have you already forgotten it again? It seems that you are not supporting this Christian development. So now we are finding it hard. I've told you before, pay no attention to anyone who wants to strengthen the village on his own. We shan't follow such a man. But which kind of spirit will you find to help to guide you, which spirit to guide us, the people of Papua New Guinea? Many of us have gone astray in these days. Now in these times, the spirit

of God is at work in Papua New Guinea, but many of us turn our backs on it, on this spirit that will guide us. You must work hard to get this spirit which God has prepared for us. But you don't, that's why many of you find it hard to answer all these questions."[16]

"Next week, Bernard [Narokobi] is leaving Moresby and going to Germany, but he is not going there to work and talk about material things, no he's going there to work on this spiritual development. So we here, we have to go ahead, we have to go ahead with this spiritual development. You know yourself, the development of each one of us, man and woman, is good development, it beats all other forms of development like roads, bridges, trade-stores, coconut plantations, coffee, cacao and the like, all things which take place outside the body of each one of us men and women. Development must first come up inside each one of us men and women, afterwards everything outside."[17]

The emphasis on inner conversion and a change of habits and behaviour is made clear in these two statements. This is a creed other Christian denominations would subscribe to as well, but for the NAC followers the consequences of such an inner conversion were expected to be of a different quality and had a different meaning. Salvation was imminent and it would be instantiated within the confines of lived experience, i.e. in the Wam area itself. It was not a notion that pertained either to some indefinite future era, or to a nontangible spiritual dimension. Towards the end of the meeting, Peimel made it clear to the congregation that this knowledge about the true nature of the concept of development they had just disseminated was not of human, but of divine origin. The link between the divine source and the NAC congregation was established through the man that had chaired the original meeting in Dreikikir.

"Alright, this man, who chaired this workshop or seminar, now works for Bernard Narokobi in his office in Waigani[18]. His name is William, William Nindi. This man has been to Bethlehem too, he's gone to Syria as well, Syria, who's place is that? Yes, it's God's place of origin. This man has been there. He went with Bernard, the two went there, saw everything, and then they came back. Why did Bernard and William go to Bethlehem and all the way to Syria, God's place of origin. You tell me! It's not difficult to answer. This paper we've just read to you, who wrote it? Did the Prime Minister write it? [Answer from the congregation: *God wrote it*] That's right, God wrote it. And why have we become Christians. Why did these two men go to Bethlehem, the place of before, the place of Christ's grave before? Did Jesus die? Did he die and banish us all to this country for good? No, he didn't die. Jesus is alive and he believes in his Father's name, he has received his Father's mark, and now he is waiting to come back. He will come back."[19]

The link to the divine source runs from the NAC congregation, through William Nindi and Bernard Narokobi, Bethlehem, and ultimately to Syria and God who, in logical consequence of this syllogistic chain of evidence, was the true source of the words spoken at the meeting.

From the last quotation it becomes evident that Bernard Narokobi is ascribed a status of pivotal significance. He is something like a prophetic figure. Next to the Chief Apostle and

the NAC, it is in him and the political party he represents, the Melanesian Alliance, that the followers of the movement place their highest hopes. To end this chapter, I briefly discuss the relationship between the NAC and the MA party.

Catchwords or slogans that are frequently used are terms centring on the two expressions "freedom" and "Melanesia". "Freedom" or, more specifically "freedom movement" is very often used as a synonym for "paradise" and the realm of the dead in Sorom, and the other "headquarters" in West Papua. It is through this connection that the OPM movement in Irian Jaya is ideologically tied up with the millenarian vision. The OPM is commonly termed "freedom movement", and its members are called "freedom fighters". However, the aims and ideals the OPM is striving and fighting for, the end of foreign, in this case Indonesian, rule, self determination, and independence for the indigenous population are interpreted as already accomplished reality. The OPM is called "freedom movement" because the people there *are* free, not because freedom is what they are fighting for. The Indonesians are trying to take freedom from them again. The fact that the PNG government is critical of the OPM and does not openly support it is regarded by the NAC followers as clear evidence that something is in existence in West Papua that the ruling PNG elite would like to hinder from spreading to Papua New Guinea, namely freedom for the oppressed population. The "freedom fighters" refer to the Wam ancestors in Sorom, and what they have attained for themselves there, freedom and affluence, is expected and awaited upon the arrival of the millennium here.

The connection between the OPM and millenarian movements in the Sepik has historical roots. Both Camp (1983:87) and Gesch (1985:108) refer to the influence which the reports of the existence and operations of the OPM had on the people of the Yangoru area in the wake of the Peli movement in the seventies. In the Wam area, certainly, this connection has been kept very much alive, partly also due to the long-term residence of a refugee from Irian Jaya in one of the villages of the area. This amalgam of ideas centring on the notion of the "freedom movement" is further linked to the concept of "Melanesia" and "Melanesian people", two further such catchwords. The NAC followers see the "freedom movement" as being carried by people of the same colour of skin and the same cultural background as themselves, and whose struggle is related to the cause of the unified Melanesian people.

The idea of a common cause of all Melanesian people does not necessarily imply any notion of racial resentment. Like its predecessors, the NAC movement is not so much anti-white as pro-black. After all, the New Apostolic Church originally is a "white" church, as are the apostles that visit Papua New Guinea and so is the Chief Apostle. Since the demarcation line between the "haves" and the "have-nots" no longer follows the colour boundary, but is located between a rich urban ruling class (with its exponents in the rural areas as well), emulating a life-style which is reminiscent of the earlier colonial rulers, and the overall class of poor villagers in the rural areas, the concept of "Melanesian people" does not stand for a colour category, but more for an incipient, growing social class. The notion of a common cause of a united "Melanesian people" is activated and carried over into the political sphere through the NAC's support of, and adherence to, the Melanesian

Alliance Party, which is looked upon as a true people's party and one that takes sides for the underprivileged rural population.

> "This party of ours [i.e. the MA] was not founded only recently, but some time ago, but we people here in the bush did not hear about it then. We heard about it in the 1982 campaign, and now everyone of us, man, woman, and child understands the name of the party [knows what it stands for], and we are in full support of it. They came and explained to us and all the fathers and mothers that the Melanesian is not just any old person, and that the party is not a party of the whites or some suchlike people, but that it is the party of us black skins. We are all Melanesians, we are Melanesian people, together with those of West Papua, together we are all Melanesians."[20]

The followers of the NAC regard the MA party as the secular branch of their church. What the NAC will achieve on the spiritual level will be put into effect in the political sphere by the MA. The return of Christ will be in concert with the rise to power of the MA and the instatement of Bernard Narokobi as Prime Minister. The aspirations and hopes the New Apostolics place in the MA party are not so much based on the party as a whole, but rather on one of its leading figures, namely Bernard Narokobi. Although Narokobi, to the best of my knowledge, is not, or at least no longer actively involved in the NAC, he is regarded by its followers as a figure of almost prophetic dimension. On the secular level he holds a position that is equivalent to that of the Chief Apostle on the spiritual level. His reputation and status as one of the principal leaders of the movement, and as a pillar of hope, has several roots.

Firstly, being a native of Dagua, which is on the coast between Wewak and Aitape, he is reckoned by many of the people as being "one of us". He's from the nambis bilong yumi, our coast, they say, to which many Wam can trace kin and trade relations from the earlier days.[21] Secondly, his grassroots approach to politics, especially in the earlier days of his political career, appeals greatly to the people (and not only to the followers of the NAC). He is regarded as a man of the people who has not been corrupted during his involvement in government politics, and the villagers can relate more easily to his sometimes more populist views concerning the "Melanesian way" (cf. Narokobi 1980). He is also well known for his counselling and his work as a lawyer, in which he is known to have often represented the interests of simple villagers. Thirdly, he also has historical connections to the old Peli movement from the time of the 1982 national elections when he and "... the Melanesian Alliance Party attempted to make a wide ranging alliance with Peli and the New Apostolic Church on the basis of an appeal to similar grass roots origins. Various politico-religious meetings were held on this in Malimbanja and throughout the East Sepik, but they had little effect on the runaway lead of Michael Somare at the polls" (Gesch 1985:114).

Just as Michael Somare is considered the personification of the legacy of colonial rule and foreign involvement, Bernard Narokobi is treated as the embodiment of the true New Guinean or Melanesian. Among the Wam, at least, many rumours surround his figure, and there are also many stories told about mythical contests he has with Michael Somare, all of which, naturally, end in his favour. His charisma also stems from the belief that he has

travelled to all the countries of the world and, most importantly, that he has been to Bethlehem and to Syria, which by many NAC followers is regarded as the true as ples, the place of origin, of God. The identification of Syria as God's place of origin is another indicator of the NAC followers' method of digging the truth out of the negative of a proposition. Syria is a name which appears in the Bible frequently, but it is not necessarily ever described in detail, nor does it appear to play the same central role as other biblical locales do. It remains, thus, rather an opaque and mystical name. For the Catholics and other churches as well, Judaea is the "holy land". But this has been identified by the New Apostolics as one of the deceptions offered to them by the representatives of the old order, and they have thus concluded that there must be another place, also in the Bible, that is of more potent, but hidden, significance. Why specifically Syria has been chosen I do not know, nor do I know whether this concept is peculiar to the Wam, or whether it is encountered in other areas as well. But for the Wam New Apostolics, certainly, Syria is identified as God's true place of origin.

The use of the term "Melanesia" in its various shadings (prophets, disciples, people, apostles) serves as a catalyst through which the NAC followers are able to create links of meaning in an inferential chain of ideas between the secret of creative power, vested in the bones of Yelebiel, the ancestors, the realm of the dead in Sorom, the "freedom fighters" in West Papua, the unified Melanesian cause, the Melanesian Alliance Party, the New Apostolic Church, and, ultimately, God and Jesus Christ, the source of all creation.

A SHORT SUMMARY AND ANALYSIS

Between the earlier Peli and the present NAC movement there is a certain degree of continuity, and one could say that the NAC filled the vacuum which the end of the Peli movement created. Not only did the NAC, when it came to PNG, first set foot in the Yangoru area, the former stronghold of the Peli movement, but in Warengeme we also find that the same segments of the village that joined the Peli movement previously, today constitute the main following of the NAC. In the people's expectations, the NAC came to fulfil what the earlier Peli movement had started but failed to achieve.

However, there are differences as well. Whereas Peli was an indigenous response to late colonial rule, the NAC's resentment is directed towards the post-colonial establishment. Furthermore, the NAC today presents itself, frontstage at least, as a church on an equivalent standing with the other denominations operating in the area. But there are more fundamental differences too. Whereas both movements represent indigenous attempts to attain recognition and equivalence with an encapsulating society in a rapid process of development and change, and seek participation in what they perceive as outside affluence and wealth, they differ in terms of the strategy they employ to effect transformation. Peli and NAC represent two different types of politico-religious movements. Whereas Peli was a manipulative movement and displayed strong thaumaturgical characteristics, the NAC, in contrast, could be described as a conversionist movement (Wilson 1975: 22, 24).

What this means is that whereas the Peli followers, centred on the prophetic figure of Mathias Yaliwan, still believed that they could change or, at least, influence the course of events in the world through performing the proper rituals and initiating action, such as the removal of the stone markers on Mount Turu, or the felling of the old tree in Mehet, none of these aspects are encountered in the NAC movement. The followers of the NAC do not believe that through their action they can influence or alter the course of coming events. They can only adapt to the prerequisites of a future existence, not by trying to establish control over external processes, as was still the case in the Peli movement, but by effecting transformation within their own society, and by adopting a new cultural form, and becoming new moral beings. The return of Christ, to them, is certain and imminent, and with his return a state of eternal affluence, bliss and equality will commence. The critical question is whether the Wam by then will have been able to shed the shackles of kastom and adopt a new form of social and cultural existence, komuniti, where competition, conflict and hierarchy have been replaced by respect, brotherly love and true equality.

In its ideological dimension, the NAC has many elements in common with earlier millenarian movements. We have a millenarian myth, which recounts how the opportunity to possess omnipotence and a society in which equality prevailed was forfeited by the Wam's decision, that is Gai's decision to prefer adoption of the prevailing cultural pattern and indulge in the tamberan, a cultural order that, it becomes evident, is incompatible with equality and affluence. The tamberan kills Yelebiel when she goes to Mehet, and immediately afterwards antagonism and hierarchy set in when Gai begins to dominate and coerce his younger brother, Apel. At this stage the chance to retain the golden era of equality and affluence is lost.

Other features held in common with earlier movements concern the notion of the ancestors residing in some unreachable location, where they are producing an unending flow of wealth, but which is being diverted by outside powers. There is also the idea that an alliance of oppressors exists who have access to wealth and affluence themselves but who are keeping it away from the Wam.

An important point to note is the notion that the other, omnipotent, worlds are not innately superior to the Wam. They are not intrinsically better human beings, nor have they reached their present state of development because they possess superior knowledge or abilities. The present order of the world is the result of a chain of coincidences. Firstly, if Gai had heeded Apel's advice, the Wam would still be in possession of the creative power and thus be equal with, if not even ahead of, the other worlds. Secondly, Yelebiel's bones, containing the creative power, were found by outsiders by chance and carried away. Thus, the outside powers contributed nothing of their own to their advanced state, they are merely tapping power to which the Wam have a legitimate and still valid claim. Consequently, they should be prepared to share their power with the Wam.

The blame for the present pattern of the distribution of power is divided and differentiated. Primarily, the Wam have themselves to blame, because they chose the wrong cultural option and, since then, have been engaged in a cultural system that fosters competition, jealousy and conflict, and which prevents the Wam from gaining access to

affluence and equality. To remedy the situation and to return to a state of existence like that enjoyed when Yelebiel was still present, they have to rid themselves of the cultural order they were introduced to by Gai; that is, they have to part with all aspects of kastom in their manifest form (tamberan, exchange feasts, sorcery) but also with the cultural dispositions on which kastom is based – competition, the quest for status and prestige, and innate antagonism. The cultural order that prevailed in Yelebiel's times is identical with, or at least approximates to, the tenets of the Christian ethos. This in turn is compatible with that notion of the millenarian ideology that claims that God created the world in New Guinea, an idea the NAC followers derive from the interpretation of the world map they were given on the occasion of apostle Kumasi's visit to the village.

The Wam, it is inferred, could have attained change by now, were it not for the adverse forces that are keeping them in a state of ignorance and destitution by leading them on to false paths of development, and feeding them with warped information and surrogate concepts. Here, resentment is strongest against those segments of the opposing alliance which they feel closely related to and used to place trust in. For one thing, these are other, black, Papua New Guineans, mainly politicians, like Michael Somare and his Pangu Party, and public servants, who professed they would bring independence, development, and prosperity to the country but who, in reality, had secretly joined the oppressors and were contributing to the sustainment of the relations of inequality. For another, it refers to the Catholic Church, which, over many years, made the Wam believe they were being given the truth about the world and the key to salvation but which, in actual fact, was feeding them with falsities and leading them astray.

Subsequently, the task of implementing change is divided. The villagers themselves hope to initiate change through inner conversion, transformation. They are in the process of consciously discarding the habitus of tradition, kastom, and of becoming new cultural beings by establishing a new form of society, komuniti, but they reject any form of intervention on their part in the course of the events in the world. This became apparent when, for instance, the NAC leaders in Warengeme condemned the attempt by some Selni villagers to produce money which displayed the portray of Mathias Yaliwan. To them this was wok kago ("cargo" behaviour). The task of effecting change in the outer world is externalized and placed in the hands of agents, over which the NAC followers in the village have no control or influence, and, it must be said, who themselves have no knowledge of the role they are being assigned by the villagers, or at least, attach no value to the expectations that are placed in them: the official New Apostolic Church, and the Melanesian Alliance Party with Bernard Narokobi. When, and whether at all, the Chief Apostle plans to visit Papua New Guinea is beyond the Wam's range of influence and decision; the same refers to the political career of Bernard Narokobi and the fate of the MA party.

This division of responsibilities runs parallel to the previously mentioned division of blame. The villagers carry the responsibility for the cardinal fault of forfeiting the creative power in mythical times and, in order to bring about salvation, they have to undo Gai's mistake. Their external allies, on the other hand, are given the task of weakening and

breaking up the alliance which consists of the Catholic Church the indigenous new elite in Papua New Guinea, together with the Australians and Indonesians, all of them holding the Wam in a vice of ignorance and backwardness. This dual allocation of responsibilities also serves as an unintended safeguard against the failure of the movement's expectations to be fulfilled and against the frustration resulting therefrom, in the sense that it caters for explanations whatever the future holds for them. As long as the Chief Apostle does not visit Papua New Guinea and/or Narokobi is not elected Prime Minister, no drastic changes can be expected and the movement's leaders do not have to account for the accuracy of their prophecies. They are not the actors responsible for cataclysmic change, as, for instance, was still the case with Mathias Yaliwan and Daniel Hauwina during the Peli movement. Should, on the other hand, the heralded events occur, and the great changes still do not set in, then the leaders would be able to explain the nonfulfilment by stating that at heart the Wam still had not changed and that kastom was still prevalent and that they, therefore, had not been considered by God and granted his salvation.

NOTES:

[1] Mahaite Salmbehe's death caused a lot of unrest at the time and led to one of the large sorcery disputes typical of Warengeme. His death was interpreted as an attack against the NAC as a whole by its opponents in the village.

[2] The sermon was recorded on tape during the service. I have tried to reproduce a near-to-verbatim translation.

[3] Deacon Mathew Melange.

[4] Priest Michael Mahate.

[5] Priest Lawrence Peimel.

[6] Priest Lawrence Peimel.

[7] The term *marme tuhalmbe* literally means "earthen pot". It is a metaphor used frequently in land disputes to designate the absolute truth and incontestable claim of a person in relation to a piece of land. When someone "brings out the earthen pot", it means that he has won the day and that his claim is inviolable.

[8] Priest Lawrence Peimel.

[9] Priest Michael Mahate.

[10] Priest Lawrence Peiml.

[11] Deacon Patrick Sali.

[12] Deacon Henry Auinda.

[13] Priest Lawrence Peimel.

[14] Deacon Henry Auinda.

[15] Deacon Patrick Sali.

[16] Priest Michael Mahate.

[17] Deacon Henry Auinda.

[18] Waigani is the government district in Port Moresby.

[19] Priest Lawrence Peimel.

[20] Priest Lawrence Peimel.

[21] For instance, members of the Bunoho lineage (R) of Wohimbil can trace matrilateral kin links as far as the islands of Tarawei and Wallis.

SECTION FIVE
THE BISNIS MOVEMENT

This section is dedicated to the description of the Bisnis movement, the second change movement next to the millenarian form. Although the term bisnis primarily denotes such issues as cash cropping and earning money, economic transactions are only one aspect of the movement. It also has a very political dimension. Here I deal with the interplay between modern forms of economic organization and the strategies of modern bigmen. It will become evident that although the outer form is modern, the content bears very strong traditional features. The section is divided into four chapters (18-21).

In the first chapter (18) I describe the development of the various forms of economic collective enterprise which have evolved in Warengeme 2 over the last twenty to thirty years. I distinguish between five such forms, starting with the small joint enterprises, going on to the core group, then the bisnis group, the youth group and, finally, the large-scale Miyeme Development Corporation (MDC) which was founded in 1988. None of the enterprises have been blessed with real success in economic terms. The only enterprise that has displayed any durability is the core group Tilli Brothers, or Tilli Bros as it is usually called.

Officially Tilli Bros ranks as an economic enterprise as well. Although it is engaged in economic activities it also displays a second dimension and follows different aims. It functions as a political support group, or faction, for its two central figures, Alex and Gerry Anisi, in their attempt to set themselves up as the coming men of influence in the village. Although it too is superficially designed on a Western-style organizational model it draws its strength and resilience from more traditional social mechanisms. Here a very traditional pattern becomes evident in the sense that the ongoing sibling rivalry within the group is offset by the integrative properties of the cross relatives, who also belong to the enterprise. Tilli Bros is the subject of the second chapter (19).

The development of the Bisnis movement is closely interlinked with the careers of Alex and his brother Gerry Anisi. Shortly after he returned to the village from the Highlands, Alex founded Wotal Youth Group, which became the major collective enterprise during the time of fieldwork. It was the active branch of the laminated Bisnis movement. The third chapter (20) offers a description of the organization and activities of Wotal, and offers suggestions as to why Wotal was not able to sustain its high rate of activities over a longer period of time.

Like Tilli Bros, Wotal served both an economic and a political function, and its fate is intricately linked to Alex's progress on the political stage in the village. This interaction between a bigman on the rise and his faction is the topic of the fourth chapter (21). It reached its climax with Alex's win in the provincial elections and his nomination as the provincial Minister of Education, and the breakdown of Wotal shortly afterwards. It was followed by the emergence of the next, larger, enterprise: the Miyeme Development Corporation. The MDC is no longer a village-based group but an enterprise which spans a wider area and includes several villages in the neighbourhood.

CHAPTER EIGHTEEN

THE GROWTH OF COLLECTIVE ENTERPRISE

Bisnis in Warengeme is organized and conducted on two different levels: either individually or on a collective basis. In individual enterprise an undertaking is centred on one person, who is very often the head of the household. In cooperation with the other members of the household he provides and has control over the basic resources, makes decisions concerning the allocation of these resources, carries the main responsibility, and controls the revenue and its distribution. Through cash cropping the majority of adult males, and a small number of adult females as well, have become individual entrepreneurs. In terms of economic organization, bisnis ventures do not differ from traditional undertakings such as gardening and sago production. A large portion of the labour is provided by the household members or close kin and, very often, neighbours and friends lend each other a hand on a reciprocal basis, especially in labour-intensive phases such as at the time of picking and processing coffee. Apart from cash cropping we encounter individual enterprise also in the field of trade-stores, the trucking business, coffee buying or, as in one case in the village, in work as a seamstress.

Collective enterprise, on the other hand, involves at least two people, usually it includes a whole group of individuals. Basic resources are pooled, either equally or on a complementary basis. Furthermore, decisions concerning the implementation of an idea or a project are made jointly, at least ostensibly, as are decisions relating to the control and distribution of revenue. The villagers are aware that to enable them to create a substantial increase in income, and consequently in the material standard of living, it would need large-scale capital investment, or efficient collective business organization, or preferably both. The average New Guinea villager has little chance of gaining access to capital through one of the commercial banks on his own. Moreover, government agencies and funds do not support individual enterprise. Governmental funding programmes are destined for village cooperatives, bisnis groups and, in recent years, for youth groups. Although a number of bureaucratic hurdles exist, which often discourages groups from applying for support from such institutions as the National Youth Movement Program (NYMP), there is a better chance of receiving credit, and on better conditions, than from a commercial bank, given that the group in question displays a certain degree of probity and permanence, is based on sound business principles according to Western standards, and that it has a concrete project in mind, and not only vague ideas of doing business.

One must bear in mind that collective enterprise – best reflected in the current concept of kampani (company) – appears as the model upon which Western business success and affluence is based. The capacity to organize themselves and undertake collective action was one aspect which often made the colonial rulers appear superior to New Guineans. The Tok Pisin term for pooling resources and labour, and for generally undertaking things together, significantly is wok kampani. Also the missions, which represented one part of the encapsulating system and which were closest to the village scene, actively promoted, and still do, the idea of collective enterprise and group ventures, not only because it is an

efficient way of achieving results, but also because it reflects the Christian ideals of cooperation and togetherness. Collective enterprise is seen as one important way of attaining komuniti.

Collective enterprise offers other advantages as well. Firstly, it promises, although not necessarily ensures, a better input/output ratio. But I often had the feeling that expectations for collective enterprise had two sides to them. Whereas the input side (labour, energy, time, capital) was collectivized, that is, the people had the notion that individually they would have to put in less work and energy, the output side was individualized, that is, it was overlooked that the revenues from collective enterprise would have to be shared between the members, or remain as assets belonging to the group collectively. Secondly, it reduced the degree of personal responsibility. Whereas the people could safely expect to share in the benefits of collective enterprise, they did not, at the same time, have to worry that they individually would be called to account should the enterprise run into trouble, or fold up completely, at some stage. Thirdly, and this is probably the most important aspect, collective enterprise, although promising success and benefits, did not give rise to personal jealousy and animosity, with the result that the liability of being threatened with sorcery in the event of success was not so high, at least not for the average rank-and-file member.

Over the last few decades, Warengeme has experienced the emergence and rise of a number of forms of collective enterprise, ranging from the jointly-owned, humble trade-store to the lately founded large-scale, inter-village development corporation. The state of village development has been, and still is, often seen and measured in the light of the proliferation of collective enterprise, and the attainment of economic development is always seen to be linked to the success or failure of the various village groups or associations. Successful villages are often portrayed as those villages that possess successful bisnis groups, similar to traditional times when strong wards were portrayed as being those which were capable of staging magnificent tamberan feasts. In the present treatise, I distinguish between five such forms of collective enterprise: joint enterprise, core group, bisnis group, youth group, and development corporation. The distinctive criteria are both structural (group size, composition, organizational structure) and chronological (historical development over the last two decades).

By joint enterprise I understand an undertaking where two or three people pool their resources and start a business venture. The most common form of such a joint enterprise is a trade-store but this need not exclusively be so. In the past there have also been other forms of business venture run on a joint basis. Core groups in Tok Pisin are often called famili grup. The term indicates a kin-based group which, to a certain degree, is fitting. But it would be misleading to think of such a group as being defined by lineage membership. The ties between members of a core group are not necessarily agnatic, they include relations to cross kin as well. The proximity and quality of the existing relations is more important than the categories of kin from which the group is composed. Bisnis groups are not primarily kin-based groups. Instead, recruitment is based on ward membership by filiation, ritual affiliation, or marital ties to one of the wards in question. The term bisnis group is rather ambiguous since, in a way, it fits all forms of collective enterprise. They are

all "groups that do business". In the following I shall primarily be dealing with one bisnis group in the stricter sense of the term, the Warengeme 2 Bisnis Group (WBG). I shall use capital letters when referring to that specific group, and shall use bisnis group in its more generic sense.

The fourth category I deal with are the youth groups. Here, again, recruitment is based on ward membership or affiliation. By definition, youth groups are composed of the more junior segments of the village but, as we shall see later, this is only partly true. The youth groups are often described as being the junior partners of the bisnis groups. Contrary to other forms of collective enterprise, the youth groups formally also include female members. Whereas in the core and bisnis groups females are not specifically listed as members – instead their membership is taken for granted, due to their relative status as wife, sister or daughter of a male group member – women officially figure on the membership list of the youth groups, and have their own representatives in the governing body of their specific group.

The fifth category refers to the development corporation that was founded in 1988, on the initiative of a few Warengeme men. It is called the Miyeme Development Corporation (MDC) and is an attempt to form a specifically Wam-based cooperative society through which, ideally, in the future all Wam villages will be able to conduct the marketing of their cash crops. Membership in the MDC is not open to individuals, but only to business organizations of the area. In this sense the development corporation differs from the other four categories. I have listed it here all the same because, firstly, it represents a form of collective enterprise and, secondly, because in its political dimension it is closely linked to, and shares much in common with, the other forms of business enterprise operating in the village, specifically in Warengeme 2.

Starting at the bottom with the joint enterprises, the five forms of collective enterprise grow in size as we proceed through the list. Common to all categories, except the joint enterprises, is the existence of a modern Western-style board of management structure, within which a number of elected functionaries such as the chairman, secretary, vice-chairman and treasurer preside over the rank-and-file members of the organization. On formal terms, at least, we notice that a distinction is made between a group of leading figures and the base members. How effectively this organization functions is another question, but it is very important to note that the people themselves place great emphasis on the fact that their modern business organizations contain no elements of traditional organization. Their enterprises are modern organizations and, in their view, comparable to Western forms of business organization.

Membership is dependent on some form of financial contribution to the enterprise, again with the exception of the joint form. Members are expected to pay a membership fee, or what is often described as "shares". They become shareholders in the venture, and the contributions made form the group's capital stock. In general, the membership fee is uniform and paid only once. It is an admission, and not an annual, fee. It is only in the youth groups, specifically in Wotal Youth Group, that different grades of membership fees

exist according to the relative status of the various members. I shall return to this point later when I deal with Wotal YG at greater length.

In this brief synopsis I have not yet considered the question of chronological development. It is highly significant for the nature of collective enterprise that the five forms, although partly co-existing today, came to life consecutively over the last two decades (cf. diagram 13 below). Following individual enterprise, the first form of collective enterprise to emerge was that of joint ventures around 1970. From the merging of two joint ventures, the first core group came into existence a few years later. In the mid to late seventies the first bisnis group was founded in Warengeme 2, comprising more members, and from a wider range of recruitment, than the preceding core group. The bisnis group was followed in 1983 by the first youth group (YG), and in 1988 the Miyeme Development Corporation (MDC) was founded. The decisive point here is to note that the unfolding of the various forms of collective enterprise did not take place in neat consecutive steps. Straightforward linear development, from one form to the next, took place only from the joint enterprises to the core group level, otherwise the process is marked by a trait which we could call expansion and contraction.

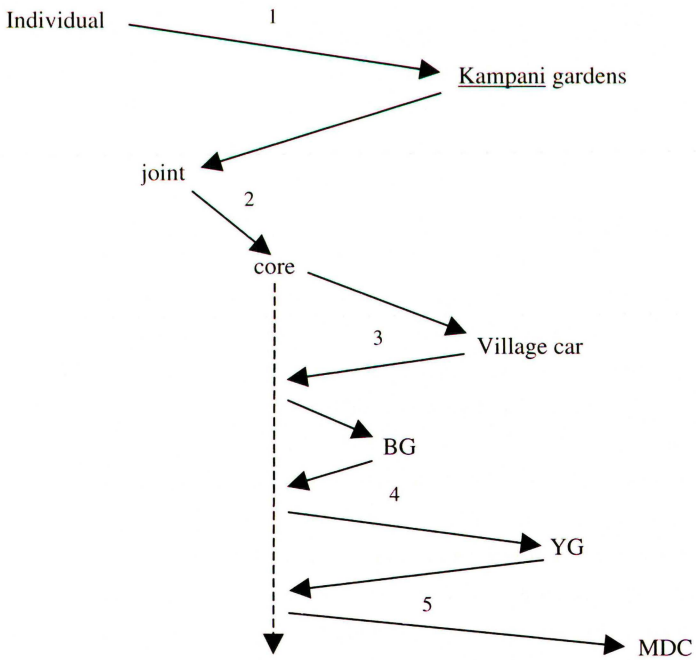

Diagram 13: Development of collective enterprise in Warengeme

What I mean by this is that each step from one entrepreneurial form to the next – with the exception of step 2 – is characterized by the disintegration, or the dysfunction, of the previous entrepreneurial form. In steps one and three, it refers to larger, intermediate enterprises that sprang up and then failed after a very short time; in more recent times, i.e. steps four and five, it refers to the dysfunctioning of the existing form and the foundation of a larger new form on top of the old one, whereby the previous forms, on paper at least, remain extant but are in practice no longer operative.

Step 1: When people in the area began growing coffee, the gardens were, as a rule, established on an individual basis. Possibly through encouragement by the administration, but certainly upon prompting by people like Wangu Wangu, the people began shortly afterwards laying out communal gardens, so called kampani gardens, which were owned and worked collectively. How many of these gardens existed, how big they were, and how many people approximately shared such a garden was difficult to elicit but it appears that they were quite extensive and were operated at ward level. However, they were not long-lived, and the scheme folded up long before the trees were mature. The basic problem lay in the question of the provision of land, labour, and the key to the distribution of the expected revenues. There is no collectively-owned land in Warengeme, and the people apparently could not come to an agreement on how the landowners should be compensated for the collective use of land, and how the revenues should be shared. The people returned to their individually-owned coffee gardens (which of course had not been abandoned during the attempt to establish the collective gardens), and this is still the basic pattern today.

The first joint ventures sprang up in the early seventies. One such joint enterprise was a trade store (there already were trade stores in the village, owned by individuals). It was started by two men of Warengeme 2, called Saas and Selmbia, who stood in an immediate affinal relationship to each other and whom we encountered above in the context of the pattern of conflict between various kin categories (cf. 157 ff). Saas provided the necessary capital, Selmbia the land on which the store was built. The store, however, was a failure – there was too much selling on a credit basis – and shortly afterwards, Saas changed partnership and opened up a new trade store with one of his *pinandil*, i.e. ritual exchange partners.

A second joint venture was started by Gerry Anisi together with an affine of his. With the money they had earned as independent coffee buyers in the village, they organized a pati, with which they hoped to earn enough money to buy a second-hand car.

Step 2: Shortly after the first, they organized a second pati. Although moderate profits resulted from both events, they still did not have enough money to put their plans into effect. Gerry approached Saas with the suggestion that they join forces which, subsequently, they did. They named their group, the first core group, the Wohi Bisnis Group, after the principal masalai or bush spirit to which the leading figures were aligned. The group bought a second-hand car from a neighbouring village. Since the car was not in good working condition, they soon ran into trouble, after which they returned the car to its original owner and received their money back (which, it must be added, is unusual).

Step 3: A few months later, a meeting was held in the village at which all the wards of Warengeme were represented. It was decided to buy a car to which villagers of all four wards should contribute and which was to be operated as a collectively-owned village car. The vehicle cost six thousand Kina and it was given to John Embini of Wohimbil ward to run. This project, too, soon ran into problems, mainly because the various village factions involved could not come to an agreement as to who had the right to use the car and at what time. In addition, although everybody claimed the right to the use of the car, nobody was prepared to bear the costs of maintenance and repair, claiming that that was the responsibility of the holder and driver of the car. The people began demanding their money back and pulling out of the project. Thus, another village enterprise came to an end.

The car was taken over by the Wohi Bisnis Group for 1600 Kina, of which 1200 were paid in cash. Wohi group grew in size as new members from the wards of Wolhete and Talkeneme joined, attracted by the prospects of a car. The group remained centred around the two principal figures Saas and Gerry Anisi and, in spatial terms, around the hamlets of Tillenge-Ahambil and Enniki. The car, however, had an accident several months after the purchase, and it was left lying at the roadside beyond repair. New commercial activities were planned and the Wohi group was reorganized and renamed, and became the Warengeme 2 Bisnis Group (WBG). By that time, Gerry Anisi was working for the Sepik Producers' Coffee Association (SPCA) as a clerk at their centre in Hayfields near Maprik. Warengeme 2 Bisnis Group was composed of members from Wolhete and Talkeneme. Saas was elected as the chairman, a position he nominally still holds, and Gerry functioned as what was called the "overall manager". The WBG entered into two new fields of enterprise. It operated as a coffee buying agency in the village, and it started a new scheme called "komuniti wok" (community work). It became a registered member of the SPCA where it sold the coffee it bought from the group's members in the village. The profits earned from the sale of coffee did not flow back to the individual growers but remained in the group, forming its capital stock.

The komuniti wok was a labour hiring scheme. For a fixed fee of ten Kina per day, the WBG hired out its labour to interested contractors. Any type of work was accepted (cash cropping, house or road building, clearing bush, etc.), and assignments were accepted from both within and outside Warengeme. Initially the scheme was a success. It required no capital investment, and the labour supply was abundant. Within six months the Bisnis Group had earned 400 Kina through komuniti wok, which was deposited in a bank in Wewak. However, over a prolonged period of time, the group was unable to sustain activities at the high initial level. The komuniti wok scheme gradually faltered and came to an end in the following year. The Bisnis Group remained in existence, but merely in its function as a coffee buying agency. No serious attempts were made to reactivate the labour scheme, nor were any new projects launched. As a form of collective enterprise it thus virtually ceased to exist. The task of weighing and buying coffee from the village growers and reselling it to the visiting SPCA agents could be done by two or three men, and in no way did it demand any form of larger organization.

Step 4: During the following phase of inertia, a new business organization emerged, or to be more precise, an old form re-emerged on the scene. It was called Tilli Brothers, or Tilli Bros, and as the name implies, it originated in the hamlet of Tillenge-Ahambil. It was in fact the reactivated core group that previously had been called the Wohi Bisnis group and out of which the WBG had grown. Gerry Anisi, who was still employed at the SPCA but shortly later switched to the other big cooperative society in the province, the Lus Development Corporation (LDC), played only a subsidiary role in the founding of Tilli Bros. This time it was his two half-brothers, Andrew and Alex Anisi, who were the initiators. The members of Tilli Bros were recruited from residents from Tillenge-Ahambil and Enniki, and included a few other influential men, such as Saas, from adjacent hamlets in Warengeme 2. Although again set up with a modern organizational structure, i.e. a board of management and various functionaries, Tilli Bros was a group primarily constituted on the basis of social and spatial proximity. I shall be describing and analysing this group in more detail below. What is significant here is that, at this stage, the intermediate transition is no longer characterized by the founding of a collective enterprise larger than the precedent bisnis group, as in the previous steps (kampani gardens, village car project), but rather by a contraction to the core group level of organization. It is out of this core group that, then, the next collective and bigger enterprise that supersedes the previous bisnis group emerges.

Alex Anisi, who became one of the principal leaders of the Bisnis movement, and one of the most influential figures in the village as a whole, was employed as a teacher in a foreign province at the time, so that Andrew became the chairman of the new group. Tilli Bros entered into a new field of enterprise when it opened a second-hand clothes shop in the village. The clothes were ordered from Australia.

In the subsequent development, we can observe a habitual pattern of process. The activities of Tilli Bros attracted a growing number of villagers, mainly younger villagers, who later joined the enterprise by paying a membership fee and thus becoming "share"-holders. Tilli Bros grew into what became known as the Tilli Youth Group. Through careless mismanagement on the part of its chairman, the new youth group was disrupted and ceased to exist until it was restored again, and reformed, by Alex a few months later. This was in 1984. It received a new name and became known as the Wotal Youth Group. Wotal entered into a very active phase both on the economic side (mainly through the reactivated komuniti work scheme) and on the side of social events (mainly sports) but after six to eight months, again, the pace began to slacken. There followed a lengthy period of stagnation, interrupted by brief bursts of enthusiasm and activity. Wotal came to an end in 1986. It remained existent on paper but was factually nonoperative. A year later the youth group was briefly revived again but then finally broke apart in early 1988. During Wotal's life span both the Bisnis Group and Tilli Bros remained in existence, the WBG, however, only nominally. Tilli Bros, on the other hand, remained active and operated as a group within a group, so to speak, since all the members of Tilli Bros were at the same time active members of Wotal. In addition, a large number of Wotal members were also registered members of the WBG. We thus have a complex and laminated organization of

the Bisnis movement. When Wotal finally broke up in 1988 it fragmented into a number of separate, smaller units at the core group level. They all planned to start up their own business enterprises but, until the time of my departure from the field in mid-1988, none of them had gone into action.

Step 5: The only core group that remained active after the schismatic breakdown of Wotal was Tilli Bros in its original form. Again we have this contraction to the core group level, after the failure of a large-scale enterprise (in this case Wotal) and before the next, even larger and more ambitious, collective enterprise was founded. This next enterprise was the Miyeme Development Corporation (MDC). The MDC was planned to be a specifically Wam cooperative society which was destined to compete with, and replace, the two existing cooperative societies, the SPCA and the LDC in the field of coffee marketing. The man behind this new and ambitious scheme was Gerry Anisi, the founder of the early Wohi and Warengeme 2 Bisnis Groups. During the youth group phase, he had played an important but only secondary role on the scene, behind his brother Alex. In his new endeavour, Gerry was backed and actively supported by a number of members of Tilli Bros. They took over principal positions in the new organization.

The formation of continuously larger groups is indicative of the way the villagers attempt to initiate change and operationalize the idea of komuniti. There is the underlying conviction that the success of the venture is dependent on the size of the group. Ideally, the whole village should rally and form one, undivided, collective. However, for this to become reality, factional interests and rivalries and old resentments are too strong; they invariably surface after a while and bring down the different attempts. As the successive bodies increase in size, their organizational structures grow and become more elaborate. The last project on the list, the MDC, takes on the form of a veritable modern company, at least on paper. However, the modernistic frames are not capable of curtailing traditional contention, nor of sustaining the ventures. All in all, they are highly artificial constructs and remain incompatible with the socio-cultural habitus of the village. The people pay lip service but feel little commitment towards them as soon as problems emerge and setbacks arise. As active collectives they tend to fold up quickly again.

The only entity that shows any durability is the core group, specifically the organization called Tilli Bros. It, too, outwardly boasts a modern organizational veneer but, underneath, it relies on functional mechanisms which are more deeply embedded in cultural tradition: kinship, residence, *pinandil* ties, and relations through name bestowal. Frontstage, these foundations are not referred to as being the elements upon which Tilli Bros is based but, in effect, this basis is the key to the group's "success". Below I offer a more detailed description and analysis of Tilli Bros. The group serves as a good example of a modern village faction. Tilli Bros is an ambiguous group. It serves both as an economic and commercial enterprise and a political interest group. As such it displays characteristic factional features: it forms a bigman support group, it is strongly centred on leadership, its members are recruited on diverse principles – it is not a corporate group, but more a social network. At the same time, the internal relationship pattern is marked by mutual distrust and latent rivalry, notably more pronounced at the core of the group than

on its periphery. Specifically, I would like to show how two significant themes of the traditional Wam social design flow into, and become perceptible in, the superficially modern organization. The one refers to the issue of sibling rivalry and agnatic tension, the other to the mediating role of cross-kin ties. The threat of agnatic fission is kept in check by the strength of affinal and matrilateral fusion.

CHAPTER NINETEEN

THE TILLI BROS ENTERPRISE

In terms of size and membership, it is not easy to delineate Tilli Bros. There is no official membership list as in other collectives, such as Wotal YG. Nominally, only men belong to Tilli Bros. The inner circle, so to speak, of Tilli Bros, consists of twelve to fifteen men, nine of whom are residents of either Tillenge or Enniki. The others are spread over the village, but they all have strong kin ties, or historical links, to Tillenge. The majority of the members are married and have families, three of the elder members have grown-up children. Family members such as wives, sons, daughters, sisters and, occasionally, affines too, are reckoned as belonging to the group although they never contributed the membership fee. Thus, factually, Tilli Bros numbers about fifty to sixty members. Membership is not a priori restricted to a narrowly defined social or residential group, such as a lineage or a hamlet. Potentially, it is open to anyone who shows interest in joining and can, somehow, activate a link to one of the members of the inner circle.

Primarily, Tilli Bros is an economic and commercial enterprise. It has a leadership body, consisting of a number of functionaries: a chairman, a vice-chairman, a treasurer and a secretary. Meetings are held frequently but irregularly, during which issues concerning business plans, policies, and problems are presented and discussed, and where, at least formally, decisions are taken collectively.

Tilli Bros began operating in 1983. A small trade-store was opened in Tillenge – the only other store in the village was situated in Warengeme 1 – and stocked with goods which had been bought with money pooled by various members. Shortly afterwards, the group entered a new commercial field when it ordered a number of bales of second-hand clothes from Australia. Initially, the sales in the village were a success and it attracted a large number of people, mainly younger villagers from Warengeme 2, who joined the enterprise by paying a membership fee of five Kina and, thus, becoming shareholders. At this time, Andrew Anisi was the chairman. Tilli Bros proliferated and changed its name to Tilli Youth. It became the first youth group in the village.

Tilli Youth ran into trouble shortly after it had been founded. The problems, which quickly led to the group's disruption, were the result of gross financial mismanagement on the part of the chairman, who used the group's funds for his own purposes. Andrew tried to salvage matters by organizing a pati but the event proved a flop and left him in even heavier debt. Some of the more daring younger members who had joined the enterprise later, took things into their own hands and stole a number of items from the trade-store which they regarded as the reimbursement for the shares they owned in the business. This event put an end to things until Alex Anisi returned to the village for his Christmas holidays at the end of 1984.

Alex reactivated the original Tilli Bros group and, at the same time, founded a new youth group which came to be known as Wotal Youth Group. Alex then reopened the trade-store, which he gave to his wife to run, in the name of Tilli Bros. Andrew, who had caused the disruption in the first place, remained an active member in Tilli Bros but he was

replaced as chairman by Norbert Anisi.[1] Andrew was not called to account for his mistakes, nor was he ostracised or shunned, by the other members of the group. After Wotal Youth Group was founded, and during its entire life span, Tilli Bros remained in existence and played a central role within the Bisnis movement.

Tilli Bros kept up its commercial activities. Financially it was in a sound position. The main source of income was provided by the trade-store in Menitelme, a hamlet site just next to Tillenge, where Alex had a large new house built for himself by the members of Wotal Youth (see plates 19 and 20). The store was always well stocked and soon became the main store in the village. It also catered for many villagers from Warengeme 1, who often preferred this store to the one in their own village half because it was open all day, well stocked, and sold at slightly lower prices. This was possible because Tilli Bros usually purchased their goods from a wholesaler in Wewak, where the prices were slightly below those in Maprik. In addition, transport on most occasions could be provided free through the use of a LDC company car where Gerry Anisi was employed. The trade-store was self-supporting on the whole, and when it did face a financial bottleneck it could fall back on the salaries of Alex, and Gerry Anisi who increasingly became engaged in the enterprise. It could also rely on financial support from its closer members who were usually willing to provide help when needed, as on one occasion when, during the absence of Gerry and Alex, the store needed restocking but there was no cash on hand. Beside the trade-store, Tilli Bros also organized a number of second-hand clothes sales (see plate 22), and on various occasions it stepped in as a coffee buying agency in the wider Wam area, when the other coffee organizations were momentarily out of funds.

With very few exceptions, the members of Tilli Bros were all active members of Wotal Youth and, nominally, also of the Warengeme 2 Bisnis Group, which still existed officially. Even if it no longer undertook any collective activities, it remained an important organization because it was the agency through which the large majority of villagers of Warengeme 2, and increasingly also of Warengeme 1, sold their coffee.

Thus, between 1985 and 1988, the Bisnis movement in Warengeme 2 displayed a somewhat confusing pattern. It consisted of three structurally discrete organizations – Tilli Bros, Wotal Youth and the WBG – which, in terms of personnel and membership, however, were densely interwoven. The three organizations were discrete in the sense that, firstly, they were regarded by the villagers as being three separate groups, secondly, that each organization had a leadership body of its own consisting of a number of office-holding positions and, thirdly, and most important, that the three groups held their funds separate and had bank accounts of their own. This clear structural division was thrown out of balance by the interlinkage and overlap of the members and the leadership. With very few exceptions, the members of Tilli Bros were all members of Wotal YG, and these again, with other non-Tilli members of Wotal, all belonged to the Warengeme 2 Bisnis Group. We have, thus, a triple-layered Bisnis movement, in which the inner circle of Tilli Bros was securely situated on all three levels. Not only was the inner circle of Tilli Bros represented on all three levels in terms of membership but a large number of important leadership positions in Wotal Youth and the WBG were also being held by a small group

of men from Tilli Bros, at the core of which stood the two men Alex and Gerry Anisi. We can take it that Tilli Bros was more than merely a commercial or economic enterprise, and that there were other motives in play in the buildup of the Bisnis movement than just doing bisnis. In the main, these motives refer to the formation of an influential political support group and power basis around the central figures at the core of the movement. I shall return to this point and its implications in fuller detail later on. Now it is time to take a closer look at the social composition of Tilli Bros and the factors that shaped its existence and modus operandi.

THE LAYERS OF TILLI BROS

When I use the term "social network", I am not using it according to the strict standards of network analysis (Schweizer 1996; White and Schweizer 1998) but more in its metaphorical sense which, however, does not divest it of its analytical value. I shall apply the concept as J. C. Mitchell (1975:2) suggests, namely, "as a specific set of linkages among a defined set of persons with the additional property that the characteristics of those linkages as a whole may be used to interpret social behaviour of the persons involved." The defined set of persons and the characteristics of these linkages I shall be describing as I proceed.

Until now, I have loosely used the term inner circle to describe the dozen or so men that formed the nucleus of Tilli Bros. For the purpose of a closer examination, I shall alter my perspective and distinguish between three encompassing layers: the core, the effective network and the extended network. For the moment I shall restrict myself to the inner segment, i.e. the core and the effective network, and shall bring in the extended network later on. This inner segment of the nucleus consists of ten men. They are, according to my judgement and interpretation, the main figures in the setting. Four of these ten men, the key figures, I place in the core group, whereas the other six I designate as the effective network.

The core group is made up of four men who all go by the name of Anisi, after their "father" Anisi: Alex, Andrew, Gerry and Norbert. Within the core group we can make a further distinction on the basis of role, importance and initiative, between what I should like to call the heart of the core, represented by Gerry and Alex, and simply the core, which includes Andrew and Norbert. Whilst we could say that the core as a whole was the driving force behind Tilli Bros (and practically the whole Bisnis movement), it was Gerry and Alex who provided the ideas and the motivational essence.

Built around this potent core is the group of men who constitute the effective network. Complementary to the driving force, they form an important supportive group. Within this support group I again distinguish between two segments. One segment consisting of four men could be defined as the active support group, the other two, older men, play no important part in terms of business activity, but they are eminently important as a cohesive and integrative force. In organizational terms this differentiation between the various layers and segments naturally does not exist. I have applied it for analytical reasons so as

to bring order into my ethnographic data and to be able to display the pattern more effectively.

The most important, actually decisive, relationship for the existence of Tilli Bros was that between Alex and Gerry Anisi. For a description of the family background of Gerry and Alex, and the kin chart depicting how they are related to each other, I refer back to the chapter on Anisi's funeral (cf. diagram 12, p. 252). The fifth man who goes by the name of Anisi, Uhane Anisi, plays no immediate part in the Tilli Bros organization, although he is a close associate and ally of Gerry Anisi. Gerry and Alex are classificatory lineage brothers.

In addition to their joint upbringing, Gerry and Alex have a number of features in common and share similar attitudes on several issues of importance. They are both educated and have been employed in the wage economy sector outside the village for a number of years. After completing High School, Alex attended Teachers' College and then taught at a school near Mt. Hagen in the Highlands. After finishing his education, Gerry went to work as a clerk for the SPCA where he worked for several years before moving to the Lus Development Corporation.

Both men are married to women from outside the Wam area. Alex's wife, Baru, is from the Chimbu Province. They met in Teachers' College. Daina, Gerry's wife, is from the neighbouring village of Bolumita. A further common feature the two men shared was that during the period of fieldwork, both were in the process of "returning to the village", i.e. they were both planning on giving up their salaried jobs and settling down in the village again. In Alex's case this took place in consecutive steps. Early in 1985, Alex applied for a posting to a school within his home province, which he was granted. His wife and their young son came to live in the village, where Baru took over the position of running the Tilli Bros trade-store, whilst Alex went to teach at a school near Timbunke on the Sepik. Shortly afterwards, he received a further posting, this time to an outstation of the Tau Community School, south of Dreikikir, which brought him a little closer to Warengeme. He finally applied, and was granted, a teaching position in the Aresili CS, so that after 1986 he became a permanent resident in the village again. He taught at the local school until he gave up his profession for the sake of his political career in 1987.

Gerry, on his part, was employed and lived in Wewak, but he also had a house in Bolumita. When visiting Warengeme he stayed with his kinsfolk in Tillenge. Parallel to the growing idea of building up the Miyeme Development Corporation, he began building a modern, permanent house in Menitelme, the hamlet adjacent to Tillenge and next to where Alex had his new residence and the Tilli Bros store stood.

For both Alex and Gerry, village development in its most general sense was a pivotal issue. They both believed in bringing development to the village, each in his own way, and were genuinely concerned with the state of affairs in the village, and where Warengeme was heading in the near future. By the villagers, especially by those of Warengeme 2, they were regarded as innovators and change agents, and the people placed great hopes in them and their initiative. Their engagement was sincere and they not only believed that they were right in doing what they did, but were also aware of the expectations placed in them by the villagers. But, it would be misleading to imply that their motives were completely

altruistic. They both were equally interested in building up their power bases and were in quest of bigmanship.

This common orientation towards village development functioned as a very strong bond between them. It was in fact, together with the aspect of alliance in the face of opposition from various segments of the village, the most cogent unifying factor. Each of the two men had his own field of interest and influence. Whereas Gerry was more involved in the purely economic and commercial aspects of development, and promoted the collective enterprises in this sense, Alex was more politically oriented. He saw in the various layers of the Bisnis movement a reservoir of supporters for his political quest. From the beginning, Alex made no secret of his ambitions, which aimed at rallying political support in order to challenge the dominance of his opponents from Warengeme 1, to which the councillor, the local MP and the local SPCA director belonged in the field of village politics. However, the boundary between the two fields of interest was not clear cut, but flexible, and not infrequently one of them intruded into the sphere of the other, causing slight tremors of antagonism.

A further trait they showed in common was in their usage of language. At first sight this might appear as a minor issue, but given the weight and importance of performance in the public sphere, it is a highly significant factor. They both conversed almost exclusively in Tok Pisin. For Alex, Tok Pisin was the language of daily use with his wife and family, and his son actually spoke Tok Pisin before he mastered the Wam language, i.e. Tok Pisin had become a Creole language. Both Gerry and Alex still understood Wam but they seldom used it. In fact, Alex practically only reverted to it as a rhetorical device in meetings and disputes. When he spoke Wam, he spoke it slowly and very pronouncedly, quite unlike the normal Wam speaker. His Tok Pisin, too, was very modern and anglicized; he often used English phrases and, from time to time, even whole English sentences. One could even say, the more influential he became and the more he rose in position, the more modern his Tok Pisin became.

In spite of the characteristics and aims they shared in common, there existed a latent rivalry between the two brothers, which of course is not an uncommon trait between siblings among the Wam. This competition usually remained under the surface and did not erupt into open conflict, as was otherwise so often the case between siblings. Apart from the events surrounding the funeral of Anisi, I can recollect only two occasions where their rivalry became more pronounced and was marked by a clearly antagonistic flavour. Both instances relate to situations where one protagonist left his field of activity and threatened to encroach on the other's sphere of influence. One case involved the purchase of a car which was going cheap and which Alex was interested in buying. Gerry however forestalled the purchase by negotiating a sale to an outsider because, according to Alex, he suspected that Alex would become too involved in bisnis in the village, a domain which Gerry had clearly marked out for himself. The other instance refers to Wotal YG, which was clearly Alex's domain, and involved the plan to purchase a set of electrical instruments with which the youth group wanted to form a band and play at the frequent pati in the area. The idea was hatched by Gerry, who quickly found support in the YG chairman and

amongst some other influential members. Alex, who was not in favour of the project but, at the same time, was aware that the idea met with acceptance among the youth group members, did not openly intervene, but he tacitly boycotted the project and fostered scepticism and latent opposition towards the idea.

Although their commitment to the common cause of development and their work with the various collective enterprises brought them together frequently – when Alex visited Wewak, he always stayed at Gerry's house – they otherwise kept apart and entertained separate circles of associates, both within and outside the Bisnis movement. Given his field of activity, bisnis, Gerry was not so dependent on building up a large group of supporters or followers, or eager to pursue this aim. His attitude towards the members was more one of "take it or leave it". In contrast, Alex, in the field of politics, was very much more dependent on a large following and, therefore, on public appeal. The prospects he put forward were not so concrete or objectifiable, but rather promises, ideas, or visions of a better future, and of prosperity. The way people thought of him and the degree to which he could put over his ideas and convinced his potential supporters, was an important factor for the implementation of his plans and ambitions. Public performance, image management, and displays of leadership were, therefore, essential prerequisites, and it is not surprising that Alex was very much more sensitive to any notions of competition, either real or inferred.

Although he had been away for many years from the village during his youth and early adult life, Alex displayed many features of the traditional bigman: he was eloquent, witty, self-assertive, ever present in public, generous, and considerate for the worries and wishes of his fellow villagers. But, at the same time, he was demanding and selfish, and always in the process of negotiating, managing and manipulating his social ties and resources. Gerry, on the other hand, was a more quiet and reserved but efficient person, and the long years in an urban setting, and employment in a modern, commercial business venture, had clearly formed and influenced him. The differences between the two men, and their latent rivalry and contention was cushioned by three factors. Firstly, they realized that together they could effect and achieve more, especially in the face of opposition from other village segments and established village leaders. Secondly, they were principally engaged in separate, and complementary, fields of activity, bisnis and politics, to which, on the whole, they stuck, and thirdly, and very importantly, they were both woven into a dense network of social relations in and around Tilli Bros, which had a very moderating and balancing effect.

In this context of balance between the two leading figures, the third member of the core plays a significant role. This is Norbert Anisi. He is, actually, the only bearer of the name Anisi who has the full rights to it in traditional terms. Anisi is a name that originally belonged to Norbert's lineage, the *petule* line (line Y) of Warengeme ward. Norbert's father's father bestowed the name Anisi on the father of Alex and Andrew, thus entitling him to the use of the estate originally belonging to the ancestor of the name Anisi of the *petule* lineage. Alex's and Andrew's father, in turn, bestowed the name Anisi on Norbert, and it marks the return of the name to its lineage of origin. Norbert was adopted by Anisi

as a child and brought up together with Alex and the others. Nominally, members of the *petule* and Tillenge (line L) lineages stand in a cross relationship to each other. Norbert's classificatory fathers were Anisi's *meinheil*, and were addressed as *anheil* by the junior members of the Tillenge lineage. By classification, Norbert, therefore, was a *meinheil* to Alex and his brothers. But through their joint upbringing and their proximity in childhood and adolescence, the relationship had been redefined, and Norbert, Alex, Gerry and Andrew referred to and addressed each other as *nauwie*, i.e. brother, notably without making the distinction between *hurineme* (elder brother) and *somal* (younger brother). This reclassification is not merely a terminological switch; it reflects a very close and meaningful relationship between the people concerned. Norbert was on excellent terms with both Gerry and Alex, and the latter even described him as one of his most intimate associates and friends. Norbert's relationship to Andrew was more neutral.

In earlier years – Norbert at the time was in his late thirties – he had been a teacher and had, shortly before resigning from the profession, taught at the Aresili CS. His knowledge and experience made him widely accepted and appreciated in Warengeme. It was this combination of knowledge, experience, acceptance, and the proximity to the leading figures of the Bisnis movement which made him a central figure in the game. He held important positions on various levels of the movement (see plate 19).

This brings us to the fourth person in the core group, Andrew. If I described Norbert as the balancing factor in the setting, I would label Andrew the disruptive element. Andrew was Alex's natural *nauwie hurineme*, i.e. elder brother. He was married twice, but his first wife left him upon the arrival of the second woman. After schooling, he had worked for the SPCA in Wewak and Hayfields for a number of years, before returning to the village in 1983 (see plate 20).

Andrew found himself in a rather difficult position. He was senior in age and kin status to Alex and, within the family, only second to his father Anisi. When Anisi died, he took over many of the family's responsibilities, at least nominally, although his relationship with his father had been far from good. Anisi had accused him frequently of neglecting him in old age. In terms of social personality and influence, however, Andrew was clearly superseded by his younger brother, Alex. His relations with Alex were more than strained, and over recent years there had been a number of confrontations, and even blows, between the two men. This antagonism was rooted deeply in the complex of sibling rivalry, and in this case it was fostered by the conjunction of an adverse relationship between kin status and influence, by which I mean that we have a case where the younger brother was superior to his elder sibling in status and influence. What fuelled this rivalry, and made it so antagonistic, was the fact that Andrew, like Alex, was highly ambitious, had his own aspirations and was not content to play a subsidiary role whereas, at the same time, the channels for gaining access to spheres of influence were occupied by potent contenders, namely his *nauwie*. Andrew was a schemer, always in search of niches between Alex and Gerry in which he could assert himself. As such, he was not unlike his brothers, but whereas they were able to back their ideas by action, Andrew never went beyond the talking stage. His flair for schemes, unfortunately, was combined with an inclination to

dishonesty, as is shown by his misappropriation of the funds of Tilli Youth for his own ends, which led to the disruption of the forerunner of Wotal Youth. There were a number of other similar incidents which, all in all, gave Andrew a rather bad reputation in the village. He was labelled a maus wara (an empty talker), and many people did not trust him. Still, he remained an important figure in the setting. He too had his own, smaller, network of associates and friends. Amongst these was also one of Gerry's half-brothers, a so-called *krabei*[2], namely, the man called Maurice Natile who was to play an important role at a later stage of Wotal Youth Group (see plate 21).

In spite of the tensions that existed mainly between Alex and Andrew, and the open conflicts that erupted as a result, Andrew was never dropped or excluded from the stage of Tilli Bros, not even by Alex himself. Norbert usually remained officially neutral on occasions of conflict, whereas Gerry was often more inclined to support Andrew. Even on the day after the meeting that brought a final end to Wotal Youth, and which had ended in a verbal tirade by Alex against his elder brother (cf. pp. 416-420), I met Andrew on the veranda of his younger brother's house, discussing village issues with him and other members of Tilli Bros. When I mentioned to another man how astonished I was at Andrew's presence, he answered: "why not, he's Alex's brother!"

These four men I have tried to describe above make up the inner nucleus, or core, of Tilli Bros and can be described as the dynamic centre of the enterprise. Not only was the technical business know-how lodged within this group, but the initiative and motivation to start collective enterprise also emanated from this core. All four men were important in their own way for the functioning of the group. Given this, it is evident that the relations between the four men were of importance. As I have tried to show, the relations between the persons involved are complex, and fluctuate on a scale between antagonism and sympathy. In terms of sympathy and antagonism, the relationship pattern could be displayed as follows.

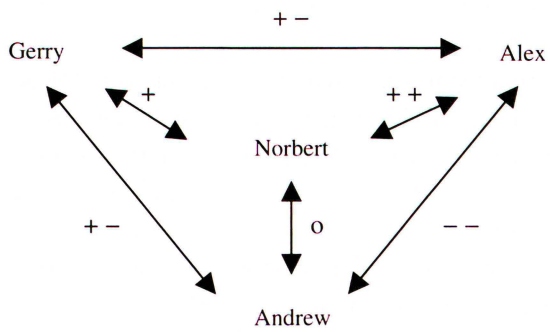

Diagram 14: Enmity and amity at the core of Tilli Bros

I am not an adherent of expressing social relations in quantitative terms, and if I do so here it is to sum up, and display at one glance, in what types of relation these four principal

figures stood to each other. The symbols, I believe are self-explaining: + for sympathetic, ++ for highly sympathetic, – for antagonistic, – – for highly antagonistic, and o for neutral.

A number of features are significant here. Firstly, considering that the core represents the hub of the collective enterprise, the presence of so many antagonistic relations is somewhat surprising. One would not expect that a group of people intent on building up and sustaining an organization could endure such relations. It is also noteworthy that the outer ring in the diagram, which consists of agnatic relations, is predominantly antagonistic, whereas the spokes radiating from the centre of the graph, and which are only fictively agnatic, are sympathetic. Looking at Andrew's relations to the other members of the core, one could speculate whether they would not fare better without him. But I think the matter is more complex, and that Andrew unconsciously fulfilled an important function in the setting, namely that of a "lightning conductor" through which tensions mainly between Alex and Gerry could be ventilated and could find an outlet. This became apparent when dissatisfaction or frustration over the failure of a project, or even a minor issue, was ventilated via Andrew and he was blamed for the failure, even when he had not been directly involved in the event.

Mutual distrust, one of the hallmarks of the Wam sibling relationship, was carried over into Tilli Bros. The members of the core group cooperated and worked in unison on issues which were the products of collective deliberation and which concerned the group as a whole. They also stood together in the face of challenge from other factions of the village; on the other hand, however, each one of the core group members also harboured and developed his own plans and ideas, often to the exclusion, and even detriment, of one or more of the others. Thus for instance, in mid-1985 it leaked out that Andrew, Gerry and Maurice Natile (their *krabei* through Wanengwa) had made plans to lease to the Sepik Cacao Growers (a Wewak-based company) on a long-term basis tracts of land, where this company would establish cacao plantations which would be run by a local manager employed by the company and which would, at the same time, provide wage opportunities for the members of Wotal Youth Group. The long-term lease involved a sum of 60,000 Kina. How concrete these plans were and how accurate the information was, especially in terms of the sum mentioned, is difficult to judge, but it is not so relevant. More revealing is how this information was handled and how the different participants dealt with it. Maurice maintained that it had been his idea and that he had then let Andrew in on the plan, because the latter had a large unused tract of land at his disposal. According to Andrew, it had been his and Gerry's plan and they had later asked Maurice to join. All were in agreement, however, that Alex was to be told nothing about the scheme. In the meantime, Maurice mentioned it to Numbia, a member of the active support group of Tilli Bros, and from there, through gossip, it soon became common knowledge in Warengeme 2. When Alex heard of the plan, he showed no reaction at all, which at the time rather surprised me, since after all, the whole affair had something conspiratorial about it. The fact that it did not elicit any reaction indicates that this type of behaviour was nothing extraordinary and that it lay within the expected range of behaviour between agnates. There were a number

of similar incidents involving the same persons but in other combinations. The schemes were often only spontaneous ideas which were hardly ever put into effect, but the pattern is revealing; it uncovers how fragile and volatile such collective enterprises were, even at the core.

I now come to the next layer of Tilli Bros. It is the segment I have labelled the effective network. This network includes six men. They are all from different lineages, none of them, however, belong to the Tillenge lineage. This segment I have divided into two groups, firstly, the four men that I have called the active support group, and the other two, older, men which I have described as being the cohesive element of the enterprise.

Of the four men that made up the active support group, three of them were residents of Enniki, the hamlet adjacent to Tillenge. They were Mahaite Ningaha, Sam Numbia and Lukas Wolimbi, all three of whom we have met already in a different context (cf. chapter 5). The fourth was Saas, who lived in Hagame and whom we encountered earlier on through his involvement in the early stages of the Bisnis movement. This group I have called the active support group because, as a rule, they were the first people to be informed and consulted when a new idea or project was being developed. One or two of them were always present at Tilli Bros' informal meetings and discussions. It was highly unlikely, however, that they would ever disagree with, or even veto, an issue that had been devised collectively by the core group. For this, their allegiance to both Gerry and Alex was too strong. But they were more than merely a group of blind acclamation. Their opinion was valued. Moreover, they were important in the sense that any scheme devised individually by either Gerry, Alex, or even Andrew informally had to pass the judgement of the active support group and needed its support and blessing. They were, so to speak, the group that could tip the scales in favour, or in disfavour, of one of the principal protagonists of the core group, and both Gerry and Alex cultivated their relations with these men carefully. Like Norbert within the core group, they held a control and balancing function. When tensions between Alex, Gerry and Andrew became taut and threatened to erupt into conflict, it was the members of the active support group, together with Norbert, who tried to mediate.

Whereas the relations within the core group were potentially, or even at times openly, antagonistic, the relationships within this second layer of Tilli Bros were extremely cohesive and sympathetic. Numbia and Wolimbi, for instance, represented a paragon of the Wam male relationship. They were immediate affines, having exchanged their full sisters in marriage. The two families not only lived in the same hamlet, they even shared a common house which they had built together. In addition, Wolimbi was Norbert Anisi's *pinandil*. Numbia and Saas were linked through a close matrilateral tie, so were Mahaite and Saas. Mahaite and Wolimbi addressed each other as *meinheil* too, firstly because they were linked through matrifiliation, and secondly, because Wolimbi, in a first marriage, had married a lineage sister (FBD) of Mahaite. Numbia and Mahaite were co-members of the Enniki lineage but belonged to two separate segments within the lineage (A1 and A2). They were, however, on the best of terms with each other, which is borne out by the fact that they shared residence. Saas and Wolimbi belonged to two segments of the *tineme*

lineage of Talkeneme ward (lines D1 and D2). They held together in all situations, especially in view of the fact that they had adversaries in common. These were the members of the *ereme* line (D3) who were trying to encroach on the *tineme* estate.

The four men constituted a tightly-knit group. They were not only interlinked in terms of kinship, they also cooperated closely and supported each other in matters such as gardening, house building or sago production, and in addition they were committed to Tilli Bros. It goes without saying that their relationship with both Alex and Gerry was good. It was characterized, on the one hand, by the insight that both men were invaluable for the functioning of Tilli Bros and the entire development process as such, and on the other, that their own position in the ongoing competition for status in the village was dependent on the success of the two principal figures. The larger Tilli Bros' sphere of influence grew, and the more dominant Alex and Gerry became on the scene of village politics, the higher they would also rise. Even Andrew, although his relations with Mahaite were strained after he had tried to seduce Mahaite's married daughter, was accepted in the group and was on friendly terms with Numbia and Saas.

This leaves us with the third cluster within the inner circle of Tilli Bros. These are the two older men called Landime and Mani. They, too, played a prominent part in Anisi's funeral, described earlier on. Although they had no knowledge of bisnis matters and contributed nothing in technical terms, they were present at all Tilli Bros meetings, and nothing of a crucial nature was ever decided on in their absence. Their significance resulted not so much from what they did, as from what they stood for. Through their seniority in age, their kin status in relation to the members of the core group, and their authority stemming from this position, they represented and acted as figures that symbolized unity and cohesion in the group. Both Landime and Mani were matrilaterally linked to the principal figures of the core group and were addressed as *anheil* by all four men. The common descent shared by the members of the core group implied unity and was frequently used as a metaphor of such but, in effect, it was the common matrilateral bond to these two senior men that created the sense of togetherness and accomplished what the metaphor expressed. The mothers of Andrew, Alex and Gerry (Silehile and Wanengwa) were Mani's full sisters and, in addition, Anisi's second wife, whom he had married in sister exchange, was a classificatory sister of Mani.

Landime of the *saharampe* lineage (line B) was linked to Tillenge through his mother, who had come from there. Anisi's first wife, who had died childless, had been a classificatory sister of Landime. A further factor which lent Landime great weight was the circumstance that the land on which Tillenge-Ahambil was located originally belonged to him and a brother of his. Some members of the *saharampe* lineage had lived in Tillenge until the war, but had moved away during the occupation by the Japanese and had never returned. However, Landime was still the rightful owner of the Tillenge land. Both Landime and Mani were regarded as traditional bigmen. The attitude of the four brothers, and also that of the other members of Tilli Bros towards these two senior men, was one of great respect and deference.

Although it is a less important factor in the functioning of the collective enterprise, it is noteworthy that the four men constituting the active support group were also closely linked to these two elders. Not all the links here were of significance but even where they were not, the relationship was characterized by the respect and attitude which is expected in a junior-senior relationship. Thus, for instance, Landime was regarded as the so-called "last father" of the Enniki-*saharampe* lineage cluster, and through that held a certain position of authority. Landime was Wolimbi's immediate *anheil*, that is Wolimbi's mother had been Landime's real sister. Saas had married a classificatory sister of Mani, thus creating a putative affinal relationship between the two. But the age difference, and the pre-existing cross link between Saas' and Mani's families – Mani had already called Saas' father *meinheil* – impeded the adoption of an affinal relationship, and Mani therefore remained *anheil* to Saas.

Not only were the two men themselves important for group cohesion but also a variety of persons who belonged to the immediate social vicinity of the two. It is here that we break out of the inner circle and move into the "extended network" of Tilli Bros. It includes people that were not directly involved in the dealings of Tilli Bros but were integrated in the social setting of Tilli Bros through their personal ties to the various members of the nucleus. It is noteworthy that this segment included a number of women. For one, there was Uhanue, Mani's wife and the eldest female member of the Tilli lineage. She was addressed by Gerry, Andrew and Alex as *ananei* (FZ) and treated with silent respect. Any, even mild, form of conflict between the three brothers was avoided in her presence, since it was regarded as extremely shameful to quarrel in front of an *ananei*. Similar to her in status was Landime's wife, Erkessi (she was addressed as *ni* (M) by the three men, even though they called her husband Landime *anheil*, mother's brother; it reflects one of the typical irregularities in the kin system). In contrast to Uhanue, Erkessi was one of the most outspoken women of the village and was not afraid to speak her mind on matters concerning Tilli Bros, even if it often was to the embarrassment of Landime. Mani's and Uhanue's three adult daughters nominally stood in an *elmessie* (W) relationship to the Tillenge men of that generation and, theoretically, they would have been the ideal partners in marriage for both Alex and Andrew. However, they had married differently but through their long-lasting affinity, and social proximity in childhood and adolescence, they had become "like sisters" to these two men and, correspondingly, they had undergone a transformation of kin status and were now addressed as *erhumo* (eZ) and *somauwi* (yZ) respectively by both Andrew and Alex. But not Gerry, who had never been that close to them and still addressed them as *elmessie*. Especially Alex reckoned these three women among his most intimate associates. They were, although "only" women, persons he could trust and rely on in any situation and, therefore, persons he paid much attention to and heaped favours on. It was these three women, together with the wife of Alex's kawas, who took over the role of providing Alex's wife with support in all matters and who helped her to integrate into the village when she came to settle down in Warengeme.

I could continue to list a number of other people who, through their connections with one of the members of the nucleus, were tied in with Tilli Bros without officially

belonging to it. The principle on which this extending network is based is the linking up of individuals who stand in a relation of significance to people who stand in significant relations, and so forth, to a member of the nucleus of Tilli Bros. It is here that the network becomes unbounded and reaches far into other segments of the village.

THE AURA OF TILLI BROS

As a group, Tilli Bros was never engaged in physical activity. It did not become involved in economic schemes like the komuniti wok project of the earlier WBG, or Wotal YG later. Its visible activity was restricted mainly to the "talking" level. Tilli Bros preferably convened for parleys and meetings during which potential projects and future ventures were elaborated on and discussed. These mainly referred to commercial projects, that is the buying and selling of diverse commodities. Many of them remained mere chimeras, others were actually realized as, for instance, the sale of second-hand clothes in the village, or the buying up of coffee in the neighbourhood. The actual business operations did not need the cooperation of the group as a whole but only of two or three persons, and much of the work was done by Gerry in Wewak. To a certain extent, Tilli Bros' success stemmed from the image it acquired in the village as being a venture that did bisnis and made profits, without having to invest a large amount of labour and energy. This distinguished it from other village enterprises and lent it an aura of Western style commercialism, which appealed to many people. To them, Tilli Bros was doing what modern bisnis and development were really all about. Later on, however, Tilli's apparent success also gave rise to contention in other segments of Warengeme 2, which belonged to the Bisnis movement at one level but increasingly found themselves excluded from what appeared to be the real form of conducting bisnis.

Actually, Tilli Bros produced a smaller turnover and made less profit than it appeared to be doing, but economic success and change was talked about all the more. During, and especially after, meetings the members were often miles ahead of their economic reality and capacities in their plans and ideas. These were often based on projections and future scenarios: when we've accomplished this, we'll be able to do that. This visionary side of Tilli Bros, and the Bisnis movement in general, the talking about what it would be like in the future, was an important element in the process. It triggered off a lot of optimism and enthusiasm, especially among the younger villagers, and proved to be a major incentive for the people to put aside the animosities and old rivalries that otherwise characterized the rapport between the various factions of Warengeme 2 for the sake of collective betterment. In this context, I believe it is significant that, like the earlier bisnis leaders who initiated cash cropping in the fifties and who had spent many years away from the village, the feat of bringing together the different factions under the collective roof of the Bisnis movement was accomplished by two men, Gerry and Alex, who were not permanent residents in Warengeme but had spent many years outside the village, working in the modern economic sphere and in urban centres. This lent the two men an aura of knowledge and sophistication others did not have, and made it possible for the villagers, who otherwise were so sensitive to the matter of equality and domination, to subordinate themselves and

accept them as lida (leaders). They were given more credit and enjoyed more scope to articulate and initiate novel ideas and new projects. The villagers expected them to bring in, and share with them, the experience and knowledge they had acquired from their time spent in the encapsulating system. Their expectations were high but, at the same time, they were prepared to accept the two brothers' authority and propositions, and yield to the restrictions of autonomy these entailed. Given the situation, Gerry and Alex enjoyed much leverage. The position they held allowed them to argue that everything they were doing was for the benefit of the village as a whole, and for the sake of komuniti, and any doubts and objections to a plan or a decision could be countered by reproaching such fault-finders with being ignorant and backward, and of adhering to kastom. Alex in particular, who was a much more public figure than Gerry, and was intent on boosting his image and status in the village, exploited the configuration effectively.

Unlike other leaders in the village, such as the village magistrate Hiale who had command of traditional lore relating to the tamberan and who ranked prominently in the traditional status system beside his position in the modern system, Alex and Gerry had no basis at all in the traditional system. They knew precious little in terms of traditional knowledge (the MEPTS-system, lineage histories, the naming system, land rights, etc.) and had never actively participated in the traditional ritual exchange system. All the status they enjoyed, and the influence they commanded, resulted from their experience of, and participation in, the encapsulating system outside the village. Although the villagers had little insight into what both men actually did in the modern sector, apart from the fact that Gerry held a high position in an office and that Alex was a teacher, their just being a part of the outside system lent them prominence. More specifically, it became evident to the people that both men had many contacts with influential positions in the outside world. Gerry knew people from the world of business, bank managers, company directors and other influential executives. He talked about them occasionally during meetings, and sometimes referred to one or the other in connection with receiving loans or other forms of support for projects of the Bisnis movement. Alex, on his part, was acquainted with numerous persons from the political scene and the provincial administration. This, for instance, became obvious from the fact that Alex was able to get transfers to schools of his liking whenever he wished. Evidently, Gerry and Alex knew people and people knew them. For the villagers this meant that the two men i gat namba (had a number), that is they were of prominence. It suggested that they had access to, and the ability to tap, the power contained in the encapsulating system and channel it to the benefit of the village. Both Gerry and Alex fulfilled the role of mediators between the two worlds, the encapsulating world of affluence on the one side, the disadvantaged world of the village on the other. A part of their influence resulted from the potential through which they promised to fuse the two systems.

As I have already pointed out before, Alex and Gerry shared many features in common but differed in others. Whereas Gerry was the quieter and more restrained personality, primarily interested in bringing know-how and economic development to the village, Alex was the more flamboyant, even pretentious, figure with a sound portion of "mitasolism",

ever sensitive to his public image. From the start, after his return from the Highlands, he did not conceal his ambitions and did not hide his plans to become engaged in politics, either on the local or on the provincial level. One of his main motives, he explained publicly, was to bring Warengeme forward and make it a modern village, on a sound economic basis through a strong collective movement and with good income opportunities and a high standard of living. A second motive, expressed less publicly but still audibly, was to wrestle political primacy in the village back to Warengeme 2, and away from Wohimbil ward.

Alex quickly became a conspicuous figure on the village stage of politics. He took every opportunity to challenge the authority of the leaders from Wohimbil and other established figures, as shown in the case of his father's funeral. Moreover, he was effectively able to communicate his ideas and plans to the villagers and spark off enthusiasm which had enough force to rally the otherwise factious parts of the village. Unlike others, he not only dazzled the people with his ideas and words. A decisive factor in his favour in this process was that he succeeded in backing up his ideas with action. He not only talked about doing things, he actually did them; he not only talked about building a new house and opening up a trade-store in Warengeme 2, he actually did so; he promised to stock kerosene there, which he did (see plate 25); he talked about reforming the youth group, subsequently he established Wotal YG; he spoke of organizing a soccer championship for the youth groups of the area, this too he put into effect. This kind of reliability made a strong impression on the villagers. It distinguished him from other village leaders, who were likely to put on verbal performances of strength but usually failed to let action follow. Later on, and especially after he had won his seat in parliament, this changed, and he too became inclined to talk a lot and do little, at least in the village. By then, however, he had proved himself sufficiently and, in view of his achievements, his status was not contestable and no one could effectively accuse him of being a mauswara, that is an empty talker.

Apart from his experience and knowledge of the outside world, and his rhetorical abilities, Alex possessed one main feature that marks the making of a bigman and that was his capacity to motivate others to act according to his ideas and motives, without, however, appearing to domineer or exert unnecessary pressure. He kept to the background and refrained from taking over official positions in any of the organizations of the Bisnis movement. Although he had brought Wotal to life, he was only a simple registered member of Wotal and he did not hold office. Instead, he delegated authority to others of his choosing which meant that he also passed on responsibility for the smooth running of the operation to others. In this way, he remained outside but also above the organization he had brought to life, as its mentor and advisor. He was not pestered with the petty problems and quarrels which accompanied the youth group. He was not accountable for its failures nor did he have to fear accusations – given the prestige and value of official positions and titles – of being hungry for power and domination, because he held no office, either in Wotal or in Tilli Bros. But, at the same time, nothing went on in Wotal without Alex. All important meetings were scheduled so that Alex could be present, and all major problems

were brought to him for consultation. He would advise and make suggestions, which subsequently were never doubted or criticized, but officially, and in terms of accountability, he did not dictate the terms or make decisions. The same is true of Gerry. He too never held an official position in any of the layers of the Bisnis movement. He ranked as advisor or "overall manager". Only in the MDC did he take over a position as director, and this, he maintained, was only for a limited period, until the new corporation had got started. Then he was going to step down again.

In this setting, Tilli Bros played an important role. It provided the organizational basis for the entire laminated Bisnis movement. All but one of the important offices in both Wotal YG and the Warengeme 2 Bisnis Group were held by persons of Tilli Bros and, thus, were intimately linked to the two central figures. Alex and Gerry were in a position at the core to influence any plan or decision involving the Bisnis movement. Also, Tilli Bros, not being a bounded group but more of an open network, reached into parts of the village where the two leaders did not have such strong ties and allowed them to extend their influence there too. This, for instance, was the case in Warengeme, the ward where Norbert originally came from and where he still lived. Quite a number of people from Warengeme became members of either Wotal or the WBG because of Norbert, and because he held a central position in the whole movement, and not because they felt especially close to Alex and Gerry. The same is true for Talkeneme, where an interconnected series of meaningful relations in the network brought the two quarrelsome segments within the *tineme* line (D2 and D3) together under the roof of the Bisnis movement. In Wolhete the men of the two competing *milmbe* lines (K1 and K2) shelved their animosities because both factions were on close terms with Gerry and Alex. However, these alliances remained fragile and broke up quickly when the gravitational force at the core of the Bisnis movement decreased, and Alex and Gerry shifted their attention away from Wotal and the WBG and became involved in larger, and more ambitious, ventures.

Although unity and cohesion in the Bisnis movement could not be sustained for a very long time, Tilli Bros played an important part in bringing the various factious parts of the village together in the first place. As I have described above, the Tilli Bros network was also important for internal cohesion at the centre, in the sense that it was able to ward off and cushion the rivalry and latent adversity between the principal figures of the group. All the ideas and the initiative went out from the centre of the group, from Alex and Gerry and, to a lesser degree, also from Andrew. Overall they cooperated with each other in the realization that together they could achieve more, but underneath the facade of sibling unity there was also competition for primacy and for the prestige of being the leader of the movement. Very often an idea by one contender was countered by the action of the other. There was very little mutual trust between the three brothers and they frequently withheld information from each other or did things they knew the other would object to. We have, actually, the typical pattern here of the Wam sibling relationship in which competition and cooperation coexist in a fragile balance. The balance was upheld by the presence and influence of the various cross relations in the group. Men like Norbert (who was only a

fictive *nauwie*), Landime (*anheil*) or Mahaite Ningaha (*meinheil*), or women like Uhanue (*ananei*) or her daughters were always ready to step in when conflict threatened to erupt and mediate between the contentious agnates. Thus, we find in Tilli Bros a paradigm of the Wam social system where the tension and dynamics of the agnatic relationship is offset by the cohesive force of matrilateral or cross relations.

I next turn to a description of Wotal Youth Group which played such an eminently important role in the life of the village in the mid-eighties. Wotal became the executive branch of Tilli Bros, so to speak. Generally, youth groups came to supplement, or at least complement, earlier forms of village development associations in many parts of the country during the 1980s. As Collins (1986:1) rightly remarks "... youth movements are often the manifestations of earlier social movements ... ." This observation also fits the pattern in Warengeme where Wotal Youth evolved out of earlier forms of the Bisnis movement.

I would define a youth group as a village-based development association which is, nominally at least, open to younger age groups. Its prime goal is usually economic development; other activities may include sports and cultural events. Normally, they are open to both young men and women; sometimes the women form separate groups within the same organization, or women are excluded. Many youth groups are organized by, or linked to, the churches; others are registered in the National Youth Movement Program (NYMP). In 1987, NYMP counted 10'000 youth groups in Papua New Guinea (McIllwraith, in: Stephenson 1988:5).

NOTES:

[1] The principal actors in and around Tilli Bros are the same people we encountered in the context of Anisi's funeral.

[2] The sons of the same mother but with different fathers are termed *krabei*.

CHAPTER TWENTY

WOTAL YOUTH GROUP

In the period from 1984 to 1988 there were at one time or another four active youth groups in the village of Warengeme. These were Einde YG, Wamus YG, Wotal YG and the Catholic YG. Other Wam villages had their own youth groups, as did villages of neighbouring language groups. Of the four youth groups in Warengeme, Wotal YG was the only "pure" Warengeme organization, the others included members from other villages as well. Thus, for instance, the Catholic Youth Group was organized through the Catholic Mission in Aresili and was parish based, which meant that its members were recruited from various villages, namely those belonging to the Aresili parish.

Wamus is a compilation of the names Warengeme, Muhiang and Seveneka and consisted of members from Warengeme, the neighbouring Muhiang Arapesh area and the descendants of the old bisnis leader Wangu Wangu, who resided in Seveneka, a locality between Bolumita and Balif. The active core of Wamus was based in Seveneka. The Muhiang members were linked to the people of Seveneka through marriage and friendship whereas the Warengemes that joined Wamus were mainly from one lineage which, in traditional times, had been linked with the Seveneka people through ritual relations. Wamus was very small. It consisted of not more than ten to fifteen members and it included no women. It was a very dynamic group but only very short-lived.

Einde Youth was made up of members from the Hambini ward of Bombossilme (Hambini 3), where its chairman and the majority of its members came from, and a few people from the ward of Wohimbil in Warengeme. The pattern reflects a traditional ritual association between the two wards, since many people of Wohimbil had ritual links to Bombossilme apart from their ties in Wohimbil. The fact that Wohimbil men became members in a youth group from a "foreign" village is also an indicator of this ward's rather marginal status in the village of Warengeme.

The largest group in the whole area, and the only pure Warengeme group, was Wotal. The name is an abbreviation of the names of the two main wards involved, Wolhete and Talkeneme. The great majority of members came from these two wards, but it also included a smaller segment of Warengeme ward individuals. This ward was the smallest in numbers and could not recruit enough members to form a separate youth group. In Wotal they were registered as "followers-on" but, in practice, they were treated as full members of the group. The only reference to their inferior status was the absence of their ward in the name Wotal.[1]

I now go on to describe the internal structure of Wotal Youth Group. I first deal with group composition and then I deal with the formal leadership of the group.

THE ORGANIZATION OF WOTAL YOUTH GROUP

Wotal was by far the largest youth group in the village and, probably, also in the whole area. With 122 registered members, it had nearly as many members as the smaller villages of the Wam region had inhabitants. Considering that the two wards from which the

majority of members were recruited had only about 300 inhabitants, it sounds demographically highly unlikely that forty percent of the population belonged to the adolescent age-group. This, of course, was not the case.

More than defining a specific age-category, the term "youth" was understood and used to describe the operational framework of certain activities: people did certain things under the label of youth, in spite of the fact that their age or marital status would have suggested that they were adults or elders according to indigenous classification. One such activity, for instance, was playing soccer. Soccer, people would agree, was "samting bilong ol yangpela" (something young people did) but this did not hinder fully adult men from joining in on Saturday afternoons and playing in one of the youth group teams. During the sometimes heated discussions after the game, they would sometimes address themselves and the gathered teams as "yumi yut" (we youth) or "mipela yangpela" (we youngsters), thus temporarily shedding their actual status and taking on one fitting the given occasion. Maybe the next day or a short time later, on a different occasion such as a local government council meeting, the same men would speak of themselves as "mipela papa" (we fathers) or "olgeta mipela hapman" (all of us influential men), thereby again adopting a status fitting the specific event at hand. The term youth, thus, acquires a status of contextual relativity.

The youth groups were the organizational structure within which these "youthful" activities were put into motion. Since the term youth did not primarily define a specific age-category but more a range of activities, it follows that there were no fixed age limits to youth group membership. Wotal YG boasted such a large membership because a much larger segment of the population joined the enterprise than our Western term youth would suggest.[2]

Nominally, membership was voluntary. Nobody was forced to join the youth group, and someone who preferred to join the Catholic Youth Group was not prevented from doing so. In reality, however, the mode of admission was rather different. It was tacitly assumed that people who by birth and filiation belonged to either of the wards involved (i.e. Wolhete and Talkeneme), were automatically members of the youth group. People wishing to join the youth group did not explicitly have to seek and apply for admission, it was rather the other way round: a person from Wolhete/Talkeneme had to explicitly state that he or she preferred not to join the group, or that he/she wished to join one of the others instead. This was especially true of the youngest age group (5-15 years). Children were generally not asked whether they wished to join or not; instead it was assumed that, since their parents were probably members, it was to be concluded that they too belonged to the youth group. Among the age group of the full adults (35 years and over) the decision whether to join the group or not was left to the individual concerned.

Table 8 below shows youth group composition by age and sex. Age-group boundaries were chosen to coincide approximately with the categories "child", "adolescent", "young adult" and "full adult".

Age groups	Child		Adolesc.		Young adult		Full adult		Total	
	5-15 years		16-25		26-35		36+			
	N	%	N	%	N	%	N	%	N	%
male	17	22	36	46	17	22	7	9	77	63
female	10	22	20	44	11	24	4	9	45	37
Total	27	22	56	46	28	23	11	9	122	100

Table 8: Youth group composition, by age and sex

As the table shows, there were 122 registered members in Wotal Youth Group. The majority of members, i.e. 109 individuals, were from the two lower wards, 13 members were from Warengeme 1. Seventy-seven or 63% were male and forty-five or 37% were female. Distribution by age-groups was as follows: the "adolescent" group (15-25) represented the largest segment with 56 members or 45.9%. Within this age-group there were 36 males or 64% and 20 females or 36%. Following the "adolescent" group with practically the same number of members were the "young adults" with 28 or 23% and the "children" with 27 or 22%, whereas the "full adult" group was represented by only 11 members or 9%. Within the "young adult" group the sex ratio was 61% males to 39% females; within the "child" group the ratio was practically the same, 63% boys to 37% girls. The "full adult" group also displayed the same ratio: 64% men and 36% women.

Where membership status is concerned, a distinction was made between two types of membership: "active members" and so-called "supporters". The distinction, however, remained rather flexible. There were a number of members whose definite status I, and I sometimes believe they themselves, could not quite define. Basically, the criteria that decided the respective status were age, activity and membership fee.

The bulk of active members was recruited from the two middle age groups, "adolescent" and "young adult". They made up seventy percent of the group and were regarded as its core. It was expected that they would participate in most of the activities and do most of the work. Nominally, this was the case but since the rate of economic activity and work discipline were generally low, a point I shall come back to later, activity never really became a reliable measure of membership status. There were quite a few members who were reckoned as active members but who never, or only very rarely, turned up on the appointed work days. On the other hand, there were quite a few so-called supporters, generally older members, who regularly contributed their time and energy to the youth group projects. The young women and girls especially found it hard at times to meet the demands of active membership, since their economic roles as wives, mothers or daughters left them little opportunity for additional labour activities within the youth group.

The second criterion by which membership was nominally determined was membership fee. This was set at ten Kina for active members and five Kina for supporters. It represented quite a substantial sum for many of the younger members who did not yet own their own coffee gardens and were therefore still dependent on their parents. Moreover, the membership fee was laid down before the coffee season started, when everybody was short of cash anyhow, with the consequence that very few people were able to pay. Later on, the rule was changed by the leaders, without consulting the members, and people were asked to supply a plastic rice-bag of coffee, weighing approximately ten kilos, which, at that time, was worth something around nine Kina. This change of rules caused a considerable amount of confusion because initially it was stated that the bag of coffee was to be considered as an additional membership fee; but many could not afford this, and others were not prepared to contribute twice; others had not even paid their normal membership fee. In the end, it turned out that the majority of members had paid at least one of the fees, some had made both contributions and some had not paid up at all.

The so-called supporters, nominally but not effectually distinguished on the basis of activity and membership fee, generally belonged to the two upper age-categories. Often they were fathers and mothers whose children were involved in the youth group. The oldest member of this category was well into his fifties and three of his six children were active members. In discussions and debates concerning the youth group these elders would often join in and give their opinion on the matters being discussed; occasionally they would even lend a hand with the work. But generally their role was seen as giving advice: seeing to it that their children cooperated in the group but also watching that the youth group did not absorb all their children's time and energy. As for the youth group leaders, membership of these fully-adult persons was appreciated, not only because of the support and advice they gave, but mainly because their membership enhanced the status of the group as such and lent it weight and authority in the village as a whole. Their participation highlighted a point which was strongly emphasized by the leaders, namely the credibility of the whole project: Wotal was not a group of youngsters on a wild goose chase, but a serious enterprise bringing development to the village.

The youngest group, the 5-15 years, was rather amorphous. The majority had not joined voluntarily but had automatically become members because either their parents or elder siblings were members. One reason often given for their membership was that they belonged to one of the kastom ples involved and that, in a few years' time, they would be old enough to become active members. However, they were registered as members and they were expected to pay a membership fee of five Kina, as required from a supporter. Naturally, they themselves were in no position to raise the necessary money, so it was up to their parents or elder siblings to pay the fee for them. Although some of the members of this category sometimes participated in the activities, the majority remained inactive, partly due to a lack of interest in what their seniors were doing, partly because they were at school and thus were not able to take part in the youth group activities during the week.

The women were recognized as full members and their status did not differ from that of the male members. They were expected to pay the same membership fee as their male

counterparts and contribute their share in the work projects. Yet in two fields they were granted partial autonomy. Firstly, they organized their own sports events together with the women of other youth groups in the area, and secondly, which was more important, the women had their own separate bank account. Any money the women earned on their own, and also a share of the revenue earned collectively, went into their bank account.

The leadership structure of Wotal Youth Group was laid down in a formal constitution. Considering the setting, it was quite an elaborate document. It was drafted on a Western model and contained no traditional elements, at least not on the surface. Wotal's constitution actually consisted of two written documents that were drafted by the first chairman of the group. The first document was named "Ripots bilong Wotal Youth Group Waringame No. 2" (Reports of Wotal Youth Group, Waringame No. 2). It consisted of four paragraphs and dealt with the more general nature of the enterprise. The first paragraph defined the composition of Wotal, i.e. the three wards involved. The second paragraph explained the fundamental disposition of Wotal, stating that "we members of Wotal Youth are trusted men and women, we are all Christian people. We cooperate in all our work.[3]" Paragraph three referred to the organizational structure of the youth group and briefly demarcated the roles of the various functionaries. The last section laid down the regulations concerning the group's financial dealings, the most important aspect being that the men and women of Wotal owned separate bank accounts.

The second document was called "Konstetusen o mama lo bilong Wotal Youth" (Constitution or "mother law" of Wotal Youth). It consisted of eleven paragraphs and dealt with the more specific internal regulations of Wotal, such as the number of work-days per week, the working hours, the youth group's hire fees, the correct procedure for regulating internal problems and a number of other similar issues.

The existence of the two documents was known to the members of Wotal, and referred to as the constitution, but they were never formally voted on or endorsed by a general meeting or some other constituting assembly. Nor did the contents of the documents bear any relevance to the actual functioning of the youth group. However, the mere existence of a written constitution was of significance for two reasons: firstly, it acted as a symbolic marker of modernity and the development process Wotal was engaged in, and it lent the enterprise a degree of sophistication which fenced it off from traditional Wam culture, kastom, and forms of organization. Secondly, it lent the group a basis of legitimacy, both towards its own members and towards outsiders, and provided a gauge by which the behaviour of the members could be judged and which set the standards by which deviation was evaluated, at least ideologically. The governmental body consisted of ten officials. The organisation chart is shown below in diagram 15.

At the lower end of the hierarchy stood the three so-called "committee" men. Each of these three represented one of the wards involved in the enterprise, and acted as liaison and spokesmen between the upper echelons of the leadership body and the base members of their respective wards. Their main task consisted in rallying and organizing the members on work days, and seeing to it that nobody remained absent without offering a sound

excuse. Understandably, this position was rather unpopular and at the time the leadership body was formed there were no volunteers for the job.

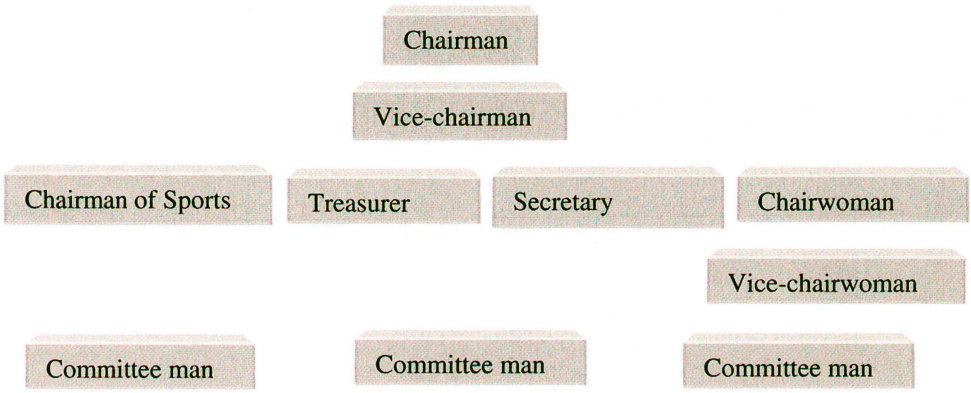

Diagram 15: Wotal leadership structure

The treasurer was responsible for the financial side of the youth group. He kept records of all the youth group's earnings and expenses and he was in possession of the cash box where the money was held until it was transferred to their bank account in Wewak.

The secretary's task was to take notes and make records of all the proceedings of the youth group meetings. Since official meetings were not held frequently and there was practically no correspondence to be done, the job involved no great work input.

The chairman of sports was responsible for selecting and nominating the two Wotal teams which participated in the local soccer championship. Games were held on Saturday afternoons between the teams of the surrounding villages and were organized by the Aresili Youth Sports Association (AYSA), to which all the youth groups of the area belonged.

The chairwoman was the representative of the female members of the group. In her position she combined various functions. Not only was she the spokeswoman for the women's ideas and complaints in relation to the youth group as a whole, she also acted as secretary, chairwoman of sports and treasurer. She was assisted by a vice-chairwoman.

Wotal Youth Group was presided over by a chairman and a vice-chairman. As such, the chairman acted as the representative of the youth group in dealings with government agencies, village officials and parents, some of whom were, of course, members of the youth group themselves. He carried the responsibility for the group's activities as they affected outsiders and for decisions and actions of the leadership body in relation to the base members. His powers were limited, however, and he could make no major decisions without convening a general meeting or at least a committee meeting.

These ten officials together formed the "youth committee". This panel met infrequently to discuss issues or to handle problems, mainly concerning the group's economic ventures. The idea, for instance, to change the membership fee from a payment in cash to one in coffee was first discussed within the youth committee and then, later, presented to the general meeting. On paper, there existed a second board called the "youth council". Its function, however, remained unspecified. Nominally, it was composed of the youth committee and several other youth members from the different wards. Since this body never conferred, its appointed role remained unclear and in no way affected the running of the youth group.

Seen from this angle, the constitutional perspective so to speak, the youth group displayed a clear-cut organizational structure, with a governing body of ten officials, each with an assigned role and function. The communication link between the base and the leadership body was nominally maintained by the youth council and the committee men, lending transparency to the dealings and ideas formed on the executive level and thus allowing the members at the base to participate in policy-making and to partake in decision-making within the youth group general meeting.

However, seen from another angle, one could say the effective perspective, it becomes clear that there was a set of quite different factors and forces governing the youth group movement. The mechanisms that set the youth group in motion, and kept it running, were not, or only partially, lodged within the constitutional framework described above. To have insight into how the youth group was run, how it functioned, in effect, as a collective and, ultimately, what role it was playing in the village of Warengeme, we must look at how Wotal, and especially its leadership body, was interlinked with Tilli Bros. If we fill in the boxes in the above diagram with the names of the various office holders it will become clear that all the positions, with one exception, are closely associated with, or identical with, the figures of the Tilli Bros network.

Some positions within the leadership structure were of more significance than others. For instance, the vice-chairwoman as well as the vice-chairman were hardly of importance to the youth group's well-being, but it is still noteworthy that both the persons who held these positions stood in a close relationship to Alex Anisi and also, but to a lesser degree, to his brother Gerry. Lukas Wolimbi, the vice-chairman of Wotal, held the same position in Tilli Bros and belonged to the segment there which I have defined as the "effective network". Peimili, the vice-chairwoman, was the wife of Alex's *pinandil* or kawas. Both Peimili and her husband took over central roles during Alex's absence at school, in the sense that they took over the guardianship of Alex's family and house. Peimili, together with the daughters of Alex's *anheil* Mani, actively helped Baru, Alex's wife, to get accustomed to Warengeme village life.

Baru herself became the chairwoman of Wotal. She was highly respected and liked by the other village women in spite of being, or rather just because, of being an outsider. Her foreign origin partly freed her from the narrow restrictions of social norms and gender relations, and allowed her to operate more freely within the otherwise male-dominated sphere of the youth group. Unlike the other women from the village she did not hesitate to

speak up during meetings and stood up for the women's cause and interests. Due to her status as Alex's wife, her deeds and actions reflected back on to her husband and had positive reverberations for Alex's position (see plate 24).

The position of treasurer of Wotal was held by Uhane Anisi, whom we have already met above in the context of Anisi's funeral. As the name implies, he was closely related to the central figures around Tilli Bros. Besides being one of Anisi's adopted children, hence the name, he had also married Anisi's daughter Aresi (Gerry's full sister, Alex's half-sister) and was, therefore, a *meinheil* to both the principal figures of Tilli Bros. He stood on intimate terms with Gerry – less with Alex – which is also borne out by the fact that he bestowed an ancestral name of his own lineage on Gerry's first-born son, which meant that Nuhalangi, as he was called, would later inherit estate from Uhane's lineage. Uhane was a devoted ally of Gerry, and hence stood in approximately the same position, though perhaps with less influence, as Norbert Anisi did to Alex.

On a par with his standing in Tilli Bros, where he was the chairman, Norbert Anisi also held a controlling position within Wotal Youth Group. He was Wotal's secretary but, in addition, he was also the chairman of sports and also that of AYSA, the federation of youth groups in the area which organized the soccer championships and also women's sports. He thus combined various important positions in one person. The AYSA was the first, and largest, inter-village project Alex launched after his return to the village from the Highlands. Although in effect it folded up after only several months (it continued to exist on paper), the project was rated a success and it helped to make Alex known in his role as an emerging politician to the wider population in the area. Later, this proved a valuable asset when he was campaigning for a seat in the provincial parliament. The reasons for the disruption of the soccer championships were located elsewhere and did not directly affect Alex's popularity. I have already outlined Norbert's position within the setting of Tilli Bros, so I do not need to repeat it in detail, apart from pointing out the fact that is was mainly through Norbert, as his chief executive, that Alex kept a check on the various layers of the Bisnis movement.

The man Alex chose as the chairman of the youth group was called Senson Perite. He was a man in his late twenties who was married to a widow with two children. He was an open and sociable person and was generally liked and respected by the others but he did not radiate a high degree of authority. In addition, his rather strained relationship with his wife and the fact that he beat her regularly had a negative influence on his position. His behaviour was often severely criticized by the more senior villagers, who maintained that as chairman he was setting a bad example for the youth.

Alex's choice of Perite as chairman was influenced by the circumstance that there was not an inexhaustible list of suitable candidates, i.e. who fulfilled the requirements of a certain degree of acceptance in all segments of Wotal, social age and some degree of education and experience. In this sense, Perite was an ideal choice. But it was also a tactical choice in the sense that, through Perite's nomination, leadership was officially situated outside the immediate sphere of Tilli Bros. Perite belonged to a completely different segment of Warengeme 2 and had no specially close links otherwise with the

people of Tillenge. Alex was thus able to forestall any overt accusations of factionalism or nepotism. At the same time, his selection created a close bond of dependency between the chairman and himself, which again secured Alex a high degree of influence over youth affairs.

I hope that through this short description of the internal structure of Wotal Youth Group I have been able to clarify an important point to which, so far, I have made several references by implication. That is, that Wotal, apart from having an existence in its own right, must also be viewed as an extension of the activities of Tilli Bros and, lastly, as an important component within the pattern of pervasive factionalism which prevailed in Warengeme.

YOUTH ACTIVITIES

The projects which the youth group considered, covered a wide span of activities, ranging from charity work in the village, to sports and the establishment of large-scale cash crop plantations. Economic ventures were clearly the central issues and given priority, whereas the non-economic projects, with the notable exception of sports, never got beyond the talking stage. One such plan, which never became reality but is of significance all the same, was the idea that the youth group should stage a traditional *waki* dance[4], on the occasion of the tenth anniversary of Independence. A number of village elders were consulted and asked to teach the younger men the correct songs and dance steps. The topic was brought up at a local government council meeting, where it became clear, however, that the more influential village elders were not in favour of staging such an event. The village magistrate, Hiale, otherwise a close supporter of Wotal, maintained that it would be dangerous to activate kastom in this manner for the mere sake of a singsing nating, i.e. a dance or celebration merely for fun. The event did not take place. As it turned out, this was the only occasion when elders in the village ever vetoed a youth group project. Otherwise, Wotal had the support of all age-groups and segments of Warengeme 2.

The only non-economic project that was ever realized was "sports", in the form of a soccer championship for the men, and basket- and volleyball for the women. The games were played on an open space near the mission station and the school. It would be wrong to believe that sports was merely a minor or even trivial matter. Not only a lot of time and energy was invested in organizing and staging the games, they also aroused a high degree of enthusiasm and emotion among all age-groups prior to, during, and after the events. The soccer games became, unintentionally, the forum where the younger villagers aired much of the latent rivalry and competition between the various villages and village factions. The games, notably the men's contests, often ended in fights and brawls which in turn generated more animosity and conflict. The championships were organized by the newly-founded Aresili Youth Sports Association, which included all the youth groups of the Wam area and those of the neighbouring villages of Bolumita and Albineme (Muhiang Arapesh), Luwaite (Wam-Urat) and Eimul (Urat-Wam).[5] The AYSA had been Alex's idea; its chairman was Norbert Anisi, the secretary of Wotal and chairman of Tilli Bros. Women's sports were organized and managed by Alex's wife, Baru. From May through to

August, the soccer championship was a running major event. Saturday was the day reserved for the games and all other events were subordinated; even the all-important local government council meetings which had traditionally always been held on Saturdays had to be switched to Fridays. Despite the brawls and disputes that often accompanied the games, sport was rated as one of the more successful youth group enterprises. However, the games finally broke down at the end of August 1985. The end came when a new system of play was introduced. Until then, the games had been played in a round robin system – each team playing the others several times – but now that the final round was approaching, it was decided to change to a knock-out system. Although the decision had been taken by all the teams, the system came under heavy attack as soon as it became evident that a team which had lost was definitely out of the championships. Subsequently, the losing teams went back on their decision and demanded that they should receive a second chance, that is an opportunity to play against another loser and thus qualify for the second round. They finally got their way but, naturally, it played havoc with the whole system. With accusations against the village of Warengeme of operating a wantok system (being partisan in favour of their own teams) many of the other teams pulled out and the championships came to an end.

On the economic side, the youth group initially had two projects in mind. The first was the plan to set aside a large tract of land and develop it as a youth group cacao plantation, the second was the so-called komuniti wok scheme. There was nothing new about these projects, both had been on the list of earlier collective enterprises as well. A major problem in the plantation project was, of course, the land question. There was no acute land shortage in Warengeme 2, but there was no lineage segment or individual that either had control over a sufficient acreage or was willing to put it at the youth group's disposal. The project was never realized but it was talked about a lot and it became more of a sort of paradigm of how the villagers envisaged a successful venture to be than a concrete project. Everybody realized that the land question was an insuperable obstacle but the idea was never quite abandoned and the project was still listed as one of the youth group's running projects.

The second project, which became the major venture in the following weeks and months in 1985, was the komuniti wok scheme. The term is rather misleading but what it meant was that the youth group hired itself out as a labour force to potential contractors, from both within and outside the village. The rate of hire was initially set at five Kina a day for Wotal members and ten Kina for nonmembers, irrespective of whether they were from Warengeme or another village. The job range was not specified. The youth group was prepared to take over any kind of assignment, from mending roads to building houses and picking coffee. Although, in principle, they were prepared to do this as well, their services were never sought for traditional gardening and other subsistence activities. This was partly due to the fact that work in the subsistence sector did not generate a cash income so that the people could not afford to hire outside labour for this sector. What was more significant was that the two complexes, youth groups and subsistence, were just not compatible in the people's understanding. Youth groups were related to modern issues,

such as coffee, development and money, whereas subsistence gardening and sago production remained sectors culturally still deeply embedded, and where the traditional work pattern and the code of mutual help among family, kin and friends was still very much in force. As it turned out, the youth group was hired exclusively for work related to cash cropping.

The mode of hire was quite simple: a man or a family requiring the services of the youth group would contact one of the committee men or one of the other officials, frequently the chairman himself, explain what was wanted, and set a date in the near future. The rate of hire was fixed, and the only time unit recognized was a day's work. On the part of the contractor it was expected that the assignment would not exceed one day's work; within this limit it was left to the youth group how much time and labour they wanted to invest in order to complete the task set. It made no difference to the rate of hire whether it took sixty members two hours to finish the job, or whether it took five members the whole day. This convention concerning the volume of the assignment and the time/labour input, which, in theory, was open to interpretation and subjective assessment, caused a dispute only on one occasion, when the councillor of the neighbouring village of Bana (who was on very close terms with the principal members of Tilli Bros) hired Wotal Youth Group to prune his coffee trees. He had voluntarily paid fifteen Kina, instead of the standard ten because it was a big job. When a small number of Wotal members finally appeared at midday to start work, the councillor was extremely annoyed and demanded his money back, with the argument that he had hired the whole group for a full day's work. He sent them back and hired the Bana Youth Group to do the job the next day.

Thursdays were set aside as youth group work days. On work days, the members were ordered to meet shortly after daybreak. This, however, was never the case, and usually the people began drifting in between nine and ten o'clock. There was no fixed meeting place, which made punctual gathering a rather tedious affair. Each hamlet group would wait until they saw a sign that the members of the most outlying hamlets were appearing, before they made a move to find the others. If, for some reason, the men of the last hamlet had decided not to turn up for work on that day, nobody moved and the start of work was delayed endlessly.

In the early phase things ran quietly, i.e. from the beginning of May to around mid-June. The villagers were preparing their coffee gardens, ready for the picking season, i.e. cutting grass and pruning the coffee trees. The youth groups were regarded as a comparatively cheap and efficient source of labour, so there was quite a demand for their services, especially from families with several coffee gardens. When the first round of picking began in June, the number of assignments increased rapidly, and it soon became apparent that at the rate of one work day per week, the youth group would not be able to fulfil all the assignments within a limited time span. Time, of course, was limited because the coffee could not be left hanging on the trees indefinitely.

It was at this stage that some of the group's problems began in earnest. Basically, they were facing an allocation problem, namely how to divide the group's time and labour resources so as to meet the demands of their services efficiently. There were two possible

alternatives: either to split the group into smaller work units so that several assignments could be carried out on the same day, or to raise the number of work days per week. The first strategy was never seriously considered and, to the best of my knowledge, the youth group split up into a women's and a men's work group only on one occasion. The main reason why this strategy was not applied was that the group, in spite of its overall size, could not rally enough members to man several efficient work units on the same day. So there was practically no other choice but to increase the number of work days. First, Fridays were added, and when it became apparent that even two days were not enough, Wednesdays were included as well. The question of raising the number of work days was never discussed in an official meeting with all the members. Had it been brought up for debate, the members would probably have vetoed the idea. Instead it was the so-called youth committee that made the decision. As a result, the entire komuniti wok scheme began to falter, and broke down completely two or three weeks after the three-day rhythm was introduced.

In spite of the 122 registered members, the work force available for each assignment was very small. It averaged 20 to 25 members. With a few exceptions, these were unmarried men and women who belonged to the "adolescent" or "young adult" age groups. Moreover, it was practically always the same members that turned up for work. The majority either never showed up, or only once in a while. Occasionally, some of the older members joined in, but this was never much more than a formal gesture on their part. Furthermore, the majority of the regular workers were from the more central hamlets on the main ridge. Their residential situation put them at a disadvantage in the sense that their movements were easier to control. It was difficult for them to disappear quietly on the mornings of work days, whereas the members from the outlying and more peripheral hamlets could slip away more easily and did not have to worry that the people would come looking for them. This situation, in turn, led to frustration and resentment on the part of the regular workers, who considered it unjust that they were doing all the work but the collective as such was reaping the benefit, i.e. the money earned through their labour.

Another source of problems was that the work assignments that came from within the group, especially from its younger members, were only given second priority, after the assignments from outsiders because, of course, the latter were generating more revenue. This arrangement was regarded by those affected as unfair and contrary to the idea of the youth group. When the number of work days was increased the members found themselves with little, or no time, left to do their own work, either in their food or coffee gardens. In addition, the parents, especially those of the younger women, began to complain, mainly because their daughters were no longer around to help in the gardens and in domestic tasks, but also because they were not in favour of their daughters being left unsupervised for longer periods in the company of their male peers. There were a number of incidents where young couples eloped after a day's work in the youth group, especially when an assignment took them out of the village.

As a result, the enthusiasm for the youth group idea began to wane. Work assignments were still accepted and work days called out, but never more than eight to ten members

showed up, and the assignments were not carried out. Within the youth group, the members turned themselves into small self-help groups to do their work in their own coffee gardens on a reciprocal basis, which is, of course, the traditional work pattern. The word that Wotal was no longer reliable spread quickly and, as a consequence, the flow of assignments from outsiders dried up and many contractors came to demand their money back for work that had never been done. During this period, Alex was away teaching, and the other officials did not have the necessary authority to put the youth group back into shape. In view of the crisis and the impending breakdown, it was decided to call a general meeting in order to seek a solution and find a remedy for the youth group's troubles. Not only had all the economic activities come to a standstill (the sports events continued however), but the factions from the different segments of Wotal had already begun to make the first accusations of blame for the crisis.

The Wotal general meeting was held on a Sunday afternoon in the hamlet of Akumeneme and was attended by some forty to fifty active members including the principal leaders of the Bisnis movement, with the exception of Gerry Anisi. The agenda consisted of thirteen items which had – in conformity with the formalism that governed such official events – to be handed in in written form to the secretary of the youth group prior to the meeting. Some of the issues had been raised by the YG leaders, other by the base members. It would be going too far to discuss each single item here (cf. Stephenson 1987: 40-46). Some were more important than others, and many of the problems discussed overlapped. The main discussion revolved round the very basic question of what aims the YG was actually following and, more specifically, whether the youth group was to be a profit-orientated bisnis group or something more like a self-reliance group. In other words, was it the aim of the youth group to maximize its revenue on a collective basis through such projects as komuniti wok or should the YG look more towards its own members and help them in raising the individual level of income through the establishment of coffee or cacao gardens for each individual member.

The meeting was split on the issue. Many of the more adult members who already owned one or two cash crop gardens were in favour of the former strategy, whereas the younger members, many of whom were still at least semi-dependent on their parents in terms of landownership and usufructary rights, favoured the second strategy. In the end it was Alex Anisi who tipped the scales in favour of the latter strategy without, however, antagonizing the opposing party. His argument was as follows: in principle there was nothing wrong in the youth group hiring out its labour to outsiders but it was wrong to do it at such a low rate of hire (10 Kina) because it was leading to a situation where strangers and outsiders from other villages were making large profits through the efforts of the youth group. When the youth group took on an assignment they had no way of knowing how big the job was going to be. It was possible that they would have only a small coffee garden to pick but it was more probable that they would be engaged to do a much larger job, which would in the end leave the owner with maybe three bags of coffee for sale. He would be earning well over 100 Kina at a labour cost of only ten Kina. Here Alex's argument became pointed: this arrangement was wrong, he argued, because the youth of Warengeme

were thus assisting strangers and, thereby, strengthening another village at the expense of their own home village. The main objective of the youth group should be to support the people of Warengeme itself. The aim should be that by 1986 each member of Wotal would be in possession of a large coffee garden of his own, which would be established by the group for each member. In immediate terms this would mean less income for the youth group as such, but in the long run the returns for the individual members would be higher. They should still take on assignments from the outside but these should be given only second priority and the charge should be raised from ten to thirty or forty Kina. The argument went down well in the assembly, and Alex's proposition to change the group's priorities and raise the rates for outsiders was accepted in a vote.

Apart from the first seven to ten days following the general meeting, which were marked by a spirit of enthusiasm for youth affairs, the weeks following the event showed no overall change from the time before the meeting. The various resolutions had no immediate impact, and the enthusiasm quickly went back to its pre-meeting level. By this time of the year, August/September, the people were more heavily occupied with their own work: they were picking their coffee, the yam harvesting had begun, and many of the younger people who had food gardens of their own were busy enough without being burdened by youth group work. As some people had predicted at the general meeting, the raising of the rates for outsiders had the effect that the youth group received no more assignments from other villages or from other segments in Warengeme after the word spread that Wotal had raised its rates. The whole youth group enterprise was facing its next crisis.

It was in this period that a new project was proposed, this time by Gerry Anisi. The project concerned the purchase of a complete set of electric musical instruments with which Wotal was to form a band which would play at the increasing number of patis and "social nights" in the area. Gerry was able to convince Saas, the chairman of the Bisnis Group, of the validity of the scheme, and he also quickly won over the chairman of Wotal. Alex was not present at the time. He was informed about the project when he returned to the village a week or two later. He was basically against the project, nominally because of the high investment costs and because it constituted a reversal of the youth group policy as it had been formulated during the general meeting. But he was also averse to the project because it had been launched by his brother Gerry, his closest ally-cum-rival. Gerry's involvement in youth group affairs was an encroachment on Alex's sphere of influence. The idea of a set of instruments with its promising combination of high profits and low labour input coupled with the high prestige band musicians enjoyed at patis appealed to the large majority of Wotal's members.[6] Aware of this and unwilling to jeopardize his popularity and status among the younger villagers, Alex did not openly oppose the project; instead, he publicly gave it support, albeit half-heartedly, and sided with Gerry on the matter diplomatically but, at the same time, he let his doubts concerning the band's chances of success leak out to some of the more influential villagers. When the project finally failed some time later, Alex was able to remind the people that he always had been

sceptical of the idea and that the youth group would have done better to heed his words and stick to the policy developed during the general meeting.

The project sparked off a new but brief enthusiasm for youth affairs. The main obstacle to the realization of the project was, of course, financial. It is here that we witness the interlinkage and flexibility between the three layers of the Bisnis movement, that is between Wotal Youth Group, Tilli Bros and the Warengeme 2 Bisnis Group. The cost of the set Gerry planned to order from Rabaul were estimated at 4000 Kina. The sum was well beyond the reach of the youth group but through a combined effort of the three layers they believed they could raise the money.

The youth group's balance of earnings was as follows: 195 Kina through the komuniti wok scheme; 100 Kina from building the author's house; 560 Kina in the current account in the bank in Wewak; 480 Kina from the sale of the coffee the members had been asked to contribute additionally. This sum, however, was only an estimate, since not all members had made their contributions and the coffee was still unsold. Together this makes a total of 1335 Kina. The further financing was planned as follows: since the youth group was not creditworthy at one of the commercial banks and it was unlikely that the National Youth Movement Program would contribute to such a project, it was decided that, in place of the youth group, the Bisnis Group should apply for a loan of 1900 Kina from the development corporation (the LDC) where it was registered as a member. They reckoned that their chance of success was good because Gerry was employed there. In addition, the Bisnis Group was prepared to lend the youth group the remaining 800 Kina out of its own bank account.

It is significant that neither the members of the Bisnis Group nor the members of Wotal were consulted in the matter, nor was any kind of meeting held where the two groups had the opportunity to decide collectively on the issue. The decision was taken over the heads of the rank-and-file members by a few of the leading figures around Gerry Anisi and Saas, the chairman of the BG. Gerry's involvement in organizing the necessary financing was not completely altruistic. When he had made the suggestion that he should use his influence to secure a loan he had done it on the implicit condition that, should he himself later need financial support, he could rely on the Bisnis movement to grant him a loan in turn. This would allow him to avoid having to go to a commercial bank and ask for credit, which would involve the cost of interest rates.[7]

The plans to purchase the set, however, once again did not go beyond the planning and talking stage, at least at the time. After the brief euphoria died down, Wotal went back into a quiescent state, and all the activities came to a halt. The AYSA ceased to exist when the soccer championship came to an abrupt and final end after a brawl between the youths of Warengeme and Aresili. Wamus and Wotal – the two youth groups with their origin in Warengeme 2 – were blamed for the failure of the games by the groups from the surrounding villages. They were accused of trying to dominate the sports events and of attempting to dictate the terms of play. This, according to the other villages, was typical of Warengeme as a whole, which, being the largest Wam village, was often accused of domineering over the other villages in political and economic matters. When one member

of Wamus died a few months later, sorcery accusations were raised and the people of Warengeme 2 maintained that he had been killed as a result of the quarrels stemming from the soccer games.

There are a number of reasons why Wotal Youth Group was not able to sustain the rate of activities and operate as a successful collective enterprise. In this sense, Wotal was no more successful than any of its predecessors. The reasons for this failure are located on two separate but interrelated levels: a deeper level which involves village politics and factionalism, personal strategies for the acquisition of status and power, and lastly, mechanisms which are deeply rooted within the Wam socio-cultural pattern; secondly, a surface level on which we are confronted with the deficiencies of organization. I shall be returning to the deeper level later on, for the moment I will restrict the discussion to the surface level.

One reason why Wotal failed to keep on going was the absence of clearly-defined targets and goals. Whilst the overall aims of "helping the village" and "bringing development to the village" were generally and widely accepted, they provided no motivational basis because they were too vaguely formulated. After the initial enthusiasm for the youth group subsided, the rank-and-file members began to ask themselves what the youth group was actually trying to achieve. It had no clear target in mind such as, for example, the building of a new community hall, the purchase of a car, or even of generating personal returns in the form of individual revenue. It appeared to the members that they were being asked to regard the youth group as a self-explanatory, and intrinsically self-rewarding, affair. This issue was raised at one point during the general meeting when a small group of members suggested that Wotal should stage an annual feast at the end of the year, for which the youth group should buy a pig, rice and other foodstuffs from its funds, in order to celebrate and consume some of the efforts they had invested during the year. The idea, however, was turned down by Alex and some of the older members with the argument that such a lavish, but unique consumption would not be justified considering the amount of labour and time the youth group had invested over the last months. Another factor, which was not explicitly mentioned in the context, was that the staging of such a feast was tinged with traditionalism, or kastom, which was not compatible with Wotal's policy and the basic idea of the youth group being a development-oriented organization.

Secondly, the komuniti wok scheme, the youth group's main field of enterprise, was extremely inefficiently organized. Much of the time set aside for komuniti wok was wasted on either waiting for the group to collect in the morning or getting to the site of the assignment, or both together. Discipline was low so that even smaller tasks usually took the whole day to accomplish. The rate of absenteeism was high and proved to be a constant cause of antagonism amongst the members. This in turn led to much friction and frequent complaints to the official leadership body, which, however, was in no position to remedy the situation due to the lack of authority and to the absence of regulative means.

NOTES:

[1] A few days before I left the field in May 1988, a fifth youth group was founded in the village. Its name was Koyus Youth and it was composed of members of the NAC movement. In fact, the member list included practically all the members of the New Apostolic Church, and the group only had elements on the surface (e.g. a written constitution) in common with the other youth groups. Basically, Koyus was the NAC in a new guise. The name derives from an exclamation someone made when he heard that the NAC was forming a youth group: "Koki yu lus", "Koki you will lose" the person said, Koki being the Tok Pisin name of the totem of one of the principal leaders of the movement. What the speaker meant by this was that, in his opinion, the New Apostolic Church was on the wrong track and that, sooner or later, they would be forced to admit their error.

[2] UNESCO defines youth as those between 13 and 25.

[3] "Yumi members bilong Wotal Youth yumi trassted man na meri. Yumi olgeta ol kristen people. Yumi wok wantaim wanbel long olgeta wok."

[4] *waki* is a ceremony in the context of the tamberan initiation.

[5] I say Wam-Urat and Urat-Wam because the two villages are bilingual. Whereas in Luwaite more Wam is spoken and Urat is the secondary language, the opposite is the case in Eimul.

[6] Especially during and after the coffee season patis were staged in at least one of the villages of the Maprik-Dreikikir District every Friday and Saturday. There was a distinct shortage of music bands in the area, and often groups from as far as Wewak were hired. The rate of hire was fixed at 100 to 120 Kina for one night, excluding transport and other expenses (e.g. kerosene for the generator).

[7] At the time, Gerry was thinking of building a new house in Warengeme. He did not want it built of bush material but had a so-called permanent house, a modern bungalow type of building, in mind instead.

CHAPTER TWENTY-ONE

PERVASIVE FACTIONALISM REVISITED

Before I go on to describe how Wotal finally broke down and how, on top of its ruins, the Miyeme Development Corporation was erected, I should like to draw a comparison between the two movements I have been dealing with over the last two sections, the millenarian and the Bisnis movements, and point to some of the features the two had in common and the ways in which they differed.

MODERNIZATION AND TRANSFORMATION

Firstly, both movements could be defined as being a result of, and a response to, the encapsulating system and change, which is why I have generically called them change movements. On the one hand, they both came into existence through the changes that the colonial system induced, on the other, they are both geared to the aim of bringing changes to the relationship between village society and the seemingly affluent world outside, each in its own way.

A second common feature is that they both display an ambiguous nature, by which I mean that they both have an explicit, or frontstage, and an implicit, or backstage, side to them. Explicitly they are both oriented towards development and the improvement of the standard of living in the village, implicitly, they constitute factions, political interest groups occupied with the distribution or reallocation of power in the village.

A third element in common is that they profess a collectivist ideology and appearance. They are designed on the basis of membership uniformity and undivided cooperation. The aspect of doing things together as a group, of collective action, is crucial to their existence and much value is attached to the element of sharing all duties and activities as well as profiting from the returns and benefits. The individual steps aside for the good of the collective. Outwardly they were fitted out with a conspicuously Western-style organizational structure. The New Apostolic Church had its clergy consisting of priests, deacons and subdeacons which stood vis-à-vis the congregation; the various layers of the Bisnis movement were established with a set of office holders (chairman, secretary, treasurer, etc.) who presided over the group of rank-and-file members. Officially, these were elected in a democratic procedure. Nominally, they held responsibility for the smooth running of the enterprise and enjoyed a certain degree of authority, but they had no power over the members. In both movements the members were officially enrolled on a membership list. Further, they had fixed time schedules. The NAC held services on Wednesdays and Sundays, Wotal YG had its regular work days and its Saturday fixtures for soccer and other sports. In both movements traditional elements of the social system were conspicuously absent. Neither of them relied on lineages, moieties, or kawas groups (*serengel pinandil*) as constituents of formal organization. Nor did the principle of exchange come into play in any form. If, in the end, the distribution of the movements in the village did display a pattern based on ward affiliation – the millenarian movement was quartered in Wohimbil and Warengeme, the Bisnis movement primarily in Wolhete and

Talkeneme – it was not by design but as a result of the political alignment in the village and had more to do with the implicit features of the movements. The NAC would have been overjoyed to include followers from Warengeme 2, just as Wotal or the WBG would have been prepared to accept members from Wohimbil. Precisely the fact that they did not contain any traditional elements was emphasized strongly by the leaders of each movement. It provided evidence and offered accountability in the public discourse on development that their enterprise was strictly orientated towards the komuniti ideal, and away from kastom.

A fourth feature in common, not by design but significant all the same, was that both movements drew their energy from, and relied heavily for intellectual and pragmatic input, on a very small group of leaders at the core. In the millenarian movement this source of intellectual energy was centred around the figures of Lawrence Peimel, Henry Auinda, Michael Mahate and also Nimbalme, the old Peli activist and, together with Peimel, the initiator of the NAC in Warengeme, whilst the other members of the clergy cared more for the official, ecclesiastical side of the NAC. The mainspring of the Bisnis movement was located at the core of Tilli Bros, around the figures of Alex and Gerry Anisi.

However, even if the two movements did share a number of features in common, they, of course, differed substantially in others. The most apparent of these refers to the fields of activity they occupied. Whereas the Bisnis movement was primarily involved in economic projects, the millenarian movement was manifestly engaged in religious pursuits. For both movements the establishment of komuniti was the ultimate goal. Admittedly, they differed in their views on the precise meaning of the concept but, overall, komuniti implied for both parties affluence and prosperity, transcending the rift between the village and the encapsulating society, social equality within the indigenous society, and the vanquishment of competition and eradication of conflict in the village. Even if there was a certain degree of compatibility in the formulation of goals, the two movements were completely at odds where the methods of attaining komuniti were concerned. They displayed diametrically opposed approaches to the task: the one could be called pragmatic, the other utopian. Whereas the Bisnis movement postulated that through economic development and innovation (e.g. through collective enterprise such as the Bisnis and youth groups) and through institutional change (promotion of government, law and education) the Wam would undergo transformation and would, in due course, become different cultural and moral beings, which would enable them to live together in peace and harmony, the millenarian movement saw it the other way round. For its followers, religious and moral conversion was the imperative requirement for a notably radical change to the conditions of existence. For them prosperity would result from moral and cultural change alone – the act of reversing Gai's cardinal mistake – for the bisnis followers prosperity would lead to moral change. *In other words, for the advocates of bisnis, modernization would lead to transformation, for the millenarianists, transformation would result in (instant) modernization.*

It will come as no surprise to hear that they were also at odds with each other as to who possessed the "right way". The millenarianists claimed it for themselves and condemned

the ventures of the other side, especially Wotal's "komuniti work" scheme. They believed it was wrong to take money from a fellow villager and maintained that, in doing this, the youth group was actually practising kastom in a new guise. The bisnis leaders for their part accused the New Apostolic Church of leading people astray with a delusive ideology and factually behaving like their forefathers did when they were confronted for the first time with the might and wealth of the white man. This, they continued, was one of the real reasons why the Wam had made so little progress until now.

A pivotal issue on which the two movements differed markedly concerns the question of internal cohesion and unity, and the incidence of strife and dissent within each camp. While quarrels and altercations were frequent in the Bisnis movement, especially in connection with Wotal Youth, and persistently posed a threat to the whole enterprise, the millenarian movement remained conspicuously free of dissension, with a few exceptions, and was able to uphold the appearance of unity and concordance. The NAC leaders tried to exploit this configuration to their benefit, and with some success. They frequently referred to the absence of contention in their organization in public meetings as a sign that theirs was the right church, and used it as an item of evidence to show that they were on the correct course towards komuniti, whereas the conduct of the followers of the Bisnis movement – the majority of whom belonged to the Catholic Church – clearly indicated that they were still deeply enmeshed in kastom. It was a persuasive argument but, of course, only half the truth. More significant for the internal cohesion of the two movements was that in fact they substantially differed in terms of the type of action they were engaged in. As a consequence, they faced different kinds of demands on the cohesive capacity of their group.

The action pattern of the millenarian movement was of such a design that, in actual fact, its cohesiveness was never put to the test. NAC action was never directed towards taking immediate effect on the course of events and towards moulding the process of development of their own accord. They did not have to design projects of their own and devise methods of implementing them; they did not face the problem of having to attain consensus on the aim of their organization, and then organize and initiate action and, above all, sustain the rate of activities; nor did they have to come to terms with the difficulty of finding a solution to the distribution of the returns of their activity. The millenarian movement did not have to operate as an action group but only as an assembly of like-minded individuals. This also meant that they never had to take stock of the efficacy of their movement, evaluate what they had achieved so far, or consider what were their shortcomings.

The millenarianists convened for church services, they entertained a uniform set of beliefs and shared time in worship together, but they did not have to accomplish a joint task which was likely to place restrictions on the autonomy of the individual and which demanded from every member an input of resources with, possibly, a curtailment of personal interests. Although it placed much emphasis on the issue of togetherness and unity, the NAC retained the individuality of each member. A pointer in this direction is, for instance, the statement of one of the leaders during the NAC seminar where he rejects the

present form of development efforts because they do not take the individual into consideration, in contrast to the NAC's vision of Christian development.

Nor was the question of success or failure of their mission – the arrival of the millennium – immediately dependent on their performance as a group. The responsibility of effecting change was laid in the hands of outside agencies, such as the Chief Apostle, Bernard Narokobi, and the Melanesian Alliance Party. As a collective they could not influence the events to come, it was up to the individual whether he proved himself worthy of redemption or whether he was foolhardy enough to jeopardize his chances of salvation through indulging in deviant kastom behaviour.

The millenarian movement drew strength from the persuasiveness of its ideology and the act of sharing belief and ritual together in the face of adversity in the village. However, there was very little danger of fission because there was factually no issue at stake from which dissent could have resulted and conflict erupted.

The Bisnis movement in general, and Wotal YG in specific, was different in these respects. It had no binding ideology under which its members could assemble. Bisnis and development were catchwords which, however, had no unifying strength. On the contrary, bisnis had a very competitive flavour to it in view of the significance income and money has in the village today.

At the same time, however, the Bisnis movement was action orientated. Their approach towards promoting development and attaining komuniti was based on taking matters into their own hands and initiating joint enterprises. This placed quite different demands on the organizational proficiency of the group. This becomes markedly evident in the case of Wotal YG. Being task orientated, it had to be fitted out with an organizational form suitable for the ventures it had in mind. It demanded a certain degree of consensus on aims and methods, it needed an authority structure in order to implement and to sustain activities, furthermore, it demanded a sense of corporateness and collective spirit. These qualifications, in turn, had implications for the individual members of the group: they had to subordinate themselves to the dictates of the enterprise, they were expected to accept the decisions of the people on the board of management – of persons, be it noted, who otherwise were their equals – they had to forfeit individual interests for the benefit of the collective, and had to take restrictions of their personal autonomy into account. One could say that, to a certain extent, Wotal resembled a corporate group. More to the point, it was expected to function as such but, at the same time, it lacked the necessary foundations that would have allowed it to act as a corporate unit.

Wotal YG met some of the criteria of corporateness (Keesing 1975:17). It found its symbolic expression in its name, Wotal, which was backed by the existence of an official membership list and the two constitutional papers. It acted together on various occasions and in different contexts (sports, meetings, komuniti work). It shared common estate in the form of the youth group funds deposited in a bank in Wewak, and it acted towards outsiders (eg. contractors, bank, village officials, NYMP) as a single juridical personality, and the group was accountable and responsible for the doings of its members. However,

Wotal failed to meet the two most vital criteria of corporateness: its members did not derive their main identity from Wotal, nor was their primary loyalty towards the group.

For a majority of members, including those in the leadership body, commitment did not go beyond the stage of verbal acclamation during meetings and discussions. If they did feel a sense of loyalty, it was focused on the persons of Alex and, to a lesser extent, on Gerry, but not towards each other. These two men alone commanded the necessary status and capacity to motivate the others to action, but no one else in the group, least of all the appointed leaders, were in a position to give orders and direct activities. There was not only a perceptible rift between the members of Wolhete and Talkeneme but also divisions within each ward itself, especially in Wolhete. These rifts were not necessarily overtly antagonistic, although strife did break through from time to time, but relations were taut and strained enough to impede productive and durable cooperation between the various segments. A deeper sense of unity and shared identity became perceptible only in the face of opposition towards outside challenge, either from another village or another ward. Such occasions were provided by the soccer championship between the various youth groups of the area. Here, the external challenge covered up the differences within Warengeme 2 and created a strong, but very short-lived, feeling of togetherness.

Wotal, on the whole, remained a very artificial assemblage. The youth group did not really create a new organization but merely provided the framework for a new set of individual roles. The members were expected to shed their social identities and interact as equal and neutral members of the youth group, and no longer on the basis of the traditional day-to-day code of interaction. Behaviour and interaction within the youth group were expected to meet the standards of the envisioned and proclaimed komuniti ideal with its code of cooperation, harmony and selflessness.

To create and support this feeling of corporateness, the youth group relied heavily on its formal organizational framework, such as the written constitution which laid down youth group policy, the official leadership body consisting of the various office-holding positions, and the corpus of rules which regulated youth activities and provided the blueprint for the mode of interaction, and which dictated the appropriate means for solving internal conflicts and problems. Due to their artificiality, these frames, however, in no way provided instruments capable of holding the youth group together. There existed a clear discrepancy between the formal requirements the youth group imposed on itself, i.e. the obligation to behave according to the standards laid down by the constitution or to accept the decisions made by the appointed leaders, and the way the members actually acted and interacted.

In their attempt to establish komuniti the villagers created new organizational moulds based on the rationale, it appears, that the possession of new forms would ensure a new cast. A configuration becomes discernible which reflects an attitude of "having-is-being": because they have a modern organization they themselves are now modern. Traditional elements and principles of organization were absent from Wotal, instead it boasted a corpus of Western-styled, modern, elements. It had a written constitution, a chairman, a secretary and other office-holders, there was a committee, they held general meetings

where motions were passed and votes were cast on various points of the written agenda. During meetings, members addressed each other not by name, but as "master chairman", or "secretary", "treasurer" and the like. The existence of the formal requirements of modernity, in a sense, conjured up the delusion that they had established the reality which the form implied. The novel institutional forms provided the parameter and dictated the standards by which, in frontstage situations, the performance of the group and the conduct of each single member was rated. But in actual fact reality fell far short of expectations, since the traditional cultural habitus with its emphasis on individual autonomy, competition and reciprocity was still operative. The mould was, thus, not compatible with the cast. The idea of the collective, of shared inputs and shared returns, remained an empty signifier, an ideological and rhetorical phrase. Corporateness and unity was only experienced in the face of opposition and when the feeling of shared adversity was stronger than the dissent and internal competition between each other.

However, at the same time, it was by the standards of the formal framework that the individual members and various subgroups judged each other's behaviour in, and commitment towards, the group and, accordingly, filed official complaints. One of the most common accusations which members raised against each other was that by their behaviour they were jeopardizing, or even disrupting, komuniti and, thereby, also severely impeding the process of development in the village.

Wotal purported to be a modern collective organization but by nature it remained very much more a faction, or interest group. There can be no doubt about the sincerity of both the leaders' and the members' aims and intentions but the outer, constitutional form and the habitus of the members were just not compatible. The group derived its existence from, and owed its sustainment to, the input and influence of a few individuals, especially Alex. He formed the group, selected its official leaders, devised its policies and generally made the enterprise tick. As time progressed and the first problems emerged, it became evident that nothing went without Alex, but as long as he was focused on Wotal, the group held together. Gerry for his part was more bisnis oriented and not so intent on building up a following. All the same, after the plan to purchase a set of instruments emerged, Wotal went into a dormant state.

Before I go on to recount how Wotal finally folded up, I must insert a brief intermezzo and give a picture of Alex's further career, since Wotal's fate is very much linked up with it.

ANISI GOES TO TOWN

In 1986 Alex applied for and was granted a further posting, this time to the Community School of Aresili. It is rather uncommon, and, apparently, against educational policy, for a teacher to receive a posting to the school of his home area. The fact that he did so all the same is an indication that he knew the right people in the provincial administration. He had never made a secret of his plans for a political career, and it was clear that he would not remain a teacher forever. For 1987, national elections were scheduled in Papua New

Guinea and, shortly afterwards, provincial elections in the East Sepik Province. Towards the end of 1986 Alex quitted his job as a teacher and became engaged in politics.

Jack Wangu, ex-policeman and the eldest son of the earlier bisnis leader Wangu Wangu, had decided to stand for election in the National Elections for the Melanesian Alliance Party in the Dreikikir Ambunti Open Electorate, and Alex became his so-called campaign manager for the Wam villages. He was not only well known to the Wam villagers through his work as a teacher but also through his role in Wotal and the AYSA, both of which he had engineered from behind the scenes. Alex, for his part, was supported by a number of helpers from his closer network in Warengeme, mainly Norbert and two of his *meinheil* from Wolhete, Donald Wagehei and Stanley Wasseki. Early in 1987, and still during the initial phase of the election campaign, Jack Wangu was involved in a road accident which ruled out a further candidacy on his part. Without further ado, it was decided that Alex, being the most prominent Wam representative, should take his place. With the help of his supporters he led a convincing campaign. He failed to win the seat but, nevertheless, he achieved a good result by coming fourth, barely 400 votes behind the winner.[1]

Encouraged by his good result, Alex decided to contest the provincial elections scheduled for September the same year. The 2520 votes he had collected were an indication that he had won the large majority of Wam votes. Naturally, the configuration was different in the provincial elections because the electorate was smaller (Wam-Urat Constituency) and there were more indigenous candidates. Still he was optimistic because, being the official Wam candidate of the Melanesian Alliance Party, he could reckon with a large number of votes from the New Apostolic Church camp. It might appear contradictory that the NAC, otherwise opposed to the Bisnis movement and Tilli Bros, suddenly became Alex's supporters in the village, but this is an indication of the nature of pervasive factionalism. In the end, Alex won the election by a safe margin. Most significantly he was streets ahead of his closest rival, Kani Happali, who is also from Warengeme and was the sitting member and had held the position of Speaker of Parliament during the last parliamentary term. Alex Anisi not only won the seat, he also became Minister of Education in the new Melanesian Alliance government headed by Bruce Samban. He was the first governmental minister ever from the Wam area.[2] Thus, he had accomplished what he had aimed for – a career in politics – within a span of barely three years.

On the occasion of the election campaign, pervasive factionalism in Warengeme surfaced and became apparent. The old factional boundaries were broken up and the pattern of alliance was reshuffled. The reader will recall that there exists a basic opposition between the two village halves, Warengeme 1 and Warengeme 2. This opposition is not necessarily perceptible under normal circumstances. It is only at times of heightened tension that the rift becomes visible and animosity is liable to break through. Otherwise, differences are often covered by a mask of friendliness and politeness. In spite of this latent opposition, I must add that numerous genuinely amicable relations exist between people from the two village halves. As I briefly described earlier on, Warengeme 2 forms a united, albeit volatile, faction in the form of the laminated Bisnis movement centred on

Tilli Bros. Warengeme 1 divides into two factions. The one is the millenarian movement, the other I have termed the government faction. The latter group splits into three subfactions: the first consisting of a number of ardent followers of the Catholic Church, the second refers to the village magistrate Hiale and his small group of followers, the third I have called the Womsok group because its principal figures are recruited from the Womsok lineage (line P1) of Wohimbil. These central figures refer to the sons of the earlier bigman of Wohimbil, called Happali. They include the councillor Gista, the former Member of Parliament Kani, the leading bisnis man of Warengeme 1 John Embini, and the youngest of the sibling group, a man called Benjamin Tembule.

The four siblings do not form a tightly-knit group. Each one has his own field of activity and they conduct their affairs more or less separately. Neither do they form a residential unit. They are, however, united in their resentment towards both the Bisnis movement and the New Apostolic Church. All are conspicuous figures in their own way, oriented towards modernity and change. The three elder siblings ranked as modern bigmen in the village, whereas the fourth and youngest brother was in the process of trying to find his place next to his more prominent siblings. For the moment he had found his own niche of assertion within the Catholic Church, where he functioned as a youth leader and pastoral worker, but it was quite evident that he was aiming for more. However, he was facing a problem similar to that confronting Andrew Anisi in the Bisnis movement, in the sense that the pathways to prominence were already occupied by more influential siblings (a notable difference was that, unlike Andrew, Benjamin was the youngest of his sibling group). Despite his junior status he was a vociferous speaker in public meetings, and outspoken, too outspoken for many of the villagers, who resented his know-all manner.

The three large factions, the Bisnis, the millenarian movement, and the government faction, all stand in a more or less antagonistic relation to each other, but to varying degrees. The Bisnis and millenarian movements were opposed to each other in ideology and where the correct way to development and change was concerned. But opposition did not result in open confrontation. They merely regarded each other with slight contempt. The millenarianists looked upon those of Warengeme 2 as kastom-mongers and sinners, those of the Bisnis movement regarded their opposites as utopians and cranks, more as a nuisance than a threat. Typical of the pattern of pervasive factionalism, there existed links between the two movements, in the sense that some members of Tilli Bros, such as Alex's *anheil* Landime, were members of the New Apostolic Church. At one stage, Andrew also joined the NAC briefly, which one could interpret as an attempt on his part to set himself apart from Alex who, officially, belonged to the Catholic Church.

The rapport between the Bisnis movement and the government faction was split, be it noted always on the basis of the fundamental opposition between Warengeme 1 and 2. The Bisnis movement was highly antagonistic towards the Womsok group whence came Alex's main political rivals, whereas the relationship to the Catholic section was more neutral. The large majority of Warengeme 2 belonged to the Catholic Church. Hiale, the village magistrate and "head" of the third subfaction, however, was a frequent visitor in Warengeme 2 and a follower of Wotal and the Bisnis movement. The rapport was based on

a close, but utilitarian, relationship between Alex and Hiale. Others in Warengeme 2 were not necessarily so enthusiastic about Hiale's involvement but they tolerated his frequent presence, out of respect for Alex. Apart from his role as magistrate, Hiale was rated as one of the last customary bigmen in the village. Hiale was not only knowledgeable in terms of kastom and the tamberan – many also believed him to have sorcery knowledge – he had also recognized the signs of the time and realized that the days of kastom were rapidly coming to a close and that the future lay in Western-type knowledge and literacy, resources that, given his age (he was in his fifties), he no longer had access to. He retained a high degree of influence, however, by becoming a close associate of Alex in his rise to prominence and acted as what one could call Alex's mentor in village affairs. In the course of time, Hiale became a habitual participant in Wotal's activities and a frequent visitor in Tillenge. Alex, for his part, was able to profit from Hiale's experience and knowledge. He also received advice and guidance from his two *anheil* Landime and Mani but, given the fact that Hiale was more distantly related to him than his two senior cross kin, he enjoyed more leeway and freedom of expression with Hiale.

The relationship between the two Warengeme 1 factions, the millenarian movement and the government faction, was antagonistic throughout. For the millenarians the three government subfactions harboured and represented the encapsulating system entirely. The Catholic Church, the village magistrate, the councillor and other politicians – notably those who did not belong to the Melanesian Alliance Party – were regarded as the henchmen of the oppressive post-colonial order. They were trying to exploit their positions to their own benefit and thereby promoting kastom and inequality, and were the cause of all failings in village development. Whereas between other factions the adversity was often latent and not perceptible, here antagonism was openly displayed and frequently led to verbal confrontations, especially during public meetings. Nevertheless, on the individual level, friendly relations also existed between members of the opposed sections, which again is a typical feature of pervasive factionalism. Factions do not constitute clear-cut, closed groups but, rather, overlapping networks. Contention is at its highest density at the cores of the factions, and much of the conflict is restricted to the protagonists at the centre of each faction whilst the followers, when not drawn into the conflict through allegiance to the factional leaders, may display a normal rapport with each other.

The campaign leading up to the 1987 provincial elections altered the pattern of factional alliance in the village profoundly. The decisive move that initiated this change was the New Apostolic Church's decision to support Alex in his contest against Kani Happali. There were two aspects to this move: firstly, Alex being the official Melanesian Alliance candidate, they believed a victory for their party in the Wam Urat area, and in the province, would precipitate the rise of the MA to power in general, thus bringing the impending millennium a step closer; secondly, their support for Alex provided a chance of toppling Kani Happali from his position and thus weakening the government faction in general, and the Womsok group in particular. This would deprive them of their basis for continually denigrating and ridiculing the New Apostolics.

In accordance with the overall Wam pattern of agnatic conflict and sibling rivalry, some of the most ardent opponents of Kani and his followers within the NAC were from the same Womsok lineage. Amongst others, this included Lawrence Peimel, one of the main figures in the millenarian movement. Peimel became one of Alex's active campaign managers. This new alliance shook up the alignment pattern in the village: It washed away, at least temporarily, the old division between Warengeme 1 and 2. It also meant that the NACs and the Catholics from Warengeme 2 suddenly found themselves no longer confronting each other, but side by side. The NAC also found itself indirectly aligned with one of their old enemies, the magistrate Hiale who belonged to Alex's following. Hiale was facing a problem of allegiance here because he was not only a supporter of Alex, he was also on very close and friendly terms with Kani Happali, being his *meinheil*. According to his own testimony, he tried to retain a low profile in the campaign in order not to jeopardize the relations on both sides. Likewise, the Catholics from Warengeme 1 remained neutral in the contest. Although they too favoured a change and were inclined to support Alex, the presence of the NAC in the campaign coalition hindered them from openly supporting him.

In this setting of shifting alliances, one more link that was created is evidence of the pervasiveness of Warengeme factionalism. This refers to the defection of Benjamin Tembule from his brother Kani's to Alex's camp. Again we can take it as an indication of sibling rivalry and antagonism within Wam society. Like Peimel, Benjamin became one of Alex's campaign managers. He saw the coming election as an opportunity to step out of his elder brothers' shadow and establish a position for himself which freed him from the stigma of being only the *nauwie somal*, i.e. younger brother, of more influential men. "Mi laik resis wantaim em", I wanted to challenge him (meaning Kani), was how he formulated his motive.

Tembule's switch to the other side lent Alex's coalition an even more controversial configuration since, otherwise, Tembule, in his role as a Catholic pastoral worker and youth leader, was not only a radical opponent of the NAC, at least in its millenarian form, but was also highly unpopular in Warengeme 2 in general, and among the youth there in particular, owing to his self-approbation in development and spiritual matters. Now, the campaign had brought all these opponents together on one side. Thus, the Womsok group around Kani, Gista, and Embini found themselves suddenly isolated. As I was told later, Kani did not gain more than thirty votes in Warengeme, in fact distinctly fewer than in the neighbouring village of Selni, where the Womsok group overall have very strong matrilateral ties and where Kani's wife comes from.

Alex's campaign coalition was an alliance of adversaries who joined forces under the leadership of a (potential) bigman. The unifying factor was their antagonism towards a common rival, which surpassed their own opposition towards each other in intensity. Within its own field, each faction reckoned that they could make Alex's success their own gain. Otherwise the various factional parties had few interests in common. Antagonism alone is, naturally, not a sound basis for a durable allegiance. Support and cohesion can only be maintained as long as antagonism persists and there is a rival to target one's

opposition on. As soon as the opposition is vanquished, the alliance is liable to break apart, with the single segments regrouping along old, or at least different, lines of allegiance and antagonism. This, too, was the case in Warengeme.

After Alex won the election the coalition broke apart and the old oppositions between Warengeme 1 and 2, and Catholics and New Apostolics resurfaced. Alex explicitly dissociated himself from the NAC and emphatically absolved himself of any suspicion of being in sympathy with the millenarian ideology. However, as we shall see below, his rise to power also had repercussions on his position within his home faction, the Bisnis movement.

During the months leading up to the elections and during the campaign itself the NAC proliferated and gained in influence in the village. There were a number of reasons for this, one of them certainly being their allegiance with Alex and their participation in the successful campaign. His success in the elections also meant a victory for them over their old adversaries from the Womsok group. For once, they were in a position of strength whereas their opponents were on the losing side. The millenarianists interpreted their success in a broader sense than merely a victory over Gista, Kani and Embini. They celebrated the event as a triumph of the "new order", the new contract, i.e. the New Apostolic Church, over "the old order", the old contract, to which they also counted the village magistrate and the Catholic Church, in other words, parties with which they had been allied shortly before. Their success heralded the beginning of a new phase. With the backing of Alex, the New Apostolics believed they were in a position where they could challenge those people in the village who had for years criticized and ridiculed them for their belief in the imminent arrival of the millennium.

In the immediate phase after the elections, rumours emerged and began to proliferate in the village saying that Gista, Kani and Embini had been involved in a number of recent deaths in the village and that they were planning to eliminate more people, all of them from the NAC, in the near future through sorcery. Some of these rumours were new, others of older origin. The exact source of the rumours was unclear at the time but they appeared to have originated somewhere within the circle of the New Apostolic Church and its following. It looked very much as if the millenialists were trying to capitalize on the advantage the elections had brought them and were dragging their old opponents into disrepute. However, the strategy backfired, not least because it soon became evident that Alex was not prepared to give them any backing. The three Womsok brothers called a mediation in order to clear themselves of all suspicion and, together with the other sections from the government faction, they took the opportunity to revenge themselves on the NAC and restore the old order of power and influence in Warengeme 1.

Following this interlude on village politics in general, I return to the scene within the Bisnis movement and the fate of Wotal. After he became engaged in the political field in the phase leading up to the national and provincial elections, Alex also changed his orientation within the village and had little time left for the struggling youth group. Nor, actually, did he directly need the youth group any more. He had made his name and established the basis of his status by forming and shaping the youth group in the first place.

Since he had never belonged to the official leadership body of the group but only acted as their advisor and benefactor, the youth group's shortcomings were not ascribed to him. In terms of accountability, Alex had a clean record. He took most of the credit, and enjoyed the status, of having founded Wotal but did not have to account for its failures. These were passed on to others.

On the Wotal front matters "slept" until the end of 1986. Then the youth group woke up again. It was roused by the man called Maurice Natile together with Andrew Anisi, Alex's elder brother and latent opponent. Maurice was an agnate of both Alex and Andrew, and a *krabei* to Gerry through their common mother Wanengwa (cf. diagram 12, p. 252). Like his agnates, Maurice belonged to the segment of young educated villagers. He was a member of Wotal and, although his voice had always been audible in youth affairs, he did not belong to the body of official leaders. He too was a schemer, full of new bisnis ideas and possible projects. He was on good terms with Gerry and Andrew, while his relationship with Alex was more strained. Here again the meaningful pattern of sibling rivalry and antagonism emerges, according to the maxim "the opponent of my opponent is my ally".

Together with Andrew, Maurice staged a veritable coup d'êtat in Wotal. During the chairman's absence they removed the official leadership body from office and installed a new board of management. Maurice himself became the new chairman. All records, documents and assets were handed over to the new leadership. Frontstage, they justified their action with the claim that the youth affairs in the village had been neglected recently and that the previous leaders were more intent on promoting their own interests than catering for the needs of the village youth. They were no longer working towards development and komuniti but displaying "mitasolism" behaviour and, thus, fostering kastom. Officially the reprimands were directed towards the official leaders of Wotal, but they also contained an audible reproach against the men of Tilli Bros in general, and Alex in specific. Gerry was in Wewak at the time and Alex, who was in the village but occupied otherwise, took no action. On a later occasion, and when he was in a much stronger position, Alex gave his version of the event leading to the coup. He then claimed that he himself had removed Perite from office and made Maurice the new chairman of Wotal. The occasion was Wotal's final meeting, during which Andrew and Maurice were called upon to account for the youth group funds and after which the youth group broke up (cf. below p. 411-420).

The primary aim of the new youth group – still called Wotal – was the purchase of the promised set of instruments through which Maurice and Andrew hoped to rally enthusiasm and receive the support of its members. Shortly after the coup, however, Maurice left Warengeme for Wewak and then for Kieta, officially on a mission to buy the set of musical instruments. With Gerry's consent, he took Wotal's funds with him. He stayed away for more than ten months and no one knew his exact whereabouts. During his absence nothing happened in the youth group. The "komuniti work" scheme was not resumed, nor were sports events reactivated. Wotal went back into its quiescent state whilst the villagers prepared for the coming elections.

I returned to Warengeme in October 1987. At first sight, little had changed in the village. It was only after I had settled down again that the changes became more apparent. A number of prominent people had died but, overall, Warengeme had grown in population. There had been numerous residential moves, old hamlets had been deserted, new ones built. Moreover, there had been changes on the political front and in the field of the change movements. The New Apostolic Church had proliferated and gained in influence, largely at the cost of the Catholic Church. The SSEC also had received a boost, and its number of adherents had grown markedly. The Bisnis movement still existed. The villagers sold their coffee through the WBG, and Tilli Bros was still engaged in its commercial activities and was brooding over new ventures. Wotal still existed, on paper at least, but was dormant at the time. On the whole, however, it appeared that the movement as such had rather come apart. The scene was more fragmented and there were no plans for, and less mention of, collective bisnis enterprise on the previous scale.

The more striking changes resulted from Alex's victory in the elections, and his subsequent nomination as Minister of Education. His success had given the NAC a boost and, at the same time, it had curtailed the influence and standing of the government faction of Warengeme 1, at least momentarily. Especially the Womsok group was on the defensive. What was even more significant, however, was that his success had changed Alex himself and altered his approach to, and manner of behaving with, his fellow villagers. Although he had always been a conspicuous figure, previously he had always succeeded in playing down his own prominence and stagemanaging the impression that everything he was doing was for the sake of the village, and that, basically, he was no different from his fellow villagers. This had radically changed. He spent a lot of his time in Wewak, but when he was in the village, he now made it abundantly evident what a bigman he had become, and he clearly tried to dissociate himself from the others and the village life-style, both through his appearance and conduct.

For instance, he was driven to the village, and collected again, by a government vehicle with his own driver. His arrival in the village resembled a veritable reception and the people would greet him as if he had been absent for years. His clothing had changed, he now wore long trousers, shoes and a fashionable T-shirt, instead of the usual shorts and singlet. When he came home for a weekend he often brought with him frozen food from one of the supermarkets in Wewak or Maprik for his four-year-old son, food which was normally well beyond the means of the average villagers and was otherwise reserved for very special occasions. When the villagers brought him food from their gardens as a token of respect and allegiance – since he had no time to establish a garden of his own, the people said, they had to support him where they could – he would accept it more or less with indifference and a thanks-put-it-over-there-attitude which was completely uncustomary for a Wam receiving a gift of food. Normally, a presentation of food elicited feigned embarrassment on the part of the receiver. When urgently needed (a hospital case, collecting a pig from a neighbouring village, etc.), he would generously place both the vehicle and the driver at the villagers' disposal. There was nothing wrong in this, in principle, it was the way he did it that was irritating.

When he was at home he would receive people on the veranda of his house to hear their complaints or problems and to give counsel. He still joked with the people but they no longer necessarily joked with him. When discussing change and development he no longer addressed the issues with a we-have-to-do approach but all the more with you-must-do-and-I-will-see-what-I-can-do-for-you attitude. Instead of making suggestions or giving advice he now more frequently issued orders. When he spoke about his work it was often with an air of supercilious superiority. Many of the issues he addressed were really beyond his listeners. Also, his Tok Pisin had become even more anglicized. He not only used single English terms but more frequently inserted whole English phrases, especially when talking about the technicalities of the office he held. He talked about parliamentary procedures, financial plans involving millions of Kina, budget cuts, the policies of higher education, important conferences with ministers from other provinces, plans to attend meetings in Port Moresby, and even scheduled visits abroad. He no longer discussed matters with his fellow villagers, he told them about things. In a similar way, he often no longer referred to yumi Wam (we, the Wam) but talked about pipel bilong mi (my people). In the attempt to curb people's expectations in relation to what he could achieve in Wewak, he would frequently remind them that he was now responsible for the people of the whole province and no longer only for the village: "It's true, I'm your member," he would say, "but, remember, I'm the minister for the whole province." What also was highly untypical for an average Wam man was that, when he was tired, he was liable to tell his visitors that they should leave now because he needed a rest and wanted to be alone with his wife and child.

No doubt the villagers admired Alex and respected him but, in a sense, he had risen to a different sphere of social reality and become alienated from the village habitus. He still enjoyed unrestricted loyalty and support from his closer entourage, such as his two *meinheil* who had functioned as his campaign managers earlier on, or his kawas and his wife who still looked after Baru when Alex was away in Wewak, but through his conspicuous and meteoric rise he had also estranged himself from the other segments of the village.

The fact that Alex had attained bigman status was also reflected in the manner in which he approached the village seniors, such as his two *anheil* Landime and Mani. He no longer paid them special respect as he had done earlier. This does not mean that he showed disrespect for them in any way but merely that he now met them on an equal footing. His position as the most prominent man in the village levelled out the difference in age and kin status. At the same time he treated those who had until a short time before been his equals with a distinct tone of superiority.

Another feature of his altered status position was his manifest sensitivity towards issues of sorcery, which indicates that he himself was well aware of his sudden rise in prominence. He was convinced that many people would now try to "do him in", and he took precautions which, earlier on, he had never done. For instance, he installed on the veranda of his house a bright Coleman lamp which he left burning nearly all night. One evening there was a group of people sitting on the veranda. Alex was sitting in a chair next

to the balustrade. The Coleman lamp was on, brightly illuminating the veranda but plunging the outside into impenetrable darkness. Suddenly, out of the blackness, a voice called Alex. Hearing his name, Alex jumped up out of his chair and dashed for the door of one of the rooms. From there he called "who is it?" It turned out to be Saas, the chairman of the Bisnis group who had brought him a present of sago. Still shaken, Alex came out again and reproached Saas for creeping up on him like that, claiming that that was the way sorcerers approached their victims, and that he now had to be very careful in his movements. There was no more to the episode but it shows how sensitive Alex had become to the threat of sorcery.

Undoubtedly Alex was assigned and enjoyed bigman status. This became evident from the way in which the people approached and conversed with him and from the way his word carried weight, in the sense that his account and interpretation of issues that were under debate acquired a high degree of factuality. What he said was liable to become fact. In this respect he very much resembled a traditional bigman. In other aspects he differed from the model.

One of the main points of difference concerns the channels of status acquisition. Alex had attained his present standing exclusively through the means provided by the encapsulating system. In no way had he ever excelled in, or even participated in, the traditional system. Nominally he had a *pinandil*, but he had never entered into ritual exchange with him. On the one hand, his rise to prominence was based on his achievements within the Bisnis movement in general, and Wotal in particular, on the other it was fuelled by the villagers' expectations that he would be able to lead them to a higher standard, and a different form, of village existence through his capacity as a mediator between the two worlds. It was only after he had become a government minister that it gradually became evident that all that had happened was that Alex himself had heaved himself up from the lowliness of village society whilst the others had remained behind. He thus unmasked himself as being basically no different from all the other politicians and representatives of the encapsulating system whom the villagers had experienced until then. This was the impression formed by many villagers who did not belong to his immediate entourage. It was an attitude voiced with increasing explicitness by the leaders of the millenarian movement, who had lent Alex broad support during his election campaign, especially after he had publicly rebuked them – although not the NAC as a church itself – for leading the people astray with delusive ideologies and false hopes. This happened on the occasion of a large MA rally Alex organized in the village to celebrate his victory and his nomination as minister a few months after the elections (see plate 27).

The traditional code of competitive equality provided for a certain degree of latitude in the system, in the sense that it allowed certain men to become more equal than others. This was acceptable to, and compatible with, the code, as long as a bigman did not place himself above his fellow men in absolute terms but remained within the system, and as long as there was a backflow of benefits and marginal prestige to the other participants. Men who threatened to abuse their position and power were liable to lose the support of their followers and, ultimately, face the sanctions of society, which were encoded in the

idiom of sorcery. Either they were threatened with, or accused of, sorcery. Bigman status was not a standing that, once achieved, was held forever. It had a much more procedural character. A bigman had to prove himself again and again, he had to perform according to his rank and he had to live up to the expectations of his followers. The villagers, for their part, monitored his action and assessed his performance continually. A point which goes without saying, but which is critical all the same, is that they commanded the cultural gauges by which a bigman's performance was measured. Amongst others, these included, for instance, the number of kawas he competed with, the number of pigs exchanged during a *pinandil* feast, the quality of ornaments during a singsing, the number of participants from neighbouring groups present during a festivity, the margin by which he could surpass his opponents, or the manner in which he was able to put his rhetorical skills to use.

In the case of the modern bigman-politician as represented by Alex, on the other hand, it was difficult to evaluate performance. No one in the village possessed the instrumentarium, or was in a position, to judge Alex's abilities and achievements as a government minister. All they ever heard about his activities and the effectiveness of his actions, both in parliament and in the cabinet, was contained in the reports that came from Alex himself. They had no means of monitoring, or measuring, his performances in a manner comparable to that of the traditional system. On the other hand, however, the villagers' expectations as to what he could achieve for the benefit of Warengeme were so high they were difficult, if not even impossible, to meet. They believed, or at least hoped, that Alex would be able to guide the government's attention to their area and that government money and projects would flow into the Wam area, that a new and better road would be built, that the cash crop industry would receive a boost, or, possibly, even that the long planned High School for the Dreikikir area would now be built on the grounds of the present Community School. Naturally, Alex could try to lobby for these opportunities but whether he would succeed was quite a different matter. As things were, the villagers enjoyed little benefit and no immediate returns from their bigman's prominence, except the pride of being able to boast that their village had produced a minister. But clearly this was not enough to sustain their unconditional support. Alex had little chance to prove himself and to allow the returns of his position to flow back into the social system of the village as traditional bigmen did. In a sense, the villagers felt that they were not getting back what they had put into the venture of "making" Alex the bigman he was. The ideal of komuniti was no nearer than before, Wotal was inactive and, with it, much of the optimistic spirit of collective enterprise had ebbed away. The prospects of receiving government funds for the development of the Wam area were meagre, and, for the followers of the New Apostolic Church, the Melanesian Alliance Party's victory in the elections had proved a disappointment. All they actually witnessed were superficial manifestations of Alex's new status, the car, the food, his mode of speech and the way he conversed with his nominal equals. In other words, what became evident was that the code of equality was being eroded and replaced by a relationship that had a distinct note of hierarchy about it.

WOTAL'S BREAKDOWN

Let us return to Wotal and the Bisnis movement. There the limbo continued, whereas it appeared that other youth groups in the area were going ahead. Einde Youth, the group from Hambini 3, for instance, had cleared a large tract of land near their village where they were planning to establish a cacao plantation. In Warengeme, and to the disappointment of the members of Wotal, nothing was happening. At this point, in November 1987, Tilli Bros stepped back onto the scene. Various meetings were held to discuss what Tilli Bros could do to regenerate the Bisnis movement. Alex was absent at these meetings, Gerry participated in some of them. In view of the inactivity of Wotal, suggestions were made to the various subgroups from Wolhete, Talkeneme and Warengeme that they should officially join Tilli Bros and become shareholders in the enterprise and then reactivate some of the old, and launch some new, projects in the name of Tilli Bros. Delegations from the different sections of the village came to listen to what the people of Tilli Bros had to offer but, in the end, they all declined the invitation to join the enterprise. This is both surprising and significant, when one considers that the organization had the backing of the most prominent man of the village. The main reason given by the representatives of the other sections of the village for their negative reply was that Tilli Bros was a famili grup, i.e. a closely-knit organization based on kin ties, and that newcomers to the group would remain stigmatized as outsiders and second-rate members, even if Tilli Bros did boast a modern board of management and even if its elected leaders did not directly belong to the Tillenge segment. What they were also implicitly suggesting was that they were no longer prepared to support a bigman and his faction in their endeavours to extend their influence and power even further when there were no returns to be expected from their efforts. It appeared very much that through his election and nomination to office, and through his ostentatious conduct in the village, Alex had overstepped the mark and overstrained the code of equality. The people reacted by withdrawing their trust and support from him. It was open to him to regain lost ground but it would mean proving himself again and performing in such a manner as to win back those whose allegiance and faith he had lost. What it also meant, at least in the interim, was that a power vacuum developed in Warengeme 2 which others tried to step into and fill.

Maurice Natile and Andrew Anisi were two of the candidates that tried to fill the void Alex had left. Around the end of November 1987 Maurice returned from Kieta after an absence of more than 10 months. His return was noted but there was no official reaction from the leaders of the Bisnis movement. Soon after settling down again, the set of musical instruments arrived as well. It was a second-hand set from the neighbouring village of Luwaite, and not the promised set from Kieta or Rabaul, as the members revealed later.

Nightly rehearsals were organized. A variety of youths played in the band. An item of significance was that a number of them were not members from Wotal but youths from Warengeme and Wohimbil wards. Amongst them were the two adolescent sons of the former member of parliament Kani Happali who had contributed money to the band project, thus securing the right of his two sons to join the band. Kani's involvement in a Warengeme 2 project must be seen as an intrusion on his part into the sphere of the Bisnis

movement and Alex's earlier political realm. After his defeat in the election he was trying to regain ground and build up his support base in the village. Although the band was associated with entertainment and patis it basically had a very much more serious character and was regarded as a development and bisnis project, equal to the "komuniti work" scheme or a cash crop plantation[3]. Thus Kani could justify his involvement as a contribution to village development.

At the same time Maurice announced that he was going into bisnis, together with Andrew. He planned to open a large store and a coffee buying agency in his hamlet of Mogome. The enterprise was not going to be part of either Tilli Bros, Wotal Youth, or the WBG. He arranged for a grader, which was being used in Bana at the time, to come in and level a tract of land beside his own house where Maurice began erecting a storehouse for coffee. Here the two men were openly engaging in competition with the old bisnis establishment in Warengeme 2, centred around Tilli Bros and the WBG, and their leaders such as Gerry, Saas, Norbert, and Alex, whose wife still ran the only other trade-store in Warengeme 2. Typical of this configuration is, firstly, that it primarily involves a group of agnates. Again it reflects the basic pattern of sibling antagonism in Wam culture. Andrew and Maurice had no scruples about challenging their siblings who, so far, had fared more successfully and had attained a high degree of recognition and status. Below the level of rhetoric, where sibling unity is stressed and fraternal strife condemned, they owed them no allegiance and therefore did not restrain themselves in their attempts to rival their *nauwie*. This is especially evident in the case of Andrew, the eldest of the sibling group of Tillenge. He had had to endure seeing his younger brother rise to prominence and get streets ahead of him, often becoming in the process, the target of Alex's rebukes and public beratings. Now Alex had moved upwards and therefore had passed out of the immediate field of competition, so that this latest venture represented a new opportunity for Andrew to assert and establish himself as a man of prominence in the village.

Secondly, the venture reflects again the pervasive factionalism of collective enterprise in Warengeme. Until the election and Alex's nomination to office, the Bisnis movement had held together and supported their man in his competition for power with other segments of the village, mainly the group of prominent men from Wohimbil. Although the Warengeme 2 alliance always had been a fragile entity, it formed a unified front against outside competition. Now, however, the pattern had changed. The bisnis faction had prevailed over its adversaries and its action had ostensibly produced the desired results, in the sense that their pivotal figure had risen to a position of power. But, whereas the process of "becoming" was characterized by fusion, the attainment of the desired result led to fission. It is significant that shortly after Alex came into power the faction that made him should break up, splitting into a number of competing sub-factions. It is noteworthy in this connection that the alliance did not crumble only on the periphery but that fission actually also set in at the core of the faction. The rupture not only involved Andrew's conduct but also Gerry's behaviour in the situation. He did not necessarily support Maurice's and Andrew's venture openly but he certainly condoned it. On one occasion he even provided transport for the two while, shortly afterwards, he denied Alex the means of transporting

stocks for the trade-store on some dubious pretext. One of the reasons for Gerry's behaviour must be sought in his attempt to curb his successful sibling's influence in the village by supporting his budding rivals. A second reason why he tolerated this kind of competition was that he himself had switched his focus away from the promotion of intra-village collective enterprise to the development of an inter-village business corporation in the form of the Miyeme Development Corporation, which he was in the process of establishing. He was thus not over-concerned with how the various collectives in the village fared, and who was in charge of them.

For a period of two months or so, Maurice and Andrew were left undisturbed and they were not asked to account for the purchase of the set of instruments. They staged a number of patis, two of them in Warengeme itself, another in a neighbouring village. Then gradually the phase of speculation and rumours began as to where Maurice had got the money from to buy the set. Had he used personal resources, had he borrowed money, or had he misused Wotal's funds? If the latter were the case, then Maurice and Andrew actually should be operating the band as a youth group project. However, there was nothing to indicate this. Finally the tension reached such a pitch that it was decided to call a meeting to clear the matter up.

There followed two meetings in brief succession (11th and 14th February 1988), the aims of which were to sort out the problems of Wotal and, if possible, place the youth group on a new foundation. The chairman of the youth group of Luwaite was called in to chair the meetings. None of the main figures of the Bisnis movement were present at the meeting except, of course, Andrew and Maurice. By chance Alex arrived in the village during the course of the second meeting and, as we shall see, contributed to its outcome. The meetings produced no constructive results; on the contrary, they spelt the final end of Warengeme's youth group. I am not going to go into all the details but shall merely try to summarize the main points. The meetings were noteworthy because they contained a highly-critical evaluation of the youth group's activities by the members themselves – notably by the rank and file members this time, and not by the leaders of the group – in the course of which the ambiguous nature of the whole enterprise was brought to light: its explicitly modern appearance was stripped down and its implicit nature revealed.

The meetings revolved around two main themes: the whereabouts of the youth group's savings and, subsequently, whether Wotal should be kept on as a group at all. The topmost item on the agenda was, of course, where Maurice had got the money from to buy the set of instruments. Wotal's chairman found himself cornered very quickly when faced with the triple argument that, firstly, if the set of instruments had been purchased on a private basis then, consequently, the youth group's money was still in the bank and could be accounted for; secondly, if the band were being operated as a youth group project, then why were the members not consulted about the instruments' purchase; and thirdly, again if the latter were the case, why was the band predominantly manned by outsiders and not by members of Wotal.

The inquiry was spearheaded by a man called Luape from Talkeneme ward. Luape had always been a loyal but very critical member of Wotal, especially as regards the influence

of Tilli Bros in the enterprise and the way the interests of the three layers of the Bisnis movement were often not kept clearly apart. In the course of the first meeting, Luape became the spokesman of the rank-and-file members and others soon picked up his line of argument, not because they were necessarily favourably inclined towards him – he was otherwise often rated as an awkward stickler – but because his strategy proved so convincing.

What Luape basically did was to phrase his whole argument strictly within Wotal's formal framework and body of regulations, and to test how the running of the youth group compared with them. The discourse of collective enterprise and bisnis had its very own idiom. It was highly modernistic and was swamped with sophisticated phrases and technical terms from the world of finance and business organization. Wotal had a clear organizational structure with a number of elected officials, each with a specifically assigned charge for which he was responsible and accountable. Frontstage, these were held high and their importance in the functioning of the group was often referred to. The officials themselves publicly often stressed the significance of their charge. In bisnis meetings the talk was often of directors, advisors, chairmen and the board of management, and speakers often referred to items such as accounts, balance sheets, interest rates, records and the like, lending village enterprises an image of modernity and excellence which they in reality did not necessarily have. They belonged to the vocabulary and rhetorical equipment of the bisnis leaders, and those simply feigning importance. It was through this kind of language that the appearance was upheld that groups like Wotal were progressive and development orientated. What Luape did was to take the idiom literally and see how those in charge of the youth group lived up to the standards they proclaimed. Thus, for instance, he argued he had always been made to believe that the treasurer kept records of all the group's financial dealings and had the receipts to verify them; he now demanded to examine the records. Allegedly, Wotal's savings were lodged in an account in one of the banks in Wewak, to which only Gerry and the chairman had access. Luape asked to be shown the balance sheet and all missing deposits to be accounted for. Since Wotal's savings were in a bank account, Luape continued, he had been told that they were earning interest. He therefore wanted to know how much they had earned and be shown the figure on paper. Luape had made his own calculations of the youth group's earnings which he had jotted down. For each item he had listed he demanded to be shown a valid receipt in one form or another. He justified himself by declaring that he was merely applying the rules and regulations as spelled out in the constitution.

Maurice had to face the full force of the inquiry more or less on his own, whilst Andrew remained in the background. He tried to steer the focus of the meeting away from the meticulous scrutiny of Wotal's financial transactions into the field of more general issues and the role of youth in the village, applying the well-worn rhetoric of development and komuniti. He had to concede that he had bought the set partly with Wotal's money but hurried on to proclaim that he had never intended to use it for his own private benefit but only as a youth group project. He talked about new opportunities for Wotal, new aims, new projects; he even mentioned that he had heard from Alex that Wotal was possibly to

receive government funding, which would allow Wotal to start afresh, this time with a large-scale project.

However, Maurice did not possess the same power of conviction as for instance Alex had shown on previous occasions. The members did not fall for his smokescreen of grand visions. They wanted facts. Facts which, however, Maurice was unable to provide. He admitted that he had been wrong not to consult the members prior to the purchase. But this did not ease the pressure. They dug deeper into the financial maze of Wotal, where they revealed that the instrument set, which had cost 1300 Kina, had not been paid for fully and that a debt of 960 Kina remained. At the same time, however, there was no trace of Wotal's savings. This meant that Wotal's assets had not been used for the instruments but misappropriated otherwise. In the course of the second meeting it was disclosed that smaller amounts had been misused by various officials for private purposes, and that substantial sums had been taken from the bank by some of the leaders of the Bisnis movement, like Gerry, Andrew, Maurice and Saas, and used for a variety of business deals, mainly involving the purchase and sale of coffee. In principle there was nothing wrong about that, as long as records were kept, but here 800 Kina of Wotal's money could no longer be accounted for. Alex, be it noted, had played no part in these transactions.

The members reacted vehemently to this news. The main point of indignation was not so much the actual misappropriation of funds but the fact that the members had never been consulted about the dealings. They had not been collectively discussed, the members had not been asked their opinion, nor had they ever taken a vote. In other words, the principles of the collective had been disregarded and abused. This was expressed in the form of lacking rispekt on the part of the leaders: "Ol lida ol i no sowim rispekt long ol memba" ("the leaders showed no respect for the members"). The idea of rispekt is a much-used concept and has a great depth of meaning. It subsumes all positive aspects of a social relationship and forms the basis of constructive social interaction. Respect is not only an attitude demanded from juniors in their behaviour towards senior kinsmen and kinswomen, it is the pivotal constituent of the relationship between equals. *Meinheil* regard each other as equals and they make this manifest by showing respect for each other. They can neither make demands on each other, nor give each other orders. Such behaviour would be taken as a breach of the code of equality and disrespect for the other's autonomy. The same is true of the relationship between *pinandil*. Even though they stand in opposition and competition with each other, respect for the other is still the basis of the relationship. In ritual exchange, one does not try to crush one's kawas but merely to outdo him by a small margin. To do otherwise would be clearly showing no rispekt for one's counterpart. Transgressions of rispekt normally entail sem (shame). Shame is the corollary of a lack of respect. When a person violates a code, thus showing disrespect, and does *not* "carry shame", it either means he is convinced that he was right in doing what he did, or he did it intentionally in order to set himself apart or, more precisely, above the other. The absence of both respect and shame indicates a switch from a relation of equivalence to one of hierarchy. Bilateral equality is being replaced by unilateral domination.

When the base members of Wotal blamed the leaders for not showing them rispekt, they were accusing them of transgressing the code of equality. They had been excluded from the decision-making process in a matter that concerned them as a collective. They had been passed over, which they interpreted as not being taken as full and equal participants. Here we find a basic difference to the way Alex conducted matters in the early days of Wotal. Although it is quite obvious that it was he who decided on what went on in the youth group he never blatantly imposed his will on the others but always succeeded in veiling his injunctions in the form of advice or suggestions and thus upholding the appearance of participation in decision-making. In the course of the second meeting, Luape and his followers from Talkeneme expressed their resentment at the way they had been treated by addressing themselves ironically as "we of Indilahul" and as we bus kanaka. Indilahul is a remote hamlet of Selnau deep in the bush and its inhabitants are regarded as the epitome of backwardness and ignorance (cf. map 3). In the village the people of Indilahul have become a standing joke.

Luape and Negarke, the two main figures from Talkeneme, were the first to announce their withdrawal from Wotal Youth Group. They were tired of being exploited by the leaders of the Bisnis movement for their own purposes and benefit. "I've laboured for nothing," Luape exclaimed at one point, "I've worked very hard ... I've had enough and I'm leaving, I might as well just remain a bush kanaka, thank you" ("Maski mi labour (!), draipela wok mi wok ... em inap na mi go, mi ken stap olsem bus kanaka, thenk yu"). The members from the other parts of the village followed in neat succession. Wotal fissioned into numerous splinter groups, all of which announced in the course of the meeting that they would be going into bisnis on their own. Whether they would in the end is a different matter. It is a significant fact that they had no wish for any further association with the establishment of Tilli Bros; moreover, they were absolutely adverse to becoming engaged in any new form of collective enterprise. Even when Alex, who had arrived whilst the meeting was in progress, suggested forming a new group and said that he would try to secure government funding, the members declined the offer. They had no faith in the collective anymore.

The manner in which Wotal fissioned displayed a distinct pattern. It did not simply break into two or three parts but fragmented. The few members from Warengeme 1 pulled out, voicing the often repeated accusation that the way things had turned out was typical of the people of Warengeme 2 and their habit of always trying to dominate others. The Warengemes and the Wohimbils (these included those members that had joined Wotal only very recently, amongst them the sons of the former member of parliament) drew out separately. The only thing that the two groups had in common was their joint aversion to Warengeme 2 but there was no mention of them remaining together in any form. In Warengeme 2, the heartland of Wotal, the people from the Simete ridge, under the leadership of Luape and Negarke, were the first to announce their withdrawal. They raised the same accusations as the members of Warengeme 1 had done, this time against the central section of Warengeme 2, i.e. the road section on the main ridge. Their withdrawal reflects the general attitude of many of the Simete inhabitants, who were under the

impression that their interests were continually neglected, and that when the issue of development was raised it only concerned the more central hamlets on the main ridge.[4] Fission did not stop here, however. The central section of Warengeme 2, which comprises approximately the hamlets from Selmbuneme to Enniki and which was accused of being domineering by the others, itself split up. The cleavage, be it noted, did not follow the boundaries of lineages. The lineages did not form the fission groups; rather the splinter groups involved much smaller segments, maybe two or three members of a lineage at a time. Furthermore these segments displayed the tendency to coalesce with similar segments from other lineages – significantly, with lineages that stood in a cross relationship to them.

Thus, for instance, in the Simete group the two main figures were Luape and Negarke. They functioned as spokesmen for their followers, and together they were planning to form a new, distinctly smaller, bisnis enterprise on the core group level. The two men stood in an affinal relationship to each other, i.e. they were *meinheil*. At the core of the contention – in Maurice's lineage (*petule* of Wolhete, line M) – Maurice's brother Nungusi, who previously had been part of his brother's bisnis plans, broke with Maurice and announced that he and his *meinheil* were going to join forces and start an independent bisnis. The dispute over Wotal also reopened the fissure between the two *milmbe* segments of Wolhete, i.e. lines K1 and K2. Uhane Anisi, the principal figure of line K2, was the treasurer of Wotal, and part of the blame for the collapse of the youth group was, naturally, assigned to him. He for his part was closely aligned to Gerry, his *meinheil* through marriage. Although the situation he found himself in would have suggested an alliance with Maurice and Andrew, he did not team up with them, because he himself blamed them for ruining all Gerry's achievements. K1, the larger of the two segments, were united against Maurice and Uhane Anisi, their agnates, but split on the issue on what was to follow Wotal. One of their proponents, Wagehei, supported his *meinheil* Alex – he had been one of Alex's campaign managers during the election – in suggesting that the people should form a new youth group, whereas his lineage siblings – albeit nominally also Alex's *meinheil* – were strictly against any further attachment to the people of Tilli Bros. In the dispute they referred to themselves as the "border line" (lain bilong border), indicating thereby their marginal status in the whole affair. Their main spokesman, a man called Guiniali, announced too that he and his followers were going into bisnis, either independently, or with some of the *tineme* people of Talkeneme (line D 2) with whom they stood in a cross relationship, or else with Luape's group from Simete. Here too we have a *meinheil* connection, for Luape was Guiniali's immediate affine through marriage. The possibility of all three groups coming together, i.e. Guiniali, the *tineme* line, and the Simete group, was ruled out because the *tineme* were involved in an enduring conflict over land with Luape and his people who were their agnates.[5]

The list could be extended in this way, bringing forth the pervasive pattern of agnatic fission and affinal fusion. When conflict erupts, as it did now in the case of Wotal, it predominantly runs along agnatic lines, siblings against siblings, whereas affines converge. The groups that come into being through this factional break-up themselves take on the

structural properties of factions. They consist of a core and a more peripheral following, they are centred on leader figures, such as Luape or Guiniali in this case, they take on the form of conflict groups in the sense that they assemble in the face of opposition but do not necessarily act in concord when contention is absent, and their members are recruited on diverse principles such as kinship, residence, peer group allegiance, and friendship, and they do not constitute durable entities but are liable to break up themselves when facing problems.

Up to the time I left the village three months later, none of these new groupings had come into action. They remained potential formations with a lot of talk about initiating new projects but they did not possess the necessary impetus to actually start any. Furthermore, it became apparent that, at that specific time, there was no force at hand which was sufficiently potent and commanded the necessary authority and drive to rally the various segments in Warengeme 2 and unite them again – neither in the appearance of a leadership figure, such as Alex had represented earlier, nor in the form of cogent ideology, as in the case of the New Apostolic Church. Alex, who witnessed the collapse of Wotal, still enjoyed a high degree of prestige but through his rise to the post of minister he had forfeited his immediate link with the youth group and no longer necessarily commanded the authority to convince the members of Wotal to overcome their differences and reunite.

What he did do, however, on the occasion of the second and final Wotal meeting was to take the opportunity of a verbal display of his status position and forcefully exhibit his contempt for his siblings Andrew and Maurice. Towards the end of the meeting he launched into a public revilement of his two brothers. To be more precise, his talk actually brought the meeting to a close and left the assembly more or less speechless.

Below, I reproduce an excerpt of the last part of Alex's speech. He held it at a point when it was already apparent that Wotal's breakup was inevitable. He did not try to save the enterprise he had brought to life but used the event for the purpose of demonstrating his superior status in relation to his two (elder) siblings Maurice and Andrew. The circumstances allowed him to exhibit what otherwise is held in contempt and avoided among the Wam, that is making status difference explicit, and hierarchy felt. Whilst he himself had succeeded in his bid for bigmanship all along the line, his two competitors had evidently failed to assume the position of leaders of the Bisnis movement. He takes the opportunity not only to reproach them for their failings but also to demote them publicly.

Amongst other things, I think the quoted passages bring forth the ambiguity of the sibling relationship; on the one hand, siblingship in its ideological dimension where brotherhood implies a common identity, unity and mutual compassion, on the other hand, siblingship as it is manifest in social practice, where the relationship frequently is tinted by pernicious competition, antagonism and jealousy. This ambiguity is especially reflected in the manner in which Alex refers to Gerry, his closest competitor-cum-ally, who, notably, is absent on the occasion. Gerry is the peg on which Alex hangs both his censure for the failings of Wotal and his vituperation of his two siblings. Within the same passage he criticizes Gerry and, shortly afterwards, he plays on the themes of his close bond to his

brother, his concern for Gerry's reputation, and what Gerry had achieved for the benefit of the village, in order to tongue-lash Maurice and Andrew.

Alex held his speech without interruption. For the purpose of presentation I have divided it into three parts. Each part deals with a specific aspect of the failed enterprise. In the first two parts, Alex speaks in a very matter-of-fact and controlled manner. In the third, and longer passage, he displays much more emotion, vacillating between sobbing woefulness and raving anger. Significant, amongst other features, is the way Alex frequently reverts to English. Not only does he insert entire English phrases three times, he also frequently uses highly-anglicized terms such as "advice", "problem", "investigate", "complain", "result", "lead", "proud of that", in order to express himself. Furthermore, his speech, especially the latter passages, is riddled with the terms "bloody" and "fucking". The frequent use of a highly-modern idiom under apparent emotional stress – either modern Tok Pisin or English – was a feature I observed quite often in Warengeme. Moreover, I got the impression that the higher the emotional pitch, that is anger, the higher the propensity to use the more alien idiom.[6] I have put the English phrases in italics. Alex begins with a brief summary of the history of Wotal:

> "First we had this which you called Tilli Youth. Okay, Andrew was its leader, and it went on for a while, and then it broke down midway; it got up again and you gave it to Perite to run. He led it for a while and then I had a quarrel with Perite, so I threw Perite out and gave it to Maurice to run. *[To Maurice]* I thought you were capable of running it, but no, it went for a while and then it broke down again. And now everything has died. And now you want to break up and each go his own way. That's wrong. Okay, now Gerry he was your advisor, and now Justin [Luape] you complain, you're the mouth [i.e. spokesman] of the bush line, and you, Negarke, you talk. At one time, during a meeting before, I asked you to change your advisor. Did you change him? Bullshit, no! And now you want to complain. All of you said, no Gerry will carry it [lead it]. All theses troubles now, if you had decided to investigate about all this coffee money before, Gerry would be up in court. Maurice would be up in court, all of you [i.e. leaders of Wotal] would be up in court... "

Two items are noteworthy in this first passage. The first refers to the role he ascribes to himself and, in contrast, the part others played. He makes it quite explicit that he was the driving force and authority behind Wotal with the mention that he "threw Perite" out and "gave it to Maurice to run". In spite of his central position he makes it quite clear at the same time that it was others (Andrew, Perite, Maurice) who ran the enterprise down again. They proved themselves unworthy of handling *his* youth group. A second point is that he also includes Gerry among this group of incompetent leaders, and reminds them that he himself had earlier on suggested that they replaced Gerry as their "advisor". But they did not heed his warnings and, consequently, the youth group ran into difficulties. Furthermore he implies that Gerry and the others responsible for Wotal had even behaved unlawfully in the way they had misappropriated Wotal's funds. Here Alex is clearly setting himself apart, not only from the others but also from Gerry. Gerry carries as much blame for the failure of Wotal as the others. Incidentally, the fact that Alex suggested at one time that

Wotal got rid of Gerry as their advisor is also an indication of how little trust and how much strain there was at the core of Tilli Bros.

He then goes on to talk about the prospects facing any splinter group going into bisnis. He gives them only a slight chance of success and predicts that they will soon be confronted by the same problems as before, maintaining that it needs a strong leadership to succeed. He also remarks that people are facing the same problems all over the country, thus playing on his image as a man with a wide range of vision and experience.

> "... About breaking up the youth group, no, that's not the way, I'm not going to talk about breaking up the youth group. Maybe you can think of a way to find these [missing] 800 Kina. But now you want to take this money to the bush [i.e. Simete], what do you want to do with it? Negarke! The problem will still be there, Negarke! Take this money to the bush, and you'll have the same problems as before. ... . When these things like the bisnis group or the youth group break down, they don't break down for just any old reason, they break down because of the doings of men. If you have a good man to run it, then it will go, if not, then it will break down. Negarke, I'm telling you. Now you're talking about these 800 Kina, you [and your people] want to take your share of 200 Kina to the bush, I'm telling you, it will break down there too. I'm not trying to make you look bad, believe me, I know, this isn't only a problem here, it's the same all over the country, they all have the same problems. ... . It makes me feel sorry to hear that you now want to break it all up... "

After this more conciliatory interlude, he turns to his two siblings Andrew and Maurice, this time in rage.

> "... And one more thing, you Maurice and Andrew, I'm telling you, you never showed respect for Gerry. Really not! It's got nothing to do with me, because I never worked together with Gerry, but the two of you, you were here and you worked with Gerry, and now you've gone and dropped him. Gerry now has a bad name because of you, because of you Maurice and you Andrew! If you had listened to Gerry and done what he said, then everything would have been alright. But you thought you knew better, and now Gerry has got a bad name! *I can find cry when I talk here*! You fucking well didn't respect Gerry! Gerry brought many good ideas to the village and you messed them up! You thought you knew everything! Why didn't you listen to him? He would have given you the advice to run the fucking business. But all you did was to go and get fucking drunk and then ruin everything! ... . Now, if Gerry comes to the village and wants to tell the people something, do you think they'll still listen to him? No! It's not Gerry's fault, it's all your fault! The youth group was not in vain, the Bisnis group was not in vain, they produced results, now you've got a bloody corporation, you should be proud of it, now you've got this bloody Miyeme Development Corporation. All because of the fucking youth group and the bloody Bisnis group! But you, bloody Maurice and you bloody Andrew, you've just gone and fucked it all up again! *I don't want to see this again*. If you have a bit of brain, then just step back and listen to what others tell you. Andrew, you could have been the driver [of the group's future car] and you would have got a salary, you could have been proud of that. Maurice, you could have been the

secretary, you would have got a salary, you could have been proud of that! Just like Donald, Stanley, Negarke, Justin, and all the others. Not one thing grows from nothing! One man must take the lead, all the rest of us must respect him, he carries all the work [i.e. responsibility], then it will grow and come up big and strong. If something is new, and everyone of us says, I'm the boss, I'm the boss, I'm the boss, then nothing will come of it, it won't be able to bear fruit. Okay, Maurice and Andrew I want you to set this all straight again, *I don't want anybody to spoil Gerry's name. I cry because of Gerry and I'm going, fucking*! I can talk no more, I'm sad for Gerry, I cannot stay."

With this, Alex finally broke into tears, got up, and left the meeting. There was a profound silence. After a while, the chairman tried to start the meeting up again, but the people had lost their appetite for any further discussion, and the meeting was closed. It meant the end of Wotal.

This last passage contains a number of significant features. Firstly, as noted above, the propensity to code switching becomes evident. A second feature concerns Gerry's position and the change in the way his role is interpreted. Whereas in the first passage Alex criticizes him and discreetly attaches to him much of the blame for the failure of the youth group – thus revealing the sibling relationship from the viewpoint of social practice – he now switches his approach and depicts Gerry not only as the benefactor of Wotal and hope of the village in terms of development but also as his cherished brother to whom he feels committed and closely attached. Here siblingship is portrayed from its ideological side. Gerry's debasement is Alex's woe. Now, suddenly, Gerry is shown as the man who brought good ideas to the village, the person who could have given the villagers advice on how to conduct bisnis. But now the people will not listen to him any more, not because he did anything wrong, as implied a short while ago in the first passage, but because Maurice and Andrew ruined everything and spoiled his reputation.

Gerry is no longer the target of Alex's reproaches but Maurice and Andrew instead. On the contrary, he now refers to Gerry's achievements, the youth and the Bisnis group, and even the Miyeme Development Corporation (which at the time had not yet been officially founded). At the same time, Alex makes his disdain for his two siblings more than explicit, not least in the manner he addresses them: bloody Maurice and bloody Andrew. This kind of blatant directness is otherwise uncommon in public among the Wam, where reproaches and accusations are usually veiled in indirect speech and tropes. Here the directness is a feature of intended status differentiation. Alex accentuates it – this time with more subtlety – when he draws the picture of how things could have been if the two men had not tried to assert themselves and play the part of leaders. Alex could have become the driver and Maurice the secretary and they could have been "proud of that". But they overstepped the mark and now everything is in a shambles. What Alex is implying is that his two siblings simply do not possess the necessary qualities and potential to become leaders, and are therefore notably unlike himself. In other words he is saying to them, do not measure yourself against me, you are not my equals. They should have remained where they were and stayed "just like all the others".

Although Alex applies direct speech in many places, he does not refer to himself and his own role in the whole affair, with the exception of the first passage. He never says that *he* is angered or feels hurt because Maurice and Andrew destroyed something that *he* had created, namely Wotal, or that he feels justified in acting as he does because they went against him. All the anger, indignation and anguish he expresses is channelled through his concern for his brother Gerry. It is Gerry's name and reputation he is worried about, not his own, although he himself would be equally justified in feeling angered. He wraps his exposition of status, prestige and power in a coating of cultural ideals. He is not doing this for his own benefit but for the welfare of a sibling, a *nauwie*. Thus, he is behaving according to a Wam cultural ideal. No one can accuse him later of being prestige hungry, of seeking power, of "mitasolism", or of creating hierarchy, because he had not done it for himself.

After Wotal's disintegration, Warengeme 2 was actually almost back to the start in its quest for komuniti. The various subgroups retired to their wards and hamlets, each one switching the blame for Wotal's failure to others. Once again it appeared that kastom had prevailed over komuniti.

THE EMERGENCE OF THE MIYEME DEVELOPMENT CORPORATION

The only group that came out of the Wotal collapse unscathed was Tilli Bros. It remained more or less unaffected by the youth group's disintegration. This time, however, it did not function as a collecting tank for the other splinter groups since these were now even more disinclined to join Tilli Bros than before. Tilli Bros itself kept up business as usual. Only two weeks after Wotal's final meeting, Gerry, Norbert Anisi, Saas as the representative of the WBG, and Hiale, the councillor of the neighbouring village of Bana and a close associate of Gerry's, convened the first official meeting of the next and larger collective enterprise, the Miyeme Development Corporation (MDC).

The MDC was clearly Gerry's brainchild. It was his scheme, he had drawn up its constitution and established the necessary contacts with all the outside agencies involved. The project had been discussed several times in some formal, and other less formal, meetings with the members of Tilli Bros and representatives from other bisnis groups of the area. Now it was officially presented to the public.

The Miyeme Development Corporation was a much more ambitious project than all the previous ventures. It was not devised as just another village bisnis group but as an inter-village enterprise, comparable in function to the other two development corporations operating in the East Sepik Province, the Sepik Producers Coffee Association (SPCA) and the Lus Development Corporation (LDC). Its planned field of enterprise was the marketing of cash crop products, i.e. buying the villagers' coffee and cacao in the Wam, Urat and Muhiang areas and selling it directly to the central coffee and cacao agencies in Wewak respectively. The reasoning behind the whole venture was based on the assessment that the other two corporations, which were in control of the whole cash crop business in the area, were exploiting the Wam villagers by not paying them fair prices for their products and withholding the win mani (dividends) from them under dubious pretexts. They, in other

words, were not giving them a fair deal and were thus helping to sustain the underdevelopment of the villages. Both the SPCA and the LDC were strongly identified with other areas. They were dominated by outsiders, by people from Maprik, Wewak, other provinces, or even other countries, who had no interest in seeing progress in Wam or Urat villages. If the villagers had their own corporation and could bargain for their own prices, the argument went, it would place them on a different footing with the modern, outside world.

The MDC was planned to be a highly-modern organization, based on a sound legal footing. Gerry provided the necessary knowledge and experience in business matters. He had applied to have the MDC registered as an official company with the appropriate authorities in Port Moresby. He had engaged an Australian firm which had a branch in Wewak to take over the accountancy, and he had chosen the lawyer's office of Bernard Narokobi and his associates as their legal consultants. They planned to have a modern warehouse built in either Bana or Warengeme and to purchase a small fleet of transport vehicles and, eventually, the MDC even hoped to be able to employ a small salaried work force.

Membership in the MDC was not open to individuals but only to bisnis or youth groups. The official reason given for this during the meeting was that they wanted to reduce the potential of strife and conflict over the payment of win mani to a minimum. As previous ventures had shown, the payment of dividends had always led to problems when individual shareholders were involved. The MDC was not to be a collective of individuals but an assembly of groups instead.

The enterprise had a total of 10,000 shares at its disposal, at a price of one Kina per share. The minimum amount of shares necessary for membership was 1000 per group. If the necessity were to arise in the future, the MDC would raise its capital stock later. Each group was to be represented on the board by one director, preferably its chairman. If two or more groups from the same village joined, they were asked to elect one director from their midst who would then represent the village on the board as a whole.

At the time the meeting was held, six groups had joined the Miyeme Development Corporation. These were Tilli Bros, the Warengeme 2 Bisnis Group, Nembegele BG from Bana, Einde Youth from Hambini 3, Hambini 2 Bisnis Group and Aresili Bisnis Group. The meeting was organized with the intention of informing other bisnis groups of the area on the aims of the MDC and the conditions of membership. It was attended by approximately a hundred people from the different Wam and Muhiang villages. Amongst those present was Kani Happali, the former member of parliament for the Wam-Urat constituency and Alex's competitor in the elections. The Urat villages were not represented, with the exception of Luwaite.

By that time, the larger part of the shares (7000) had already been allotted to the various groups but they had not been paid for yet. The distribution of shares and directors' seats was suggestive. Whereas the groups from Aresili, Hambini 2 and 3, and Bana each held one thousand shares, the Warengeme Bisnis Group held 2000 and Tilli Bros held a thousand. Furthermore, whereas Hambini 2 and 3 were conceded one seat on the board of

directors, following the corporation's rules, Warengeme 2 was overrepresented. It not only held two seats – one for the WBG, one for Tilli, which would in itself have been against the company's principles – but actually three. Norbert Anisi represented Tilli Bros, Gerry and Saas stood for the WBG. In addition, Gerry held the position of what was called "overall manager". He explained during the meeting that he would later step down as a director and only function as the company's manager.

Despite the apparent sound legal basis and the clear organizational structure and rules, the listeners and potential members had their doubts. They were especially critical of the overrepresentation of Warengeme 2 in the whole enterprise. In a way it appeared to them that they were replacing domination by the SPCA and LDC with the hegemony of Warengeme 2 and Tilli Bros. The MDC representatives tried to put their minds at rest. One of their speakers urged them not to believe the rumours that were circulating to the effect that the new company was a private company owned by Gerry, Alex, Norbert and councillor Hiale from Bana. This, he said, was by no means the case. He then continued to say to them, "There's a lot of jealousy in the village [meaning Warengeme] and you from other villages should not believe these stories you hear."

The people were especially sensitive about any possible participation of Alex in the whole enterprise. Although there was the general feeling that Alex should try to achieve as much as possible for the development of his constituency, he should restrict his activities to parliament and the government. They were against any direct participation on his own part at the village level. Here we come across the same pattern as earlier in the case of Wotal, in the sense that it became apparent that he had lost much of his immediate support at the level of the village. The people were proud of him and he enjoyed high prestige but, at the same time, he presented a threat to the villagers' autonomy. The people seemed to think that, if he had any further say in their affairs, he would become too domineering and influential. Although no one had explicitly articulated any apprehension in this direction, the question hovered over the meeting and, from time to time, insidiously crept into the debate. Towards the end, Alex's role in the Miyeme Development Corporation actually became an issue in the meeting. The MDC representatives from Warengeme denied any involvement of Alex in the new enterprise. As one representative put it:

> "You people of Wam-Urat, you all know that Mr Anisi is the provincial member for the Wam Urat and that he is from the same family as Gerry Anisi. Do not think that Alex started this work here and that he is now going to be its papa [i.e. its boss], that is not the case, really not. I'm telling you fathers and mothers from Urat, this work has nothing to do with politics, no. This work concerns the [bisnis] groups only, and Alex is neither a chairman nor a director, he is just like the other people. ... . I would be sorry to hear that you had heard the rumour that we were only waiting for Alex to start this bisnis, and that he was going to run it with his family. That is not correct, and you would be doing his name an injustice. Don't think Alex threw some money in either. For instance, people were saying that Alex had given the corporation 15,000 Kina when he won the election, very sorry [but that is not true], ... , we do not like the people of Warengeme spreading these kinds of rumours and shooting us with their talk. ... . We

don't like you bringing Alex's name into this corporation. Some people in Warengeme say that this corporation is here to strengthen Alex and that he will run it, if you believe that, then you're spoiling Alex's good name."[7]

This kind of appeasement didn't completely satisfy the onlookers but they agreed to go back to their villages and discuss the matter of membership with the people of their bisnis groups. They would then give their decision on whether to join the MDC or not at a later meeting. The event ended with a communal meal of rice and fish which had been prepared by some of the women from the WBG and Nembegele BG.

The enterprise was still far from the operational stage and when I left Warengeme three months later matters had not proceeded any further. Still, the venture as such raises a number of points of interest. Firstly, we have a repeat of the pattern of development of collective enterprises, in the sense that, just as after the earlier Warengeme 2 Bisnis Group and Tilli Youth Group had failed, there was contraction to the core group level which, be it noted, was followed by expansion again shortly afterwards. I believe no one ever seriously considered seeking the reasons for failure on the operational level, and to form a new group, possibly on a smaller basis but with a more efficient mode of operating. There was a distinct overvaluation of the structural properties of an enterprise and a disregard for the functional aspects. The answer to the failure of a collective enterprise was always the establishment of a larger and more elaborate venture.

The reasons for failure were sought within the paradigm of kastom and komuniti. Collective enterprises failed, the argument went, because they still very much obeyed the laws of kastom. And the remedy for these failings was the instalment of organizational forms which contained even more alien structural properties than the previous edition. In the case of the MDC these involve, for instance, the board of directors, or the engagement of modern accountants and legal representatives. On the surface, the MDC contained even fewer customary elements than earlier enterprises. It was on the basis of these tokens of modernity that its members believed that their venture would be crowned by success.

A second point of interest raised by the Miyeme Development Corporation concerns the ambiguity of the issue of equality it contains. On the one hand the MDC was an instrument through which the villagers hoped to come to better terms, and attain equality, with the encapsulating system; on the other hand the founding of the agency, which had the express purpose of balancing out relationships between the village and the outside system, raised the question of equality within the underprivileged village system. Here the interlinkage between the two systems becomes apparent once again, not only in the sense that the village attempted to become equal with the modern society surrounding it but also in the sense that, in the process, the properties of the encapsulating system were liable to be exploited and manipulated in order to create hierarchy within the village system.

The MDC represented a further attempt by the villagers to achieve equality with modern Papua New Guinea society and, thereby, establish the basis of komuniti within their own society. Both the SPCA and the LDC had lost their image as rural corporations. In the course of time they had grown to such a size and complexity – they were modern business companies – that they were no longer regarded as agencies representing the

villagers' interests and, thus, they were reckoned to the "other side". Over the years the villagers had been manoeuvered into complete dependency. The companies dictated the terms of trade and to many villagers it appeared that it was the companies' directors who arbitrarily determined the price of their cash crops. On the other hand, the village producers had no means of bypassing them. What made matters worse and put even more strain on the relationship, especially in the case of the SPCA, was that the companies were plagued by chronic mismanagement, the effects of which impinged painfully on the villagers, for instance in as much as the SPCA failed to pay win mani to the village shareholders for several years running. They also seriously believed that the continual downward trend in the price for coffee and cacao had less to do with the conditions on the world market – a mechanism the villagers naturally had little insight into – but rather more with the exploitive nature of modern business enterprises.

The idea of possessing an agency of their own through which they could market their cash crop products themselves was appealing because they believed they could thereby decrease their dependency on others and attain the necessary degree of autonomy, in order to compete with the agencies of the encapsulating system on an equal footing. This meant that they would at last be given a fair deal and be treated as equal partners in bisnis and that they would receive what they felt was due to them, that is higher prices for their products. A higher income for all meant a higher standard of living for the whole village, and this, in turn, would entail a reduction in the incidence of strife and conflict. The prospects were bright and the MDC promised fundamental changes to the way of life in the village. Once the MDC was installed and operating, the people would be able to purchase what they desired, they would be able to send their children to High School where they would receive a better education. In turn, these would return home, attracted by the bisnis opportunities the village provided, and no longer seek their future in the towns. The MDC would not only provide salaried jobs in the village; the people would also have access to loans with which they could initiate new bisnis ventures on their own. Jealousy, the permanent scourge of Wam society, would subside and contention would give way to cooperation. Not only would, for instance, the bride prices be paid immediately, they would also in general be much lower because the people would no longer try to exploit the institution with the aim of earning money off their fellow men. Men would no longer have to make debts in order to meet their obligations to their kinsmen, which meant that no longer would embittered creditors have to seek redress through sorcery. In other words, the prospects of the Miyeme Development Corporation meant a step closer to the ideal of komuniti.

However, the reaction of the villagers at the meeting showed that they did not necessarily share the same optimism as the patrons of the new corporation. They were apprehensive lest the new enterprise produced the opposite of what its leaders proclaimed; namely, that it would provide a few village bigmen with the instrument for controlling the villagers' source of income and exploiting their position to their own benefit and status.

In this context, the villagers' evaluation of the role of Alex is revealing. One would have thought that, in view of the position he held and the influence he commanded, it

would have been rated an asset if Alex had been part of the new corporation. They could have profited from his experience in, and knowledge of, the encapsulating system and benefited from the contacts he undoubtedly had in the urban setting of Wewak. Significantly, however, the opposite is the case. One of the potential member's implicit conditions for joining the MDC was that Alex should not hold a leading position in the enterprise. We can take this as evidence that there are certain limits to the amount of power and influence Wam society is prepared to grant any one of its members. The traditional political system relied on the initiative and the abilities of bigmen, just as the conception of modern Wam society – the komuniti model – assigned the issue of leadership critical significance. The primacy of bigmen and leaders is tolerated, and even accepted, as long as the gain of one party simultaneously entails a benefit for the other side and at least a marginal degree of reciprocity is sustained. How big this margin is remains a function of the quality of the relationship between the bigman and his following, and a question of how much social credit he has been able to accumulate over the preceding years.

The career of both the traditional and the modern bigman resembles a tightrope walk. Each step towards more influence and prestige puts additional strain on the willingness of his followers to sustain their support for him. If he ventures too far, the support will fail. Either his followers will desert him, or else he is liable to be cut down to size through sorcery, or both. This is basically what happened to the first bisnis leader of Warengeme, Wangu Wangu, who was threatened with sorcery when he became too successful as an entrepreneur whilst, at the same time, the returns from his activity no longer flowed back into the social system. After his wife and one of his children had died, he moved out and set up residence in a neighbouring area. In Alex's case, matters had not yet developed so far. He had not been sorcerized but his sensitivity towards the issue of sanguma indicates that he was well aware of his vulnerability. On the other hand, he had lost a certain amount of his power and influence in the village. The reaction of the members of Wotal who had earlier turned down his proposition to form a new youth group, and now the response of the attendants at the MDC meeting, who intimated that they were against any participation of his in the new organization, shows that Alex had overstepped the mark. The villagers were no longer prepared to grant him unconditional support. Through his success in the elections, his nomination as government minister, and through his subsequent behaviour towards his fellow villagers, Alex had overstretched the code of equality. His manner of conduct suggested that he was no longer "a man of the village", and any further dealings with him threatened to be on a hierarchical basis, an interaction between a superordinate and subordinates. This the villagers evidently had no wish for.

One last point of interest concerns the position of Kani Happali, the former member of parliament, in the whole setting. During his career he had more or less experienced the same fate as Alex was now being subjected to, that is he had gradually lost much of his support and influence in the village after becoming their representative in parliament. Now that he had lost the election and returned to being a simple man bilong ples, i.e. a villager, he was on the upgrade again. He was granted considerably more authority and respect than before and his word suddenly carried weight again, even amongst those who had been his

opponents previously. His whole conduct during this period suggested that he was back in the indigenous system of political competition and was attempting to rebuild his base of power. It appeared that Alex and Kani had exchanged parts in the play. Kani had taken over the role as challenger whereas Alex would have to try to defend his title. As is the case in other settings, sympathy and support is often on the side of the challenger.

NOTES:

[1] The seat was won by Pius Malip (2920 votes), followed by the sitting member Asimboro Ston (2890), Cain Yapi (2571), Alex Anisi (2520), and five further candidates (cf. Times of Papua New Guinea, Week 9-15 July, 1987).

[2] Cf. Times of Papua New Guinea, Week 19-25 November, 1987.

[3] It was possible to earn a lot of money with a band. There were not many music groups in the area but there was a growing number of events (patis, social nights) where groups were engaged. The hire for a group ranged from K100 to K120 per night, "six to six" was the standard clause, meaning the band played from six p.m. to six a.m.. Especially during and after the coffee season such social events were staged nearly every Friday and Saturday night in at least one of the villages of the Wam, Urat or Muhiang areas. Often patis were staged in two villages at the same time. Thus, in theory at least, a youth group could generate considerably more income, with less input, in a matter of two or three weeks than Wotal earned with its "komuniti work" scheme in several months.

[4] The inhabitants of Simete were indeed at a disadvantage in many respects. Thus, all important meetings were held in the main part of the village; they had no road access which meant that they had to carry their coffee to one of the selling-points in the main part of the village; they were never visited by any of the village officials in an official function; they were farthest away from the Community School and the two churches in Warengeme.

[5] This involves the land conflict mentioned earlier on between the lines D 2 and D 3 of Talkeneme ward.

[6] On one occasion, and in a state of rage, the village magistrate who, to the best of my knowledge, knew no English at all, uttered the words: "I warn you my friend, be careful!" I must admit that I was completely taken by surprise by this switch of the idiom. The only explanation I have for this kind of behaviour is that the display of excessive anger or rage is, at least to a certain extent, put on and that the actor is more in control of himself than he appears to be. Since Tok Pisin, and English even more so, is more prestigious and authoritative than the indigenous idiom, it would suggest that those concerned revert to this kind of code switching in order to convey the appearance of strength and determination.

[7] The meeting, which was held on the 27th February 1988, was recorded on tape. At the time, the source of these rumours was not known. Later it was established – whether true or not I do not know – that they were spread by the New Apostolic Church. The act was interpreted as an act of vengeance against Alex, who had deserted, and clearly taken position against, the NAC after his win in the elections.

CHAPTER TWENTY-TWO

SUMMARY AND CONCLUSION

To begin this final chapter I should like to refer back to an episode I briefly described at the close of chapter eleven (cf. p. 250). It recounts the discussion around the concept of Christian Community during a lesson of the catechumen school in the Catholic Church, where the catechist asked his pupils whether the people had had komuniti in earlier days and, after a period of prolonged silence, an old man from Selni finally said yes, they did, and that the tamberan had been their komuniti. This put the lesson off course briefly but for me, as the anthropologist at work, it highlighted a number of issues I had been working on in the field and which I have tried to describe and analyse in the course of this study. The statement opens a field of contradictions in which new versus old, imported versus indigenous, future versus past, and change versus resilience come to face each other. In ideological terms these positions stand in an anti-thetical relationship to each other, in the realm of practice, however, it becomes evident that social process unfolds as an enduring, recurrent and contested mediation of contradictions. What was the man trying to communicate when he compared komuniti to the tamberan of earlier days? Did he have the same view on komuniti as did the representative of the Catholic Church, did his notion of komuniti convey the same moral and ethical implications as its modern counterpart, did the adherence to the canons of the tamberan produce the quality of social relations which the concept of Christian Community envisaged? Probably not, but what one could read into his statement was that for a man (or a woman) of the older generation the tamberan constituted the all-encompassing parameter on which cultural experience was based and through which meaning was conveyed.

Considering the time and circumstances – the year 1987 – under which the old man drew the comparison his statement was quite provocative since the tamberan was, in general, strongly negatively connotated and regarded as the epitome of kastom, which, for its part, was associated with inequality producing practices and conflict. Thus, in part explicitly, in part implicitly, the small episode addresses the central *leitmotifs* of this study: the interplay between equality and hierarchy, kastom and komuniti, ideology and practice, and through this process, the emergence of social form.

In my approach to, and description of, the Wam social system I rely on some of the ideas and concepts from Anthony Giddens' theory of structuration. The attraction of Giddens' approach lies in the fact that he allots primary importance to the time-space dimension in the formation of social systems and that consciously acting individuals take over a leading role in this process. For Giddens, social systems can be best viewed as recurrent social practices, they are systems of social interaction involving the situated activities of human subjects in the flow of time. The individual agent, or actor, is equipped with considerable knowledge – Giddens distinguishes between what he calls practical and discursive consciousness – concerning the working order of the system he is part of, and he or she mobilises this knowledge in social activities but it is not consciously directed towards reproducing the conditions of the social system; the social form which is produced

and reproduced in the flow of time is an emergent property of human action and interaction, and the order of the social system, its structuration, arises, as a rule, from the unforeseen actions taken by individuals. Action, or agency, is not only ongoing, a continuous flow, it is also recurrent, i.e. it is patterned into habitual shapes or forms and, through this, activities become social practices. The time element is of special significance because it is here that the notion of structure comes in. Every instantiation of action produces something new but, at the same time, all agency exists in continuity with the past which supplies the means of its evolvement. The flow of social interaction thus becomes structured. For Giddens, structure does not denote a model or a form of sets. He prefers to speak of systems having structural, or more precisely, structuring properties, and he defines these as rules and resources that 'bind' time in social reproduction. Resources are either of authoritative or of allocative nature. The former refers to an actor's abilities to generate command over people, the latter to generate command over material objects. Rules – Giddens distinguishes between semantic and normative rules – cannot be described or analysed in terms of their own content but only in conjunction with practices in the moment of their instantiation. Through the recurrent nature of practices, rules acquire the property of principles which are used by actors to comprehend and define identity and situation. Through this notion of structure, Giddens attempts to show how structure is the unintended outcome of the agent's bringing about of effects – his interventions in the ongoing process of events-in-the-world – at the same time as it is the medium through which those effects are achieved. This is what he terms the duality of structure: "By the duality of structure I mean the essential recursiveness of social life, as constituted in social practices: structure is both the medium and outcome of the reproduction of practices. Structure enters simultaneously into the constitution of the agent and social practices, and 'exists' in the generating moments of this constitution" (Giddens 1979:5).

In part I of the study I describe and analyse the working order of the Wam social system on this theoretical background. I distinguish between two dimensions which I term the social mould and the realm of social practice. I do this for heuristic reasons, well knowing that in social reality the two spheres conjoin. The term social mould implies solidity or rigidity but this is not the case here. I understand the term as representing the conceptual parameters within, and through which the social process enfolds. They include the spatial, or settlement, order, the system of kin reckoning and marriage, the lineage system and ritual organization. They all display a very high degree of flexibility and interpretive variability.

The village of Warengeme consists of 60 named hamlets spread over an area of approximately three square kilometres. The stated rule of residence is patrilocal but practice shows a high degree of divergence. Moreover, residence – at least male residence – is to be regarded as a variable of the individual life-cycle development. Men with their families change residence with comparative ease but tend to return to their natal hamlet area towards the end of their life. Intra-village mobility is high whereas there is very little migration to the towns. Population growth is moderately high but in conjunction with the

development of cash-cropping and the limited supply of accessible land resources it is felt as becoming a pressing problem. The modern village is divided into two halves, Warengeme 1 and Warengeme 2. This division is a product of colonial administration. In earlier days, the main entities were the four wards Wolhete and Talkeneme (which make up Warengeme 2) and Warengeme and Wohimbil (Warengeme 1). These constituted the social, political and ritual focus points. The area, the hamlets and the people were oriented towards, and associated with, one of these wards, or kastom ples (*aniher sululepeni*). The boundary between the two village parts is not discernible by eye but it comes to the forefront from time to time in social and political contexts. The inhabitants of Warengeme 2 claim to be the original inhabitants of the Warengeme land but the claim in its totality does not withstand closer scrutiny. The settlement history is a complex field for a variety of reasons. Firstly, because it is difficult to identify the social units – lineages – within which historical movements took place, secondly, because the composition of lineages is hard to discern, and thirdly, because lineage classification is a contested issue and subject to ongoing political manipulation.

Wam lineages constitute descent categories rather than descent groups. The level of corporateness is very low and lineages do not step into collective action. Knowledge concerning lineage affiliation is, in general, very shallow and many an average villager does not know to which category he belongs. There are 32 lines of descent in the village, and the Wam term for these units is *alamel piressi* which translates as 'yam family'. The standard mode of classification uses the imagery of a yam tuber to categorise lineages, more precisely, lineages are represented as constituting different parts of a yam tuber. There are five such terms: *milmbe*, *ereme*, *petule*, *tineme* and *saharampe*. I have termed this as the MEPTS-system. Classification is related to the wards. This means, in theory, that each ward displays a set of *alamel piressi* but co-terminous units of different wards are separate entities, i.e. the *petule* of Warengeme have nothing in common with the *petule* of Wolhete. There is no overt ranking of these categories but in reality the *ereme* category – the middle part of the tuber – is regarded as the least prestigious since, in gardening practice, the middle part is not used for propagation but merely for consumption. Immigrant lineages frequently fall into this category and are classed as *ereme*. Many population segments in the village, however, are not integrated into the MEPTS-system, and quite a few lineages go under different names, such as totem or location names.

The history of the village over approximately the last 130 years is characterised by an ongoing flow of out- and in-migration from, and to, the surrounding area. In reconstructing this process I came to distinguish between three categories: original inhabitants, early immigrants and recent immigrants. Only 35% of the present population rank as original inhabitants, whilst, at least theoretically, 65% belong to descent lines which at one time in the past came to the village. However, the early immigrants (25%) today are regarded as true Warengeme people and their status as immigrants is never addressed, at least not openly. However, this still leaves us with approx. 40% of the population that rank as immigrants. In everyday life this is not felt but in view of population growth and the limited supply of land, it is becoming an issue. The majority of this segment of the

population belongs to Wohimbil, the youngest ward in the village. In earlier times, integration of immigrant families and individuals was effected through marriage, the ritual system, adoption and name bestowal. Names, i.e. ancestral names (*nalel tuhalmbe*), are a significant aspect of the lineage system, since vested rights to land and other resources are lodged therein. Nominally, the orders of inheritance and descent are patrilineal but evidence shows that the transfer of names and estate occurs along quite different paths as well so that an individual might well belong to one lineage by filiation but is factually a member of a second descent category on the basis of enduring rights acquired through name bestowal. Mahaite Ningaha's case described in chapter six shows this clearly.

Marriage within the lineage is, of course, forbidden but the rules of exogamy actually cover a much larger range. The Wam display a classificatory, two-section kinship system which is an emergent property of a system of bilateral cross-cousin marriage. Seen from the angle of an individual the social universe – which extends beyond the village by far and reaches into neighbouring language groups – is divided into an agnatic section, or what I call parallel kin, and a matrilateral/affinal section, which I call cross kin. Parallel kin include people I address as mothers, fathers, brothers, sisters, sons and daughters; father's sisters, mother's brothers, their children, and the children of one's cross-sex siblings fall into the category of cross kin. The ideal marriage partner is a person that is my MB/FZ's daughter or son respectively and, traditionally, the ideal form of marriage was a sister exchange marriage. What at first sight looks like a clear-cut dual order proves in practice to be an intricate and highly flexible system in which individuals as agents possess a high degree of optation and manipulation. What disrupts the clear-cut order – and this is by no means a modern phenomenon – is the fact that the marriage rules were, and are, often flouted, either by a marriage of a man and woman who are classified as brother and sister, or by a marriage that transcends genealogical generations, such as when a man marries a classificatory ZD or FZ. What follows from this is that even men from the same lineage or even lineage segment, i.e. close agnates, have a different rapport to their social environment. Given the quite different predisposition people have towards parallel and cross kin, it is one of the reasons why lineages display a low level or corporateness.

Wam culture finds its most dense form of expression in the secret male cult called *sulu* or, as it is today more often referred to in Tok Pisin, tamberan. It is concerned with the over-arching themes of fertility, growth and strength. One of its most prominent features is the aspect of secrecy. Women and uninitiated boys are strictly excluded from issues concerning the tamberan. The cult consists of three separate stages: *nau*, *nambo* and *kwal*. Entrance into the cult system is either through *nau* or *nambo*, whereas *kwal* ranks as the senior stage. It is regarded as extremely potent and dangerous and is reserved for older men. The last full initiation held in the village was around 1960 in the ward of Talkeneme. The tamberan is based on ward organization and a complex, multilayered dual division, with the men of each ritual half initiating those of the other half, more precisely their sons, into the various stages. Each man possesses at least one ritual exchange partner on the other side of the division. These are termed *pinandil* or kawas in Tok Pisin. Next to these dyads the most important ritual units are the so-called *serengel pinandil*. These consist of

groups of ritual pairs, thus cross-cutting the moiety division. Each group owns and plays a set of sacred trumpets and take over important responsibilities within an initiation cycle. Each ward has four to five such sets. Each set owns a specific song-cycle. The trumpets are named and, as a set, they display clear anthropomorphic features. Thus they can be regarded as representations of the tamberan. Over this a next dual division is laid, again centred on the ownership of a set of trumpets and the corresponding song-cycles. They are termed *ambuli* and *pengame*. They perform various ritual duties at different stages of an initiation cycle but they also take over leading roles during funeral feasts. The pattern that emerges from this triple-layered ritual organization is charactised by the intriguing interplay of opposition and incorporation. It accomodates for both ritual competition – a prominent feature of the tamberan – and for cooperation which is vital in the staging of initiations and ceremonies.

Within the confines of the conceptual framework – the mould – the effective social order is produced and reproduced in, and through, the interaction of its agents. This is the angle I switch to in the second section of the first part of the study and it is here that the two modes of transaction, formal or ritual exchange on the one hand, informal exchange or sharing on the other, come into play. The two modes comply with different rules but they are interlinked. Moreover, they not only come into play as forms of transaction, I describe them as codes of exchange because they reflect basic assumptions about and valuations concerning the people involved on both sides. This demands a second look at the distinction between parellel and cross kin. This dual view of the social universe contains a basic cultural theme, in the sense that the division of, roughly spoken, people on father's side and those on mother's share different properties. The distinction is based on the traditional conception theory which sees a human as being formed of fatherly substance, i.e. semen, which after the formation period in the womb grows on, and is nurtured by, motherly or female essence. This not only relates to the period of pregnancy, it is continued during infancy and childhood. For boys, this affinity to female essence ends with initiation into the tamberan. Thus we have here a basic distinction between substance and sustenance which is by no means only linked to ideas about food and nutrition but is extended by symbolic extension to classify different categories of people. Parallel kin, those one has substance in common with, share the same relational stance in regards to those who rank as providers of nurture, i.e. mother's people, or cross kin. This distinction is never addressed in this unmediated manner, it finds its expression in a differential appreciation of, and habitus towards, different kin types and in differential exchange practices. Whilst agnates/parellel kin – siblingship is probably the most dense form of agnatic relation – comply with the code of sharing and incorporation, cross kin are associated with the practice of formal exchange. Formal exchange refers to the giving and taking of valuables on the basis of reciprocity, which mainly includes pigs, yam, shell rings. Other material and immaterial resources (e.g. land and names) are, under circumstances channelled into the system. Women certainly do not rank as exchange objects but on the basis of the principle of sister exchange marriage they become conceptualised as 'valuables'. The two modes of exchange are closely interlinked because

each event of formal exchange is preceded, and then followed, by acts of informal exchange. These refer to the pooling of resources on the side of the giver prior to the event and their distribution on the side of the taker after the event. One of the main arguments of the study is that an act of formal exchange – although by no means absolutely free of tension – produces equality between the transactors at the same time as it creates and expresses the autonomy of the agent and constitutes the "otherness" of one's exchange opposite. It constitutes a recognition of the singularity of one's counterpart which is a vital prerequisite of granting the other equal standing. Two men who entertain a formal exchange relationship are mutually granting each other the fundamental capacity of growth, strength and prosperity through the provision of highly valued productive and reproductive resources. The code of sharing, on the other hand, implies and generates the notion of undifferentiated incorporation, the belonging to a group of like people. This notion of oneness finds its expression best in the concept of siblingship, whilst on the other side one's affines – *meinheil* which at the same time are one's cross cousins – represent the epitome of equal male relationships.

In ideological terms both sides of the cross/parallel distinction are characterised by positive features – provision of nurturance and incorporation respectively – but in practice the dual division contains a number of contradictions. Whilst cross relations are highly valued and marked by a deep sense of mutual respect they are characterised by social distance and a high degree of formality which makes approach and interaction difficult. On the other side of the divide, interaction is casual and is defined by social proximity and a sense of oneness but in reality this positive valuation gives way to rivalry, contention and jealousy, especially in the important male sibling relationship. An additional strain is added here by the fact that the sibling relationship contains a strong element of hierarchy through the recognition of, and distinction between, elder and younger brother which fundamentally counteracts the claim to equality. Just as much as exchange ranks as a governing principle, agnatic tension and sibling rivalry are strong hallmarks of Wam society. Well over two thirds of conflicts registered during fieldwork were agnatic conflicts.

Exchange also plays a central role in the tamberan but it goes beyond the basic parallel/cross distinction and brings a new dimension into play. One of the key issues of initiation is that the provision of nurturance is taken out of the hands of women and passes into those of men. The tamberan, seen as embodied maleness, takes over the responsibility of creating "men out of boys" and, in consequence, the opposite ritual moiety takes over the role of providers of sustenance, so that a new cross division is effected. In the seclusion phase of initiation, the initiates are opulently fed – fattened would be more appropriate – by their kawas on either yam (*nau* stage) or pig (*nambo* stage) so that their bodies become saturated with 'male' food whilst at the same time they are introduced to blood-letting on the penis in order to get rid of the female essence they still carry in their body. In the *kwal* stage emphasis is no longer so much on food ingestion but on knowledge acquisition through the disposure to imagery. An initiation cycle ends – usually many years after actual initiation – in climactic exchange feasts in which kawas, with the support of helpers,

engage in competitive food exchanges with each other. These events are marked by a high degree of ritual aggression but this masks the fact that the principal actors really regard each other as close allies and partners. Both within and outside the tamberan cycle they provide each other with valuable sustenance. Thus, for instance, when a man kills a pig while hunting he gives it to his kawas and they also grant each other plots in their gardens. As one man said to me: "You white people have refrigerators, we have kawas!" The aim in these *pinandil* feasts is not to outclass and shame one's kawas but to demonstrate one's worthiness and male quality to the witnessing public. The ability to amass and present large quantities of yam and pigs demands the command over one's supporters within the same moiety – the poolers of resources – and it is at this stage that men have to prove their strength and calibre as autonomous and effective agents.

The hallmark of a big man is that he can take on several ritual exchange partners at the same time which, in turn, means that he has to have the power to motivate and mobilise a large number of, possibly reluctant, supporters who have their own aims and plans and their own status and autonomy to think about. What makes equality so competitive is not the actual practice of formal exchange but the preceding stage of organising and pooling resources from within one's social network. Such factions are stable and reliable at the core but the larger they get the more difficult they become to control. Competition and danger for traditional big men did not so much come from established and acknowledged rival big men from other wards but from ambitious and aspiring men from within their own factions and, within these factions, from the agnatic segment. A review of the fate of Wam big men over the last sixty years shows a recurrent pattern: at one stage or another they were cut down to size again, either by the use, or threat, of *arukwineme* sorcery or by equally damaging accusations of sorcery. The Wam were, and still are, prepared and willing to accept ascendancy and pre-eminence of single individual actors as long as it does not lead to domination or subjugation. On the one hand the act of formal exchange and the act of sorcery form absolute opposites, since exchange is associated with provision of nurturance and strength whilst sorcery weakens and finally kills the body. But on the other hand, and in terms of overall social effect, they also show common properties since they both work towards balancing equality. The one operates as the regulative force of the other.

Although men and women are located in the framework of kinship, lineage and ritual organization which provide a baseline through which they are able to define themselves in relation to others, these positions are not fixed. All individuals enjoy a high degree of optation and it is through the mechanism of exchange (both formal and informal) that the Wam are able to convert categories and transform nominal linkages into meaningful relationships. In view of the absence of any form of centralised institutions of authority and of the fact that the lineages do not operate as corporate descent groups, the concepts of exchange and reciprocity actually become the central principles upon which social form is based, human experience structured and cultural meaning derived. The fluidity and flexibility of the system/practice becomes markedly evident in the field of marriage. Many marital unions run contrary to the canons of the stated rules of marriage and although

people might comment on the practice in a negative manner, 'wrong marriages' are not prevented by the families of those concerned. Significantly, it is the women who often take the initiative in marriage – usually in the form of eloping for good to the future husband's hamlet – and it is then left up to the men, i.e. the brothers and affines, to sort out the transactional aspects of the marriage and to formulate an accountable version of the event which upholds the appearance of male dominance. It is in such and other, similar, cases that the conceptually separate spheres of exchange become merged and, for instance, the compensation of a sister who has married elsewhere is offset by a pending ritual debt, or by a name transfer, or by the granting of land rights. The critical issue is that, in the long run an overall balance between the interacting sets is retained. Exchanges always centre on the pivotal issue of the provision of life-sustaining nurturance. What form in the end this provision takes on is of secondary significance. A marriage not only initiates an exchange event, or a series of such events, it also has ramifications for the classification of kin and it forces the kinfolk in the social proximity of the event to, at least partially, redefine and adjust their rapport to each other. Thus a (classificatory) brother-sister marriage will mean that men the husband previously called *nauwie* (brothers) will become affines, *meinheil*, and that the father and mother of the wife will change their status from *agel* and *ni* to *agel hauneil* and *ni ananei* (WF = MB and WM = FZ). Kin conversion through what I have termed code supplementation, however, is nothing unusual among the Wam. The most frequent case is when two cross cousins, *meinheil*, over time develop such a close and strong bond between each other/them that they come to reclassify themselves as brothers. They do this without forfeiting the positive aspects of the conventional habitus that governs the *meinheil* relationship, at the same time they incorporate the positive features of siblingship. The best of both worlds, so to speak. When two classificatory brothers wish to strengthen their bond they often enter into a ritual exchange relationship and become kawas. What I want to point out here is that meaningful relationships have to be selected, brought to life and continually nurtured and sustained through interaction. On average, an individual's range of such meaningful relations includes as many "pregiven" (on the basis of genealogy) close relationships as it does initially more distant ones which have been converted to significant ties through the application of the corresponding code. In effect, it is practice that generates brothers, sisters, fathers, mother's brothers, affines, and the like, while, at the same time, the generative moment is governed by the habitus incorporated in the appropriate code. The given pattern of kinship relations a person is born into only represents a set of potentialities. It is up to the individual himself in the course of his life to select, bring to life, form, shape, transform, or curtail relationships.

Given this fluidity it is difficult to speak of the social order as displaying a clear and definite structure. Moreover, social form evolves in the flow of time through recurrent action which becomes manifest in the instantiation of interaction. Naturally, there is a myriad of such moments which in their totality contribute to the shaping of the effective social form but some of them are more significant and consequential than others. These moments I have termed social events and in the course of part one of the study I show how these events render the social process its structuration. Pivotal here are such events which

involve acts of formal exchange as encountered, for instance, on the occasion of marriages, death payments and ritual activities. They constitute incidents in which conscious, knowledgeable and purposeful individuals act and interact. They involve transactions of goods and valuables, interaction through words and speech, but also moments where antagonism and conflicts can become manifest. Breaking down this flow into single bounded events is rather like structuring the colour spectrum and defining its various shadings as distinct colours. Such events not only effect things, they convey meaning at the same time. In such moments actors express their valuations, expectations and sentiments which contain messages about how the actors involved judge the present situation. What is of even more critical significance is that events constitute precedents upon which actors not only evaluate the given situation, but which actually condition future action and which define the relationship between the actors involved from then on or, at least, until a subsequent event possibly redefines that relationship.

Exchange events constitute the generative moments of the process of social structuration. They are the pivots of the social process and, as such, represent both the medium and the outcome of practices. Just as much as groups centred on single actors – the principal exchangers in the event – step into action, the event itself creates action sets and defines the relationship between those involved. It can confirm an existing relationship according to the cultural codes but it can just as likely transform a rapport as the case studies in chapter six clearly show. All individuals are engaged in numerous such events, either as principal actors or as secondary agents. Equipped with the necessary knowledge and applying the rules and resources at their disposal, individuals go about building and shaping their networks of meaningful relationships whilst at the same time they become enmeshed in those of others. The background on which this process enfolds are the central, but also contradictory, cultural themes of autonomy and incorporation, i.e. defining one's individuality and personhood whilst at the same time being part of a social formation, and equality and hierarchy, i.e. establishing and affirming one's status in view of the expectations of others and the ongoing competition between those with whom one supposedly shares so much in common: one's siblings.

In the second part of the study I move on to describe and analyse the process of change in the village, more specifically how the Wam have reacted to, and acted on, the process of encapsulation as I define the relationship between the village world and colonial and post-colonial order. This is marked by a shift in the location of formative power, i.e. the Wam have to a certain extent lost the control, or ability, to shape their own destiny and have become dependent on mechanisms and forces which lie beyond their reach. Although this second part of the study runs under the heading of change it would be more precise to say that the focus is really on the interplay between pervasive change and cultural resilience. The Wam never actively opposed the establishment of colonial rule and the changes this brought to their way of life. On the contrary, they welcomed novel ideas and institutions and, at times, enthusiastically took up new concepts and practices the colonial system offered, which, however, does not mean that the process did not have, and is not having, fundamental effects on the working order of the Wam social and cultural system. The

people, of course, notice and realise this but they put it down to different causes, more precisely, different segments in the village locate the causes in different contexts, which in itself contributes to the contradictory dynamics of the discourse on change. This discourse hinges on the two key concepts of kastom and komuniti. The former refers to the past and traditional culture in its totality, the latter denotes an envisaged cultural and social form to be achieved through modernisation and transformation, which is characterised by sustained prosperity, social harmony and true equality, both within village society and in relationship to modern Papua New Guinean society in general. While everybody, naturally, agrees on this common aim, there is no agreement on how this aim is to be reached. The two terms become slogans which the differing factions use to justify their own position and strategy and condemn the activities of the others. The fields where this conflictive discourse becomes most evident are the two main change movements in the village, on the one hand the bisnis movement and on the other the millenarian movement which operates under the guise of the New Apostolic Church.

The forces of change the Wam have faced and have had to contend with are varied. They include political, economic, educational and religious forces which began to enfold at different times and with varying intensity but they were, and still are, of course, systemically interlinked, e.g. the spread of Western education was tied to the proliferation of Christian missions just as the growth of cash cropping was linked to the efficacy of colonial administration. The synthetic effect of the forces of change has led to a gradual re-orientation of individual and collective goals and values, a re-evaluation of the social universe and the ontological status of the experienced world. It makes no great sense in grading these forces on the basis of the effect they have had. They work in unison. But what has certainly had significant impact in the field of social formation is the monetarization of the economy, mainly through the introduction of cash cropping since the sixties, as this has had ramifications for the principle of exchange. In fact, monetarization has unleashed a chain of effects. Against the background of gradual demographic changes and the fact the total supply of land is limited, extensive cash cropping has led to rigidification of the land holding system. More and more acreage is being put under coffee (and more recently cacao) with the effect that not only the land used for subsistence gardening is diminishing and, thus, speeding up the fallow rotation system, but also that there is less and less surplus land which can be channelled into the traditional land transfer system. In addition, and in view of population growth, the stock of ancestral names has been used up, which in earlier times was a method frequently used for granting land rights to individuals beyond the range of the descent lines, usually to matrilateral, i.e. cross relatives, and thus building up meaningful relationship networks. Whilst patrilinearity used to be more an ideological tenet it is today becoming a formative principle. Young men on the verge of marriage and setting up household are increasingly forced to look towards their fathers and own lineage mates when asking for land. Whilst earlier the practice of granting land to cross relatives fortuitously served to reduce agnatic tension, competition between agnates for basic resources has markedly increased. The segment hit most by this slow but growing shortage of land are the people belonging to recent immigrant lineages.

As I remarked above, this is approximately 40% of the present population. A majority resides in the ward of Wohimbil. Firstly, this has had the effect that a rift between 'true' Warengeme people and immigrants has become more manifest, and, secondly, that a movement has set in which the people define as painim stori, i.e. finding the story, meaning the story of origin. What this means is that men of immigrant lines have begun to trace back their history of migration and are attempting to claim land and residence rights in their places of origin. The movement that set in approximately in the mid-eighties has become stronger in recent years. On my last visit in 1996, a number of families had actually left the village and gone back to where their forefathers had once come from – amongst them the former councillor Gista Happali from the Womsok line (P1) – others had begun building houses and planting coconut and sago palms in their old/new residence areas whilst others again were still in the process of "finding their true story". A method of bypassing this hazard is the manipulation of lineage affiliation, i.e. claiming affiliation through descent or name bestowal to an original Warengeme lineage. Many attempt to do this, only few succeed but it has had the effect that the people are retrieving and safeguarding the ancestral names of their lineage more closely. This has also raised consciousness about patrilineal filiation without, however, increasing the degree of lineage corporateness.

Increased cash crop production also puts strains on the people's time management. Whilst traditionally gardening and hunting used to be the men's main and identity constituting activities – in combination with the tamberan – today people's central attention is on cash cropping. The Wam have turned to a slim subsistence production which leaves neither room for surplus production nor for the intensive cultivation of ceremonial yam. Pigs have practically vanished from the village because the people claim they have neither the time nor energy to build fences around their gardens any longer *and* invest time in coffee production. What this means for a social order based on exchange is that the principal value objects – pigs and yam – on which the whole matter essentially hinged have been taken out of the system. This process of erosion of formal exchange goes hand in hand with the spread of Western education and knowledge and religious conversion to the effect that the formerly central ritual institution of the tamberan has become redundant. The people say that they simply do not have the time and the energy to keep the ritual system going, which, to a large extent, is certainly true but the tamberan has also lost a great deal of its ontological explanatory power in view of alternative world models. The same is also true for the traditional conception theory which is the basis for the social design. This has led to a revaluation of the traditional kin categories in the sense that to an increasing degree siblingship has been redefined and that cross cousins are no longer distinguished from parallel cousins (which were equated with siblings) but that cousins in general are distinguished from real siblings. This, in turn, again strengthens the principle of patrilinearity. Today, more and more often father's brothers are termed uncle, and mother's sisters aunties. Many young people today regard marriage between immediate cross cousins – the traditional ideal – as incestuous. Thus, the logic of sister exchange marriage in all its variations has also been undermined. Marriage partners, the

villagers maintain, should come from more distant segments than the immediate matrilateral kindred. Moreover, although sister exchange still forms a model of marriage, all marital unions today are based on the payment of bride wealth. The range is between 500 and 1000 Kina with very strong inflationary tendencies, and young men wishing to marry but yet without the necessary financial autonomy find it hard to meet these expectations. Usually a small down-payment is made while the rest is never fully paid. As a consequence, future affines raise the price from the start so that at least they receive a higher down-payment. Marriage, thus, has become a contentious issue. As the case of Anisi's funeral shows, described in chapter twelve, funerals too put the people before grave problems because ideological pledges to modernity run up against customary practices and expectations. Although the people openly state that they no longer favour the practice of reciprocal death payments between the agnates and segments of the deceased's cross relatives, implicit expectations still go in this direction and force the deceased's agnates to act accordingly. And since there are no pigs left in the village, these have to be brought in from the surrounding area and paid for by money, which not only puts an extra strain on the financial resources of those concerned but also raises the conflictive properties of funerals.

The curtailment of formal exchange hits the working order of the traditional social system at its pivots. Based on the idea of the provision of nurturance and on the basis of reciprocity, formal exchange events constituted the integrational forces within the social system. They were the hinges around which complex and laminated relationship networks emerged, expanded and contracted again. The quintessence of social formation lay in the act of doing and becoming through ongoing and recurrent social interaction and by applying the knowledge and the codes the cultural system offered. This by no means excluded the elements of friction and antagonism. Conflict was an integral part of the system and acted as a regulative force which, in the long run, sustained a balance.

Today, the basis of the social order is a stipulated ideological like-mindedness which rests on three pillars. These relate, firstly, to the fundamental doctrines of the Christian faith as purported by the various churches, secondly, to the authority of the law and other institutions set up and promoted by the state and, thirdly, to, in its essence, a capitalistic economic system. This basic profession to modernity, however, in no way means that the villagers are content with the way the modern system is put into effect. Protest comes in various forms from different segments but what all factions agree on is that the traditional way of life, kastom, has outlasted its days and is not a viable alternative. Here we find a marked difference from other parts of Papua New Guinea and island Melanesia where custom and tradition are regarded as an essential basis of identity and a cultural resource or where, at least, people attempt to blend the different properties of the two systems. Notions of kastom among the Wam are overshadowed by the only legacy the past and the tamberan appear to have left behind, and that is sanguma sorcery. The prevalence of death and illness which, in the final analysis, are always put down to sorcery is evidence for the people that many individuals have not relinquished a kastom habitus in spite of pledges to the opposite, and that spite and jealousy have become more prominent. The notion of

komuniti is the postulated ideal of a modern form of living. It denotes undividedness of, and harmony within, the village as a modern social entity in which co-operation and solidarity prevail and, thus, in essence, it resembles the ideological tenet of siblingship and other agnatic relationships. Returning to metaphorical parlance, sharing is promoted as the dominant code of interaction in the village, whilst the provision of nurturance is delegated to the agencies of encapsulation, that is mainly the state and its institutions. Nurturance should come in the form of government services like education, health, the law or the building of roads and price stability for their cash crops. Experience has shown that the outside agencies have failed to render these services, at least, the people see them as having failed since, in their own evaluation, they have had little impact on village life and have not led to a marked betterment of conditions. This has led to increasing disillusionment with the encapsulating system and the relationship is regarded as increasingly being tinged by the element of hierarchy, a growing rift between a small, dominant elite of Papua New Guinean politicians and businessmen in alliance with foreign companies and finance and the general population which is becoming more and more marginalized, and between rich towns and poor rural areas.

The ideal of komuniti runs up against experienced reality in a similar way as agnatic ideology and practice do. In the view of competition, equality is something all are quick to demand but few are willing to grant. This has not changed, but whereas in earlier times equality was the unintended outcome of social action and interaction it is today a postulated prerequisite for social action and a moral precept on which social interaction is modelled. The erosion of formal exchange and the curtailment of the ritual system has also brought about a shift in the locus of the formation of power. Power is no longer generated within a system of exchange and no longer finds its manifest expression in the form of food prestations – valuable nurture which flows back into, and feeds, the system – it is linked to the opportunities and resources that the encapsulating system provides. In the main, these refer to positions within the political or, to a lesser extent, the ecclesiastical order. The status of modern big men demands new forms of knowledge, capacities and networks whilst at the same time, rhetorical skills and the ability to motivate and mobilise others are still needed. Notably, big men are still subject to the dangers of sorcery, either that they are, or feel, threatened by sorcery, or that they become the victims of sorcery accusations. The description and analysis of the bisnis movement in the last section of the study contains a detailed portrait of the rise of a young big man, Alex Anisi, the strategies he applies in the process but, also, the difficulties and the adversity he faces, notably from the agnatic segment of his network.

Collective action, today, takes place within, and is shaped by, the two change movements in the village. I call them change movements because they have grown out of the process of change and because it is transformation and modernisation – however this is understood – they are aiming for. On the one hand, there is the so-called bisnis movement, on the other, the millenarian movement. The bisnis movement is centred in Warengeme 2, whilst the millenarian movement is strong in Warengeme 1. There is, however, a considerable degree of overlapping.

The millenarian movement comes under the guise of the New Apostolic Church (NAC), an ecclesiastical organization which appeared in the area in the early eighties. The official NAC is itself eschatologically oriented and expects the return of Christ in the near future. This is certainly a point which made the new church attractive to many people in the area and which allowed it to make ground quickly. The movement in the village is based on a fusion of Christian ideology, traditional mythology and concepts and ideas taken from earlier movements in the Sepik area, such as the Peli Association of the seventies. Out of these elements and from the interpretation of pamphlets and books distributed by high-ranking NAC visitors, some of them from overseas, a millenarian world-view has been constructed. It offers explanations for the present world order, for previous failures to change this order and, of course, for what the near future holds. The central messages refer to the impending arrival of Christ in Papua New Guinea in the person of the NAC Chief Apostle, the reunion of the Wam with their ancestors, who are, at present, believed to be residing West Papua, and the coming to power of Bernard Narokobi and the Melanesian Alliance Party and the ousting of the old political class in Papua New Guinea that has over the last twenty-five years wilfully been misleading and exploiting the people. When the day arrives it will ring in a new era where true equality and affluence reign. The key word here is 'freedom'. It refers not only to economic and political constraints but also to the nature of relationships within the village which today are still regarded as being dominated by antagonism, jealousy and conflict. The images of future life in the village are still quite shady but it is significant that the people, more precisely the leaders of the movement, envision a new settlement order where fathers and sons and younger and elder brothers live closely together and in absolute harmony. The concept of 'freedom' is actually congruent with the ideal of komuniti.

The NAC movement has a number of elements in common with earlier millenarian movements such as the Peli Association but it differs in some important points. Thus, whereas Peli was a manipulative movement and displayed strong thaumaturgical characteristics, the NAC, in contrast, could be described as a conversionist movement. What this means is that whereas the Peli followers, centred on the prophetic figure of Mathias Yaliwan, still believed that they could change or, at least, influence the course of events in the world through performing the proper rituals and initiating action, none of these aspects are encountered in the NAC movement. There is nothing overtly millenaristic about the NAC. Action is focused mainly on church activities and the more eschatological elements are cached in allusions and word-imagery. The followers of the NAC do not believe that through their action they can influence or alter the course of coming events. They can only adapt to the prerequisites of a future existence, not by trying to establish control over external processes, as was still the case in the Peli movement, but by effecting transformation within their own society, and by adopting a new cultural form, and becoming new moral beings. The return of Christ, to them, is certain and imminent, and with his return a state of eternal affluence, bliss and equality will commence. The critical question is whether the Wam by then will have been able to shed the shackles of kastom

and adopt a new form of social and cultural existence, komuniti, where competition, conflict and hierarchy have been replaced by respect, brotherly love and true equality.

This is the one side to the NAC movement, there is, however, also a second side to it and this sees it as a strong political faction in the ongoing power game within the village. Common belief and hope aimed at the near future are strong integrational forces within the movement, an equally salient feature, however, is the adversity against other factions in the village. One of these factions is focused on the elected leaders of the village, i.e. the councillor, the village magistrate and the member of the Provincial Parliament, a second, very strong faction is represented by the bisnis movement from Warengeme 2. Just as the NAC church has two sides to it – one religious and the other political – so does the bisnis movement display a dual appearance. As the name implies it has a strong economic dimension, on the other hand it effectively operates as a support group for the principal figures at the core of the movement. These are the two brothers Gerry and Alex Anisi who both returned to the village in the mid-eighties after longer stays in other parts of the province and country respectively. Their stated goals were to promote development and change in the village through innovation and novel forms of organization. The implicit aim of especially one of the brothers, Alex Anisi, was a political career which was to begin in the village and end in the field of provincial and national politics.

The growth of economic collective enterprise in the village over the last thirty to forty years has been marked by a process I would call expansion and contraction. By this I mean that the various village organizations which have come into existence in succession have, after a more or less short phase of enthusiasm and success, not been able to sustain activities and have folded up again quickly, only to be replaced by an even larger, more ambitious organization shortly afterwards. The failure of these different enterprises is almost invariably put down to internal strife and tensions between different segments. This certainly is one of the reasons but it has to be seen against the background that, in the end, the organizations were lacking clearly formulated and, above all, realistic aims. The people's expectations were usually miles ahead of the group's potential.

Business groups, youth groups and village cooperatives commonly display a Western style organizational structure with an elected leadership body, a written constitution and a set of ground-rules but although these are symbolically very significant they prove ineffective in the field of practice. The only enterprise that displayed any consistency and durability was the group that went by the name of Tilli Brothers, or Tilli Bros. It too boasted a modern style organizational structure but in effect it relied heavily on more traditional mechanisms lodged in the network of reciprocal affiliations and obligations. Tilli Bros constituted the dynamic core of the complex and laminated Bisnis movement. The architects of this core group were the two brothers Alex and Gerry Anisi and the history and fate of the movement as a whole is very much tied up with the relationship pattern at the core of Tilli Bros which included, apart from Alex and Gerry, also their elder brother, Andrew, and a few other close supporters. The interplay between cooperation and sibling rivalry in conjunction with the differing motives and strategies of the principal actors were decisive factors in the development of the movement. Gerry and Alex

occupied complementary fields in the movement – the former was more economically minded, the latter more politically oriented – and were, with a few notable exceptions, able to curb their rivalry and to work together but the relationship between Alex and his elder brother Andrew proved a constant strain and open conflict was often only avoided through the intervention and mediation of influential cross relatives. This is actually the traditional pattern of conflict resolution.

Tilli Bros itself actually developed very little economic activity but it radiated the aura of being a dynamic and successful enterprise. This boosted the status of its main protagonists and formed a sound operational basis for the formation of other ventures. One of these was Wotal Youth Group which in the mid-eighties became the active arm of the Bisnis movement. It was Alex's brainchild and through Wotal he was able to capture and mobilise the support from many segments of the village. With the help of his close supporters from Tilli Bros, Alex went on to found the Aresili Youth Sports Association, which the youth groups from all the surrounding villages of the area joined. A soccer championship for the men and a volleyball championship for the women was organised and ran successfully, at least for a few months. In none of the organizations did Alex take over an official position. He remained in the background and left the operational side to others. In the early phase of bubbling enthusiasm, which lasted several months, many a bold new development project was thought up and elaborated on but in the course of time optimism began to wane and youth activities gradually subsided again. It became apparent that Wotal was facing a serious identity problem. Like other bisnis ventures, Wotal boasted a Western style elaborated organizational structure but this could not hide the fact that it was lacking clearly formulated, realistic aims as well as long-term objectives and that the members' commitment to the group as such was very low. In fact commitment was very much more personalised and directed at the figures of Gerry and, especially, Alex. The blame for Wotal's ailments, on the other hand, went to the elected leaders and did not affect Alex's standing.

Alex then reset his objectives and became involved in official politics on a larger scale. After first serving as a campaign manager for someone else he became the official Melanesian Alliance Party candidate for the 1987 National elections. He lost by only a very small margin but, encouraged by the good result, he decided to put up for the Provincial elections the same year. His main rival in the Wam-Urat constituency was Kani Happali from Warengeme 1, the sitting member. Being the official MA Party candidate he was able to draw the vote of practically the entire NAC community – not only in his own village but in the entire area – and this gained him a secure victory. He was nominated Provincial Minister of Education and approximately eighteen months later, when the Premier Bruce Samban was removed from office due to severe misconduct, Alex was elected Premier of the East Sepik Province. Alex had achieved his aims within a matter of four years.

Alex's nomination as Minister of Education raised expectations to an even higher pitch. The villagers interpreted his position as a direct link to a centre of power within the encapsulating system through which the village would overcome its marginal status and, in

due course, become a major player in the area. Direct benefits were expected to come in the form of improvements to the regional infrastructure, namely, new and better roads, easier access to government funding sources and the launching of ambitious, large-scale development projects. Even the establishment of a new High School for the Dreikikir area on Warengeme territory made the rounds. Alex was neither able, nor willing, to fulfil these high-flown expectations and, factually, nothing changed to the status quo in the village. The only changes noticeable concerned Alex himself. After his victory he began clearly to disassociate himself from his fellow villagers and mark a definite status distinction. This became apparent in his conduct towards the people, in his speech behaviour and the issues he addressed, and in his food habits. He severed ties to former allies and supporters – expecially the leaders of the NAC – and generally became less accessible. Concomitantly, he became more suspicious and displayed an increased fear of sorcery. No doubt, Alex had achieved the status of a modern big man – in reference he was spoken of as 'big man' and especially younger people often addressed him as 'boss'. He was approached with awe and certainly wielded a certain degree of power – namely in Giddens' sense that he was able to make his account count – but his change of status had also alienated him from his background. Whilst, previously, he had held a pre-eminent position, now a distinct element of hierarchy had entered the relationship. His votum no longer came over as a motivation but as a command, just as he no longer addressed the people as yumi Wam but as pipel bilong mi. He had distinctly joined a different league in the power game.

In the field of village collective enterprise this had repercussions. Wotal Youth Group, which had hoped to profit from Alex's victory, broke down completely and split up into a score of smaller groups. Significantly, the break-up displayed a distinct pattern in the sense that it split sibling groups and that the new groups were based on affinal, i.e. cross alliances. Two of Alex's siblings tried to take over and reanimate Wotal but with no success after it became apparent that they were trying to manipulate the organization for their own benefit. The suggestion to reform the youth group under the guise of Tilli Bros was rejected on the basis of failing trust in the milieu of Alex and Gerry.

Thus, the next collective enterprise had not been able to be sustained. The threatening fragmentation of the Bisnis movement was counteracted once again according to a familiar pattern, i.e. through the establishment of a next, even larger enterprise. This refers to the Miyeme Development Corporation which was devised as a regional association of village business and youth groups through which the people of the Wam, Urat and Muhiang areas would be able to market their cash crops and thus gain independence from the two large corporations operating in the East Sepik Province. The MDC was Gerry's brainchild. On the occasion of the founding meeting it became evident that various village groups showed interest in the project but on the condition that Alex was not to play a leading part in the enterprise. Significantly, the biggest opposition to any involvement of the successful politician came from the people of Warengeme.

BIBLIOGRAPHY

Ahmed, A. S .

1980 *Pukhtun Economy and Society. Traditional Structure and Economic Development in a Tribal Society*. Routledge and Kegan. London, Boston, Henley.

Allen, B.

1976 *Information Flow and Innovation Diffusion in the East Sepik District, Papua New Guinea*. Unpublished Ph. D. Thesis. Australian National University. Canberra.

1990 The Importance of Being Equal: The Colonial and Postcolonial Experience in the Torricelli Foothills. In: N. Lutkehaus et al. (eds.) *Sepik Heritage. Tradition and Change in Papua New Guinea*: 185-196. Carolina Academic Press. Durham.

Allen, M.

1984 Elders, Chiefs and Bigmen: Authority Legitimation and Evolution in Melanesia. *American Ethnologist* 11: 20-44.

Barnard, A. and Drew, P.

1984 *Research Practices in the Study of Kinship*. ASA Research Methods in Social Anthropology 2. Academic Press. London.

Barnes, J.

1962 African Models in the New Guinea Highlands. *Man* 62: 5-9.

Barth, F.

1966 *Models of Social Organization*. Royal Anthropological Institute of Great Britain and Ireland, Occasional Papers 23.

Bartlett, J.

1971/72 Up-date Area Study. *Dreikikir Patrol Report*, No. 7. Unpubl. Report. National Archives of Papua New Guinea. Port Moresby.

Bateson, G.

1936 *Naven. A Survey of the Problems Suggested by a Composite Picture of the Culture of a New Guinea Tribe Drawn from Three Points of View*. Cambridge University Press. Cambridge

Berreman, G. D.

1978 Scale and Social Relations. *Current Anthropology* 19: 225-247.

Beteille, A.

1986 Individualism and Equality. *Current Anthropology* 27: 121-128.

Boivessain, J.

1968 The Place of Non-Groups in the Social Sciences. *Man* 3: 542-556.

Bourdieu, P.

1977 *Outline of a Theory of Practice*. Cambridge Studies in Social Anthropology 16. Cambridge University Press. Cambridge, London.

Bowden, R.
1983 *Yena: Art and Ceremony in a Sepik Society*. Pitt Rivers Museum, University of Oxford. Oxford.
1987 Sorcery, Illness and Social Control in Kwoma Society. In: M. Stephen (ed.) *Sorcerer and Witch in Melanesia*: 183-208. Melbourne University Press. Carlton.
Brenneis, D.
1988 Language and Disputing. *Annual Review of Anthropology* 17: 227-237.
Brenneis, D. and Myers, F.
1984 Introduction: Language and Politics in the Pacific. In: D. Brenneis and L. Myers (eds.) *Dangerous Words: Language and Politics in the Pacific*: 1-29. New York University Press. New York, London.
Briggs, J.
1970 *Never in Anger*. Harvard University Press. Cambridge.
Brison, K.
1988 *Gossip, Innuendo and Sorcery: The Importance of Ambiguity in Kwanga Funeral Discussions*. Unpublished Paper.
1989 All Talk and No Action. Saying and Doing in Kwanga Meetings. *Ethnology* 28: 97-115.
1992 *Just Talk: Gossip, Meetings and Power in a Papua New Guinea Village*. Berkeley, University of California Press.
Brown, P.
1962 Non-agnates among the Patrilineal Chimbu. *Journal of the Polynesian Society* 71: 57-69.
Burridge, K.
1959 Siblings in Tangu. *Oceania* 30: 128-154.
1960 *Mambu: A Melanesian Millennium*. Methuen and Co. Ltd. London.
1975 The Melanesian Manager. In: J. Beattie and R. Lienhardt (eds.) *Studies in Social Anthropology*: 86-104. Clarendon Press. Oxford.
1979 *Someone, No One. An Essay on Individuality*. Princeton University Press. Princeton.
Camp, Ch.
1983 The Peli Association and the New Apostolic Church. In: W. Flannery (ed.) *Religious Movements in Melanesia Today, Vol. 1*: 78-93. Point Series No. 2. The Melanesian Institute. Goroka.
Carrier, J.
1984 Education and Society in a Manus Village. *Educational Research Unit, Research Report 47*. University of Papua New Guinea. Port Moresby.
Clay, B.
1977 *Pinikindu*. University of Chicago Press. Chicago.
Codrington, R.H.
1891 *The Melanesians*. Clarendon Press. Oxford.

Cohen, A.
1985 *The Symbolic Construction of Community*. Ellis Horwood. Chichester, Tavistock, London, New York
Conroy, J.
1976 *Education, Employment and Migration in Papua New Guinea*. Development Studies Centre Monograph No. 3. Australian National University. Canberra.
Daimoi, J.
1976 A Sanguma Man of the Sepik. *Oral History* 4. 3: 53-56.
Danks, B.
1887 On the Shell Money of New Britain. *Journal of the Anthropological Institute of Great Britain and Ireland* 17: 305-317.
Doolan, L. J.
1950 Patrol Wam-Labuain 5.6.50 - 13.9.50. *Dreikikir Patrol Reports*.Unpubl. Report. National Archives of Papua New Guinea. Port Moresby.
Dumont, L.
1970 *Homo Hierarchicus*. University Chicago Press. Chicago
Eggenberger, O.
1983 *Die Kirchen, Sondergruppen und Religiöse Vereinigungen: ein Handbuch*. Theologischer Verlag. Zürich.
Ekeh, P.
1974 *Social Exchange Theory*. Heinemann. London
Errington, F. and Gewertz, D.
1987 *Cultural Alternatives and a Feminist Anthropology*. Cambridge University Press. Cambridge.
Evans-Pritchard, E. E.
1937 *Witchcraft, Oracles and Magic among the Azande*. Oxford University Press. Oxford.
Firth, R.
1957 Factions in Indian and Overseas Indian Societies. *British Journal of Sociology* 8: 291-342.
Flanagan, J.
1988 The Cultural Construction of Equality on the New Guinea Highlands' Fringe. In: J. Flanagan and S. Rayner (eds.) *Rules, Decisions, and Inequality in Egalitarian Societies*: 164-180. Avebury. Aldershot, Brookfield, Hongkong.
1989 Hierarchy in Simple "Egalitarian" Societies. Annual Review of Anthropology 18: 245-266.
Forge, A.
1967 The Abelam Artist. In: M. Freedman (ed.) *Social Organization: Essays Presented to Raymond Firth*: 65-84. Cass. London.
1970 Prestige, Influence and Sorcery: A New Guinea Example. In: M. Douglas (ed.) *Witchcraft, Confessions and Accusations*: 257-275. A.S.A. Monograph 9. Tavistock. London.

1972 The Golden Fleece. *Man* 7: 527-540.

Fortes, M. and Evans-Pritchard, E. E.

1940 Introduction. In: M. Fortes and E. E. Evans-Pritchard (eds.) *African Political Systems*: 1-23. Oxford University Press. London, New York, Toronto.

Foster, R.

1992 Commoditization and Emergence of Kastam as a Cultural Category: A New Ireland Case in Comparative Perspective. *Oceania* 62.4: 284-294.

Franklin, K.

1967 Names and Aliases in Kewa. *Journal of the Polynesian Society* 76: 76-81

Fried, M.

1967 *The Evolution of Political Society*. Random House. New York.

Friedman, J. and Carrier, J. (eds.)

1996 *Melanesian Modernities*. Lund Monographs in Anthropology 3. Lund University Press. Lund.

Galwyn, D. R.

1972/73 Investigation of Religious Activity. *Dreikikir Patrol Report*, No. 4. Unpubl. Report. National Archives of Papua New Guinea. Port Moresby.

Geertz, C.

1975 Ritual and Social Change: A Javanese Example. In: C. Geertz *The Interpretation of Cultures*: 142-169. Hutchinson and Co. London.

Gerritsen, R.

1981 Aspects of the Political Evolution of Rural Papua New Guinea: Towards a Political Economy of the Terminal Peasantry. In: R. Gerritsen; R. May; M. Walter *Road Belong Development. Cargo Cults, Community Groups and Self-Help Movements in Papua New Guinea*: 1-60. Working Paper 3. Department of Political and Social Change. Australian National University. Canberra.

Gerstner, A.

1939 Der Yams-Anbau im But-Bezirk Neuguineas. *Anthropos* 34: 246-266.

1963 Der magische Meuchelmord im Wewak-Boikin Gebiet (Nordost-Neuguinea). *Anthropos* 58: 719-736.

Gesch, P.

1985 *Initiative and Initiation: A Cargo Cult-Type Movement in the Sepik against its Background in Traditional Village Religion*. Studia Instituti Anthropos 33. St. Augustin.

Gewertz, D.

1984 Of Symbolic Anchors and Sago Soup: The Rhetoric of Exchange among the Chambri of Papua New Guinea. In: D. Brenneis and L. Myers (eds.) *Dangerous Words: Language and Politics in the Pacific*: 192-213. New York University Press. New York, London.

Giddens, A.
1976 *New Rules of Sociological Method: A Positive Critique of Interpretative Sociologies*. Hutchinson. London.
1979 *Central Problems in Social Theory: Action, Structure and Contradiction in Social Analysis*. University of California Press. Berkeley.
1981 Time and Space in Social Theory. in: J. Matthes (ed.) *Lebenswelt und Soziale Probleme*. Frankfurt, New York: 88-97.
1984 *The Constitution of Society. Outline of the Theory of Structuration*. Cambridge University Press.
Glasse, R.
1987 Huli Names and Naming. *Ethnology* 26: 201-208.
Glick, L. B.
1973 Sorcery and Witchcraft. In: H. Hogbin (ed.) *Anthropology in Papua New Guinea. Readings from the Encyclopaedia of Papua and New Guinea*: 182-186. Melbourne University Press. Carlton.
Godelier, M.
1986 *The Making of Great Men*. Cambridge University Press. Cambridge.
Godelier, M. and Strathern, M. (eds.)
1991 *Big Men and Great Men. Personifications of Power in Melanesia*. Cambridge University Press. Cambridge, Paris.
Goffman, E.
1959 *The Presentation of Self in Everyday Life*. Doubleday. New York.
Gregory, C.
1982 *Gifts and Commodities*. Academic Press. London.
Harrison, S.
1982 *Stealing People's Names: Social Structure, Cosmology and Politics in a Sepik River Village*. Unpubl. Ph.D. Thesis. Australian National University Canberra.
1985a Concepts of the Person in Avatip Religious Thought. *Man* 20: 115-130.
1985b Ritual Hierarchy and Secular Equality in a Sepik River Village. *American Ethnologist* 12: 413-426.
Hauser-Schäublin, B.
1987 Ritueller Wettstreit mit Feldfrüchten: Yamsfeste im Sepik-Gebiet, Papua Neuguinea. *Verhandlungen der Naturforschenden Gesellschaft in Basel* 94: 335-365.
1989 *Kulthäuser in Nordneuguinea*. Abhandlungen und Berichte des Staatlichen Museums für Völkerkunde Dresden, Band 43. Akademie Verlag. Berlin.
Höltker, G.
1963 Neue Materialien über den Todeszauber in Neuguinea. *Anthropos* 58: 333-371
Hogbin, H. and Wedgwood, C.
1953 Local grouping in Melanesia. *Oceania* 23: 241-276; 24: 58-76

Huber-Greub, B.
1988 *Kokospalmenmenschen: Boden und Alltag und ihre Bedeutung im Selbstverständnis der Abelam von Kimbangwa (East Sepik Province, Papua New Guinea).* Basler Beiträge zur Ethnologie 27. Wepf & Co. Basel.
Jarvie, I. C.
1964 *The Revolution in Anthropology.* Routledge and Kegan. London.
Jinks, R.; Biskup, P.; Nelson, H. (eds.)
1973 *Readings in New Guinea History.* Angus and Robertson. London.
Jolly, M. and Thomas, N. (eds.)
1992 The Politics of Tradition in the South Pacific. *Oceania* (Special Issue) 62.4.
Josephides, L.
1985 *The Production of Inequality. Gender and Exchange among the Kewa.* Tavistock. London.
Kaberry, P.
1940/41 The Abelam Tribe, Sepik District, New Guinea: a Preliminary Report. *Oceania* 11: 233-258, 345-367.
Kale, J.
1985 The Religious Movement among the Kyaka Enga. In: G. Trompf and C. Loeliger (eds.) *New Religious Movements in Melanesia*: 45-74. University of Papua New Guinea and University of the South Pacific. Suva.
Kapferer, B.
1976 Introduction: Transactional Models Reconsidered. In: B. Kapferer (ed.) *Transaction and Meaning. Directions in the Anthropology of Exchange and Symbolic Behaviour*: 1-22. Institute for the Study of Human Issues. Philadelphia.
Karp, I.
1986 Agency and Social Theory: A Review of Anthony Giddens. *American Ethnologist* 13: 131-137.
Kay, P.
1965 A Generalization of the Cross/Parallel Distinction. *American Anthropologist* 67: 30-43.
Kearney, M.
1995 The Local and the Global: The Anthropology of Globalization and Transnationalism. *Annual Review of Anthropology* 24: 547-565.
Keesing, R.
1975 *Kin Groups and Social Structure.* Holt, Rhinehart and Winston. New York.
1982 Kastom in Melanesia: an Overview. In: R. Kessing and R. Tonkinson (eds.) *Reinventing Traditional Culture: The Politics of Kastom in Island Melanesia.* Special Issue, Mankind 13. 4: 297-301.
Keesing, R. and Tonkinson, R. (eds.)
1982 Reinventing Traditional Culture: The Politics of Kastom in Island Melanesia. *Mankind* 13.4 (Special Issue).

Kelly, R.
1977 *Etoro Social Structure. A Study in Cultural Contradiction.* University of Michigan Press. Ann Arbor.
1993 *Constructing Inequality. The Fabrication of a Hierarchy of Virtue among the Etoro.* University of Michigan Press. Ann Arbor.
Langness, L.
1964 Some problems in the Conceptualization of Highland Social Structures. in: J.Watson (ed.), *New Guinea: the Central Highlands.* American Anthropologist, Special Publication 66. 2: 162-182
Lawrence, P.
1964 *Road Belong Cargo.* Melbourne University Press. Melbourne.
Lawrence, P. and Hogbin, I.
1967 *Studies in New Guinea Land Tenure.* Sydney University Press. Sydney.
Laycock, D.
1973 *Sepik Languages - Checklist and Preliminary Classification.* Pacific Linguistics, Series B, No. 25. Australian National University. Canberra.
Lea, D.
1964 *Abelam Land and Subsistence: Swidden Horticulture in an Area of High Population Density, Maprik, New Guinea.* Unpubl. Ph. D. Thesis. Australian National University. Canberra.
1965 The Abelam: A Study in Local Differentiation. *Pacific Viewpoint* 6: 191-214.
Leavitt, S.
1988 *Is it Sorcery? Motivations behind Sorcery Attributions among the Bumbita Arapesh.* Unpublished Paper.
1989 *Cargo, Christ and Nostalgia for the Dead: Themes of Intimacy and Abandonment in Bumbita Arapesh Social Experience.* Ph.D. Dissertation. University of California, San Diego. University Microfilms.
1995a Political Domination and the Absent Oppressor: Images of Europeans in Bumbita Arapesh Narratives. *Ethnology* 34: 176-193
1995b Seeking Gifts from the Dead: Long-term Mourning in a Bumbita Arapesh Cargo Narrative. *Ethos* 23: 453-473
Ledermann, R.
1981 Sorcery and Social Change in Mendi. In: M. Zelenietz and S. Lindenbaum (eds.) *Sorcery and Social Change in Melanesia*: 15-27. Social Analysis 8 (Special Issue).
1986 *What Gifts Engender: Social Relations and Politics in Mendi, Highland Papua New Guinea.* Cambridge University Press. Cambridge.
Lee, R. B.
1979 *The !Kung San: Men, Women, and Work in a Foraging Society.* Cambridge University Press. New York.

Lindenbaum , S.
1981 Images of the Sorcerer in Papua New Guinea. In: M. Zelenietz and S. Lindenbaum (eds.) *Sorcery and Social Change in Melanesia*: 119-128. Social Analysis 8 (Special Issue).
Lindstrom, L.
1982 Leftamap Kastom: The Political History of Tradition on Tanna (Vanuatu).In: R. Kessing, R. Tonkinson (eds.) *Reinventing Traditional Culture: The Politics of Kastom in Island Melanesia.* Special Issue, Mankind 13. 4: 316-329.
Losche, D.
1990 Utopian Visions and the Division of Labour in Abelam Society. in: N. Lutkehaus et al. (eds.) *Sepik Heritage. Tradition and Change in Papua New Guinea*: 395-401. Carolina Academic Press. Durham.
Lowie, R. H.
1928 A Note on Relationship Terminology. *American Anthropologist* 30: 263-267.
Lutkehaus, N.
1985 *The Flutes of the Tanepoa: the Dynamics of Hierarchy and Equivalence in Manam Society*. Unpubl. Ph.D. thesis. Columbia University.
1990 Hierarchy and 'Heroic Society': Manam Variations in Sepik Social Structure. *Oceania* 60: 179-197.
McDowell, N.
1980 It's Not What You Are But How You Give That Counts: the Role of Exchange in a Melanesian Society. *American Ethnologist* 7: 58-70.
1990a Competitive Equality in Melanesia: an Exploratory Essay. *Journal of the Polynesian Society* 99:179-204.
1990b Person, Reciprocity, and Change: Explorations of Burridge in Bun. in: N. Lutkehaus et al. (eds.) *Sepik Heritage. Tradition and Change in Papua New Guinea*: 343-350. Carolina Academic Press. Durham.
Mair, L.
1970 *Australia in New Guinea*. Melbourne University Press. Carlton.
Malinowski, B.
1922 *Argonauts of the Western Pacific*. Routledge and Kegan. London.
1926 *Crime and Custom in Savage Society*. International Library of Psychology, Philosophy and Scientific Method. London.
Martin, J. D.
1952 The Sangguma Cult. *South Pacific* 6: 461-463.
1952/53 *Dreikikir Patrol Report*, No. 6. Unpubl. Report. National Archives of Papua New Guinea. Port Moresby.
Mauss, M.
1925 *L'essai sur le Don*. Mouton. Paris.

May, R. (ed.)
1982a *Micronationalist Movements in Papua New Guinea*. Political and Social Change Monograph 1. Australian National University. Canberra.
May, R.
1982b Micronationalism in Perspective. In: R. May (ed.) *Micronationalist Movements in Papua New Guinea*: 1-28. Political and Social Change Monograph 1. Australian National University. Canberra.
May, R. and Spriggs, M. (eds.)
1990 *The Bougainville Crisis*. Crawford House Press. Bathurst.
Mead, M.
1938 *The Mountain Arapesh. I: An Importing Culture*. Anthropological Papers of the American Museum of Natural History 36: 139-349.
1940 *The Mountain Arapesh. II: Supernaturalism*. Anthropological Papers of the American Museum of Natural History 37: 317-451.
1947 *The Mountain Arapesh III: Socio-economic Life*. Anthropological Papers of the American Museum of Natural History 40: 163-232.
Mitchell, J. C.
1975 *Social Networks in Urban Situations. Analyses of Personal Relationships in Central African Towns*. University Press. Manchester.
Mitchell, W.
1978 On Keeping Equal: Polity and Reciprocity among the New Guinea Wape. *Anthropological Quarterly* 51. 1: 5-16.
Murdock, G.
1949 *Social Structure*. Macmillan. New York.
Myers, F.
1979 Emotions and the Self: A Theory of Personhood and Political Order Among Pintupi Aborigines. *Ethos* 7: 343-370.
1986 Reflections on a Meeting: Structure, Language, and the Polity in a Small-scale Society. *American Ethnologist* 13: 430-447.
Narokobi, B.
1980 *The Melanesian Way*. Pacific Publications. Sydney.
Nekitel, O.
1985 *Sociolinguistic Aspects of Abu', a Papuan Language of the Sepik Area, Papua New Guinea*. Unpubl. Ph.D. Thesis. Australian National University. Canberra.
Nicholas, R.
1965 Factions: A Comparative Analysis. In: M. Banton (ed.) *Political Systems and the Distribution of Power*: 21-61. A.S.A. Monograph 2. Tavistock. London.

O'Collins, M. (ed.)
1986 *Youth and Society: Perspectives from Papua New Guinea*. Political and Social Change Monograph 5. Australian National University. Canberra.
Obrist, B.
1992 *Small But Strong. Cultural Contexts of (Mal-)Nutrition among the Northern Kwanga (East Sepik Province, Papua New Guinea)*. Basler Beiträge zur Ethnologie 34. Wepf & Co. Basel.
Ortner, S.
1984 Theory in Anthropology since the Sixties. *Comparative Studies in Society and History* 26: 126-166.
Ortner, S. and Whitehead, H. (eds.)
1981 *Sexual Meanings*. Cambridge University Press. Cambridge.
Osborne, R.
1986 OPM and the Quest for West Papua Unity. In: R. May (ed.) *Between Two Nations. The Indonesia-Papua New Guinea Border and West Papua Nationalism*: 49-64. Robert Brown and Associates. Bathurst.
Otto, T.
1992 The Ways of Kastam: Tradition as Category and Practice in a Manus Village. *Oceania* 62.4: 264-283.
Paine, R.
1976 Two Modes of Exchange and Mediation. In: B. Kapferer (ed.) *Transaction and Meaning. Directions in the Anthropology of Exchange and Symbolic Behaviour*: 63-86. Institute for the Study of Human Issues. Philadelphia.
Paliwala, A.
1982 Law and Order in the Village: The Village Courts. in: D. Weisbrot; A. Paliwala; A.Sawyerr (eds.) *Law and Social Change in Papua New Guinea:* 191-217. Butterworths. Sydney.
Patterson, M.
1974/75 Sorcery and Witchcraft in Melanesia. *Oceania* 45.2: 132-160, 45.3: 212-234.
Ploeg, A.
1969 *Government in Wanggulam*. Martinus Nijhoff. The Hague.
Popper, K.
1950 *The Open Society and Its Enemies*. Princeton University Press. Princeton.
Pouwer, J.
1960 Loosely Structured Societies in the Netherlands New Guinea. *Bijdraagen tot de Taal-, Land-, en Volkenkunde* 116: 109-118.
Radcliffe-Brown, A. R.
1950 Introduction. In: A.R. Radcliffe-Brown and D. Forde (eds.) *African Systems of Kinship and Marriage*: 1-85 Oxford University Press. London, New York, Toronto.

Reller, H. and Kiessig, W.
1985 Handbuch Religiöse Gemeinschaften: Freikirchen, Sondergemeinschaften, Weltanschauungen, Missionierende Kirchen des Ostens, Neureligionen. Gütersloher Verlag. Gütersloh.

Rogers, M.
1983 *Sociology, Ethnomethodology, and Experience*. Cambridge University Press. London.

Rosaldo, M.
1980 *Knowledge and Passion: Ilongot Notions of Self and Social Life*. Cambridge University Press. Cambridge.

Roscoe, P.
1990 Male Initiation among the Yangoru Boiken. In: N. Lutkehaus et al. (eds.) *Sepik Heritage. Tradition and Change in Papua New Guinea*: 402-413. Carolina Academic Press. Durham.

Rowley, C. D.
1972 *The New Guinea Villager. A Retrospect from 1964*. Cheshire. Melbourne.

Sahlins, M.
1958 *Social Stratification in Polynesia*. AES Monograph 25. University Washington Press. Seattle.
1966 Poor Man, Rich Man, Big Man, Chief: Political Types in Melanesia and Polynesia. In: I. Hogbin and L. Hiatt (eds.) *Readings in Australian and Pacific Anthropology*: 159-179. Melbourne University Press. Melbourne. (Orig. publ. in: Comparative Studies in Society and History 5, 1963: 285-300.)
1974 *Stone Age Economics*. Tavistock Publications. London.
1981 *Historical Metaphors and Mythical Realities: Structure in the Early History of Sandwich Island Kingdoms*. University of Michigan Press. Ann Arbor.

Scaglion, R.
1981 *Seasonal Patterns in Western Abelam Conflict Management Practices. The Ethnography of Law in the Maprik Sub-Province*. Ann Arbor. University Microfilms International.

Schindlbeck, M.
1990 Tradition and Change in Kwanga Villages. In: N. Lutkehaus et al. (eds.) *Sepik Heritage. Tradition and Change in Papua New Guinea*: 232-240. Carolina Academic Press. Durham.

Schlegel, A.
1977 *Sexual Stratification. A Cross Cultural View*. Columbia University Press. New York.

Schmitz, C. A.
1959 Todeszauber in Nordost-Neuguinea. *Paideuma* 7: 35-67.

Schofield, F. D. and Parkinson, A. D.
1963 Social Medicine in New Guinea: Beliefs and Practices Affecting Health among the Abelam and Wam Peoples of the Sepik District. *Medical Journal of Australia* 1: 1-8, 29-33.
Schweizer, T.
1996 *Muster sozialer Ordnung: Netzwerkanalyse als Fundament der Sozialethnologie*. Berlin: Reimer Verlag.
Schwimmer, E.
1973 *Exchange in the Social Structure of the Orokaiva. Traditional and Emergent Ideologies in the Northern District of Papua*. Hurst and Company. London.
Seib, R.
1994 *Papua-Neuguinea zwischen isolierter Stammesgesellschaft und weltwirtschaftlicher Integration*. Mitteilungen des Instituts für Asienkunde 227. Hamburg.
Seligman, C. G.
1910 *The Melanesians of British New Guinea*. Cambridge University Press. Cambridge.
Shand, R. and Straatmans, W.
1974 *Transition from Subsistence: Cash Crop Development in Papua New Guinea*. New Guinea Research Bulletin 54. Canberra, Port Moresby.
Siegel, B. and Beals, A.
1960 Pervasive Factionalism. *American Anthropologist* 62: 394-417.
Sillitoe, P.
1978 Exchange in Melanesian Society. *Ethnos* 43: 2-29.
1979 *Give and Take. Exchange in Wola Society*. Australian National University Press. Canberra, London.
Spiro, M. E.
1968 Factionalism and Politics in Village Burma. In: M. J. Swartz (ed.) *Local-Level Politics. Social and Cultural Perspectives*: 401-421. Aldine Publishing Company. Chicago.
Standish, B.
1992 Papua New Guinea in 1992: Challenges for the State. *Asian Survey* 33: 211-217.
Stanley, G.
1934 The Matapau Region, near Aitape, New Guinea. *Australian Geographer* 2 (3): 3-8
Stephen, M. (ed.)
1987 *Sorcerer and Witch in Melanesia*. Melbourne University Press. Carlton.

Stephenson, N.
1987 Die Strasse nach Wam. Über Nutzung und Bedeutung der Strasse in einem ländlichen Gebiet Papua Neuguineas. In: M. Münzel (ed.) *Neuguinea. Nutzung und Deutung der Umwelt*: 349-379. Roter Faden zur Ausstellung 12. Museum für Völkerkunde. Frankfurt.
1988 *Wotal - A Year in the Life of a Youth Group*. Research Report 58. Educational Research Unit. University of Papua New Guinea.
1994 Gais Nein zu Apels Appell. Eine millenarische Mythe als Kulturkritik bei den Wam (East Sepik Province, Papua-Neuguinea). In: B. Hauser-Schäublin (ed.) *Geschichte und mündliche Überlieferung in Ozeanien*: 73-90. Basler Beiträge zur Ethnologie 37. Wepf & Co. Basel.
1995 Alte Bedrohungen, moderne Zeiten. Über das Kriegswesen bei den Wam (Papua-Neuguinea) in Vergangenheit und Gegenwart. In: P. Bräunlein/A. Lauser (eds.) *Krieg und Frieden. Ethnologische Perspektiven*: 173-194. Kea, Zeitschrift für Kulturwissenschaften, Sonderband 2. Bremen)
1998 Contrasting Transcripts: Constructing Images and Identities in Mediations among the Wam People of Papua New Guinea. In: J. Wassmann (Hrsg.) *Pacific Answers to Western Hegemony. Cultural Practices of Identity Construction*: 143-168. Oxford, New York. Berg.

Strathern, A.
1971 *The Rope of Moka*. Cambridge University Press. Cambridge.
1982 *Inequality in New Guinea Highland Societies*. Cambridge University Press. Cambridge.
1995 Violence and Political Change in Papua New Guinea. *Pacific Studies* 16: 41-60.

Strathern, M. (ed.)
1987 *Dealing with Inequality*. Cambridge University Press. Cambridge.

Tonkinson, R.
1982 Kastom in Melanesia: Introduction. In: R. Kessing and R. Tonkinson (eds.) *Reinventing Traditional Culture: The Politics of Kastom in Island Melanesia.* Special Issue, Mankind 13. 4: 302-305.

Townsend, G. W. L.
1968 *District Officer. From Untamed New Guinea to Lake Success, 1921-46.* Pacific Publications. Sydney.

Turner, V.
1957 *Schism and Continuity in an African Society*. Manchester University Press. Manchester.
1969 *The Ritual Process. Structure and Anti-structure*. Routledge and Kegan. London.

Tuzin, D. F.
1972 Yam Symbolism in the Sepik: An Interpretive Account. *Southwestern Journal of Anthropology* 28: 230-254.
1976 *The Ilahita Arpesh: Dimensions of Unity*. University of California Press. Berkeley and Los Angeles.
1977 Kinship Terminology in a Linguistic Setting: a Case Study. In: S. Wurm (ed.) *New Guinea Language Areas and Language Study Vol. 3*: 101-129. Pacific Linguistics Series C 40. Australian National University. Canberra.
1980 *The Voice of the Tamberan. Truth and Illusion in Ilahita Arapesh Religion*. University of California Press. Berkeley, Los Angeles, London.
1989 Prospects of Village Death in Ilahita. *Oceania 59*: 81-104.
1997 *The Cassowary's Revenge. The Life and Death of Masculinity in a New Guinea Society*. University of Chicago Press. Chicago, London.

Tyler, S.
1966 Parallel/Cross: an Evaluation of Definitions. *Southwestern Journal of Anthropology* 22: 416-432.

Van der Grijp, P. and Van Meijl, T. (eds.)
1993 *Politics, tradition and change in the Pacific*. Bijdragen tot de taal-, land-, en volkenkunde 149.4. KITVL Press. Leiden.

Verdon, M.
1979 Sleeping Together: The Dynamics of Residence among the Abutia Ewe. *Journal of Anthropological Research* 35: 401-425.
1980 Descent: An Operational View. *Man* 15: 129-150.

Walter, M.
1981 Cult Movements and Community Development Associations: Revolution and Evolution in the Papua New Guinea Countryside. In: R. Gerritsen; R. May; M. Walter *Road Belong Development. Cargo Cults, Community Groups and Self-Help Movements in Papua New Guinea*: 81-105. Working Paper 3. Department of Political and Social Change. Australian National University. Canberra.

Wassmann, J. (ed.)
1998 *Pacific Answers to Western Hegemony. Cultural Practices of Identity Construction*. Oxford, New York: Berg.

Weber, M.
1957 *The Theory of Social and Economic Organization*. Edited by T. Parsons (First published as Part One of *Wirtschaft and Gesellschaft*). Free Press. Glencoe.

Weiner, A.
1976 *Women of Value, Men of Renown: New Perspectives in Trobriand Exchange*. University of Texas Press. Austin.

Weiner, J.
1982 Substance, Siblingship and Exchange: Aspects of Social Structure in New Guinea. *Social Analysis* 11: 3-34.
White, D. and Schweizer, T. (eds).
1998 *Kinship, Networks and Exchange.* Cambridge: Cambridge University Press.
White, G. M. and Lindstrom, L. (eds.)
1993 *Custom Today*. Anthropological Forum 6.4.
Wilson, B.
1974 *Magic and the Millennium*. Paladin. St. Albans.
Woodburn, J.
1982 Egalitarian Societies. *Man* 17: 431-451.
Worsley, P.
1957 *The Trumpet Shall Sound: A Study of "Cargo" Cults in Melanesia.* McGibbon and Kee. London.

LIST OF PLATES:

1. A view from the main ridge looking towards the ridge of Simete.

2. The hamlet of Senguolme on the Simete ridge, with ground-houses built in the traditional stile.

3. The road in the centre of the village. The houses on the right belong to the hamlet of Tamame.

4. A morning scene in Enniki. The little plaza in the foreground used to be the ceremonial ground when Enniki was still a ceremonial centre.

5. Mahaite Ningaha being rubbed down with nettles by his *meinheil* Wolimbi after feeling a bout of fever.

6. Mahaite's wife Haitewa (centre) peeling yam.

7. Mahi in discussion with Mahaite, Terence, Mahaite's son-in-law, and Wolimbi (from right to left).

8. A man displaying a piksa – in this case the frond of a young betel palm – during a sorcery dispute.

9. Landime (centre, pointing) explaining the procedure of the coming food distribution to Alex (background, right) and Norbert (foreground, right).

10. Gerry Anisi (forefront) preparing the food for distribution. On the far left is Mani preparing his row.

11. A section of the New Apostolic Church world map. On the right the symbol of the NAC.

12. The richly decorated altar with the crown in the New Apostolic Church in Kitchener, Canada.

13. A NAC priest holding service. In the background the symbol of the NAC.

14. A group of NAC apostles in Los Angeles, U.S.A.

15. The chief apostle (sitting at centre) with a group of apostles seated around a table.

16. The apostles of the NAC assembled in front of the Krauss Carpet Mills.

17. Members of the NAC arriving at Skylon Tower for dinner.

18. Members of the clergy of the NAC. From left to right: priest Lawrence Peimel, deacon Henry Auinda, priest Michael Mahate, and the sub-deacon who resigned after only a few weeks. At the time the photograph was taken Patrick Sali had not yet joined the NAC.

19. Alex's new house being built by members of Wotal Youth Group.

20. Youths of Wotal thatching the roof of Alex's house.

21. A woman selecting a blouse during a second-hand clothes sale organized by Tilli Bros.

22. Norbert Anisi was one of Alex's closest supporters and a key figure in the Bisnis movement.

23. Andrew Anisi, Alex's elder brother and one of his main rivals.

24. Maurice Natile, an associate of Andrew, who played an important part in Wotal Youth Group at a later stage.

25. Alex dispensing kerosene at the Tilli Bros store.

26. Baru, Alex's Chimbu wife being groomed by a *kwalinei* of hers.

27. Alex Anisi addressing the people from various Wam villages on the occasion of the rallye he organised to celebrate his victory in the elections.

1

2

3

4

5

6

7

8

9

10

MONGOLIA
PEOPLES REPUBLIC OF CHINA
HONG KONG
TAIWAN
PHILIPPINES
CAROLINE ISLANDS
LIBYA
CHAD
SRI LANKA
INDONESIA
AUSTRALIA
NEW ZEALAND
ASIA & PACIFIC
BANGLADESH
BURMA
CAROLINE IS.
HONG KONG
INDIA
JAPAN
MALAYSIA
MARSHALL IS.
NEPAL
NEW HEBRIDES
PAKISTAN
PAPUA NEW GUINEA
PHILIPPINES
SOUTH KOREA
SRI LANKA
TAIWAN
THAILAND
WESTERN SAMOA

11

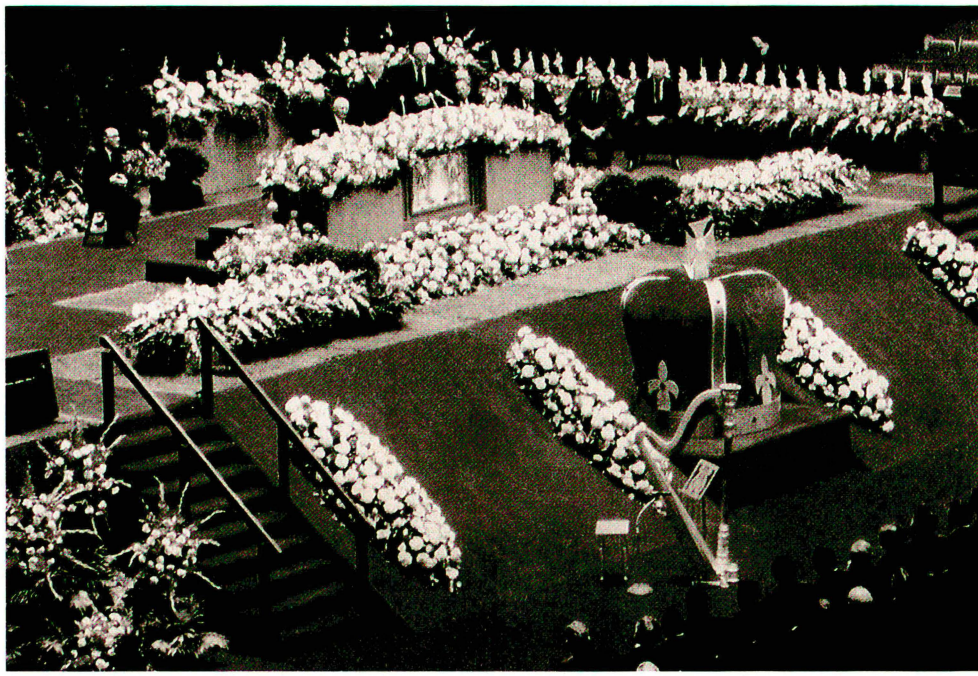

12

13

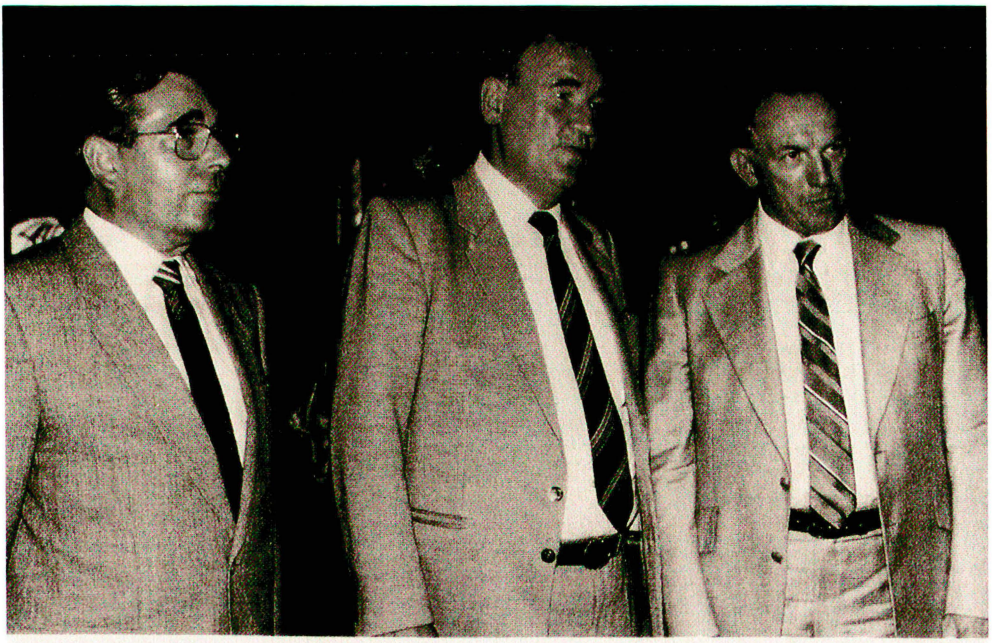

Los Angeles, California, U.S.A.

14

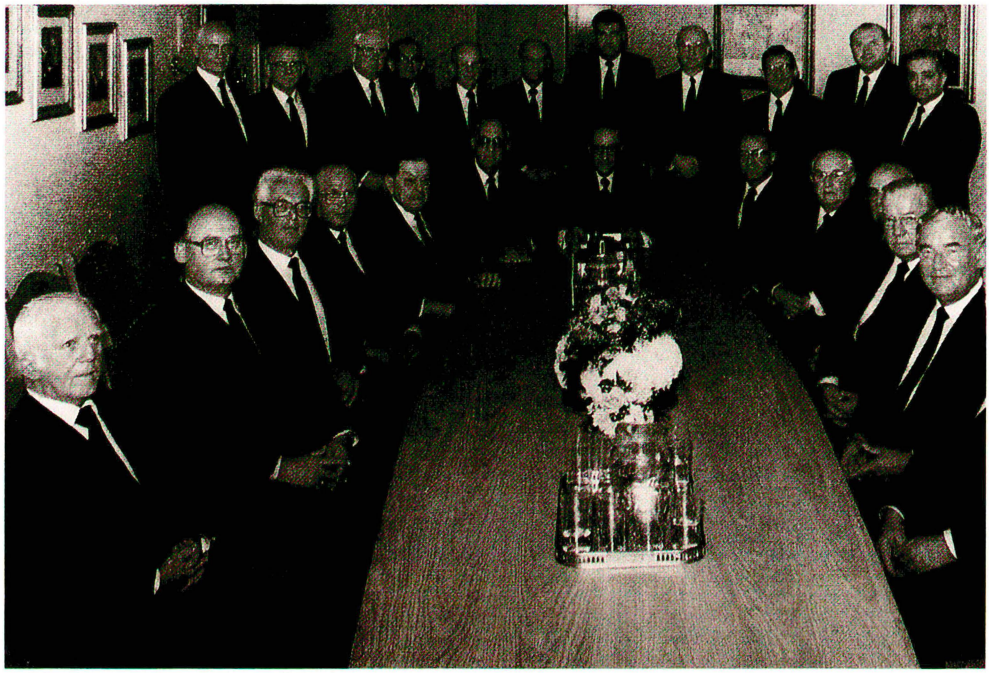

15

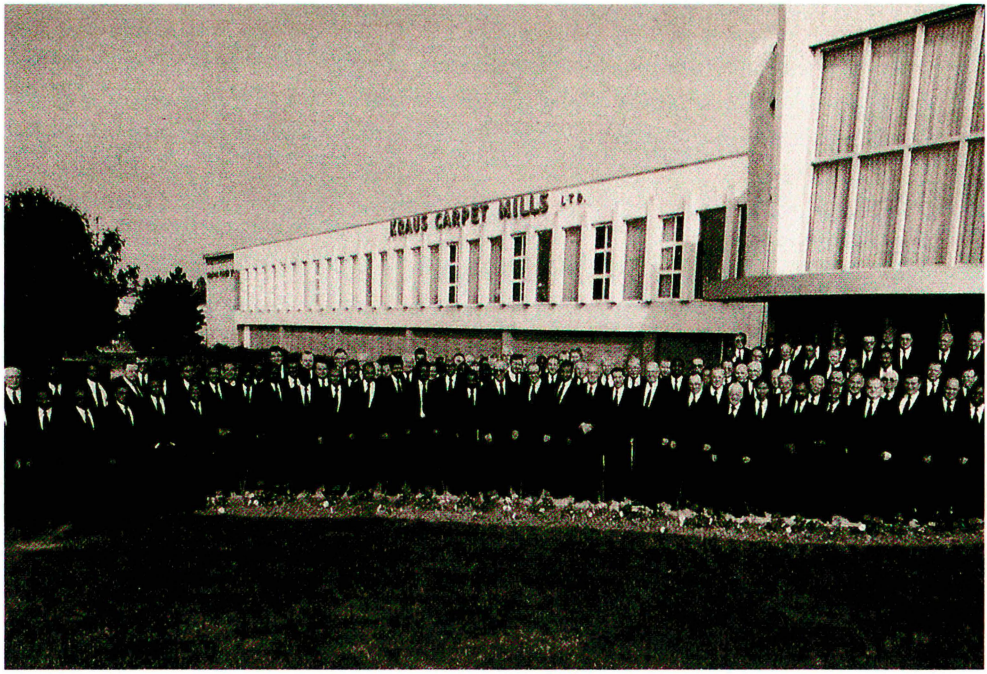

16

Guests about to have dinner at Skylon Tower

17

18

19

20

21

22

23

24

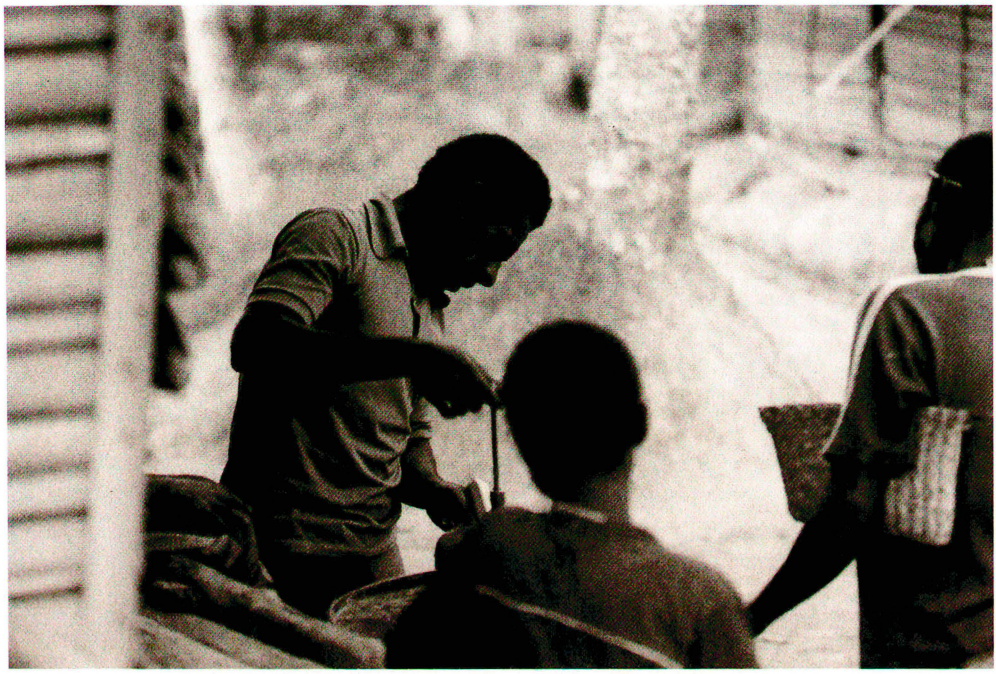

25

26

Basler Beiträge zur Geographie

Heft 1
R. Seiffert Zur Geomorphologie des Calancatales. 1960 (vergr.)

Heft 2
H.-U. Sulser Die Eisenbahnentwicklung im schweiz.-franz. Jura unter Berücksichtigung der geographischen Grundlagen. 1962

Heft 3
0. Wittmann Die Niederterrassenfelder im Umkreis von Basel und ihre kartographische Darstellung. 1961 (vergriffen)

Heft 4
W. A. Gallusser Studien zur Bevölkerungs- und Wirtschaftsgeographie des Laufener Juras. 1961 (vergriffen)

Heft 5
H. Gutersohn und C. Troll Geographie und Entwicklungsplanung. 1963

Heft 6
C. Frey Morphometrische Untersuchungen in den Vogesen. 1965

Heft 7
H. W. Muggli Greater London und seine New Towns. 1968

Heft 8
U. Eichenberger Die Agglomeration Basel in ihrer raumzeitlichen Struktur. 1968 (vergriffen)

Heft 9
D. Barsch Studien zur Geomorphogenese des zentralen Berner Juras. 1969

Heft 10
J. F. Jenny Beziehungen der Stadt Basel zu ihrem ausländischen Umland. 1969

Heft 11
W. A. Gallusser Struktur und Entwicklung ländlicher Räume der Nordwestschweiz. 1970

Heft 12
R. L. Marr Geländeklimatische Untersuchungen im Raum südlich von Basel. 1970

Heft 13
K. Rüdisühli Studien zur Kulturgeographie des unteren Goms (Wallis). Bellwald, Fiesch, Fieschertal. 1970

Heft 14
J. Rohner Studien zum Wandel von Bevölkerung und Landwirtschaft im Unterengadin. 1972 (vergriffen)

Heft 15
W. Leimgruber Studien zur Dynamik und zum Strukturwandel der Bevölkerung im südlichen Umland von Basel. 1972

Heft 16
H. Polivka Die chemische Industrie im Raume von Basel. 1974

Heft 17
P. Flaad Untersuchungen zur Kulturgeographie der Neuenburger Hochtäler von La Brévine und Les Ponts. 1974

Heft 18
L. Klug Studien zur postglazialen Gletscher- und Vegetationsgeschichte des Sustenpassgebietes. 1974

Heft 19
K. Egli Die Landschaft Belfort im mittleren Albulatal. 1978 (vergriffen)

Heft 20
H. Heim Wandel der Kulturlandschaft im südlichen Markgräflerland. 1977

Heft 21
D. Opferkuch Der Einfluss einer Binnengrenze auf die Kulturlandschaft am Beispiel der ehemals vorderösterreichisch-eidgenössischen Grenze in der Nordwestschweiz. 1977

Heft 22/23
W. Laschinger und L. Lötscher Basel als urbaner Lebensraum. 1978

Heft 24
P. Gasche Aktualgeographische Studien über Auswirkungen des Nationalstrassenbaus im Bipperamt und Gäu. 1978

Heft 25
W. Regehr Die lebensräumliche Situation der Indianer im paraguayischen Chaco. 1979

Heft 26
R. Caralp et H.-U. Sulser Etudes de géographie des transports - Transportation Studies. Union géographique internationale. 1977 - Colloque de Bâle - transports et frontière - transports et montagne. 1978

Heft 27
R. L. Marr Tourismus in Malaysia und Singapore. 1982

Heft 28
F. Falter Die Grünflächen der Stadt Basel. 1984

Heft 29
D. Simko Hong-Kong – Strassenverkäufer und Arbeiterfamilien. 1983

Heft 30
K. Wasmer Landwirtschaft an der Sprachgrenze. 1984

Heft 31
A. Kempf Waldveränderungen als Kulturlandschaftswandel – Walliser Rhonetal. 1985

Heft 32
A. Fischer Waldveränderungen als Kulturlandschaftswandel – Kanton Luzern. 1985

Heft 33
L. Lötscher Lebensqualität kanadischer Städte. 1985 (vergr.)

Heft 34
B. Vettiger-Gallusser Berggebietsförderung mit oder ohne Volk? 1986

Heft 35
J. Winkler Die Landwirtschaftsgüter der Christoph Merian Stiftung Basel. 1986 (vergriffen)

Heft 36
H. Kessler Berglandwirtschaft und Ferienhaustourismus. Wenn der Kuhstall zum Ferienhaus und das Mistseil zum Skilift wird. 1990

Heft 37
T. Frey Siedlungsflächenverbrauch im Blickwinkel der Zonenplanung. Eine Flächenanalyse in 12 solothurnischen Testgemeinden im Zeitraum 1960 – 1985.1989

Heft 38
M. Huber Grundeigentum – Siedlung – Landwirtschaft. Kulturlandschaftswandel im ländlichen Raum am Beispiel der Gemeinde Blauen (BE) und Urmein (GR). 1989

Heft 39
R. Widmer-Münch Der Tourismus in Fes und Marakech. 1990

Heft 40
F. Rossé Freiräume in der Stadt. 1990

Heft 41
D. von Arx Seminartourismus. Synthese aus Weiterbildung und Kurzreise. 1993

Heft 42
M. Furter Gemeindegrenzen im Kanton Basel-Landschaft. Zur Entwicklung und Bedeutung von Grenzen in der Kulturlandschaft. 1993

Heft 43
Ch. Merkli Lebensraum im Wandel. Eine sozialgeographische Studie über Grundeigentum und Planung in Sempach (LU) und Beckenried (NW). 1993

Heft 44
S. Lagger Güterbedarf und Güterversorgung im Drittwelt-Tourismus. 1995

Heft 45
M. Imhof Migration und Stadtentwicklung. Aktualgeographische Untersuchungen in den Basler Quartieren Iselin und Matthäus. 1998

Band 1 **C. A. Schmitz** Grundformen der Verwandtschaft. 1964 (vergriffen)

Band 2 **Festschrift Alfred Bühler** Hrsg. C.A. Schmitz und R. Wildhaber. 1965 (vergriffen)

Band 3 **P. Weidkuhn** Aggressivität, Ritus, Säkularisierung. Biologische Grundformen religiöser Prozesse. 1965 (vergriffen)

Band 4 **R. Schefold** Versuch einer Stilanalyse der Aufhängehaken vom Mittleren Sepik in Neu-Guinea. 1966 (vergriffen)

Band 5 **C. Koch** La Colonia Tovar. Geschichte und Kultur einer alemannischen Siedlung in Venezuela. 1969 (vergriffen)

Band 6 **M.-L. Nabholz-Kartaschoff** Ikatgewebe aus Nord- und Südeuropa. 1969 (vergriffen)

Band 7 **St. A. Gasser** Das Töpferhandwerk von Indonesien. 1969 (vergriffen)

Band 8 **N. V. Zanolli** Education toward Development in Tanzania. 1971 (vergriffen)

Band 9 **A. Seiler-Baldinger** Maschenstoffe in Süd- und Mittelamerika. 1971 (vergriffen)

Band 10 **M. Laubscher** Schöpfungsmythik ostindonesischer Ethnien. Eine Literaturstudie über die Entstehung der Welt und die Herrschaft der Menschen. 1971 (vergriffen)

Band 11 **R. Peterli** Die Kultur eines Bariba-Dorfes im Norden von Dahome. 1971 (vergriffen)

Band 12 **Chr. Kaufmann** Das Töpferhandwerk der Kwoma in Nord-Neuguinea. 1972 (vergriffen)

Band 13 **R. Boser-Sarivaxévanis** Les tissus de l'Afrique Occidentale. 1972 (vergriffen)

Band 14 **A. Seiler-Baldinger** Systematik der textilen Techniken. 1973 (vergriffen)

Band 15 **R.-J. Moser** Die Ikattechnik in Aleppo. 1974 (vergriffen)

Band 16 **A. Bühler und E. Fischer** Musterung von Stoffen mit Hilfe von Pressschablonen. 1974

Band 17 **R. Vermot-Mangold** Die Rolle der Frau bei den Kabre in Nord-Togo. 1977 (vergriffen)

Band 18 **B. Hauser-Schäublin** Frauen in Kararau. Zur Rolle der Frau bei den Iatmul am Mittelsepik, Papua New Guinea. 1977

Band 19 **M. Schindlbeck** Sago bei den Sawos (Mittelsepik, Papua New Guinea). 1980

Band 20 **G. van der Weijden** Indonesische Reisrituale. 1981

Band 21 **F. Weiss** Kinder schildern ihren Alltag. Die Stellung des Kindes im ökonomischen System einer Dorfgemeinschaft in Papua New Guinea (Palimbei, Iatmul, Mittelsepik). 1981

Band 22 **J. Wassmann** Der Gesang an den Fliegenden Hund. Untersuchungen zu den totemistischen Gesängen des Dorfes Kandingei (Mittelsepik, Papua New Guinea). 1982

Band 23 **M. Stanek** Sozialordnung und Mythik in Palimbei (Iatmul, Mittelsepik), Papua New Guinea. 1983

Band 24 **D. Schaareman** Tatulingga: Tradition and Continuity. An Investigation in Ritual and Social Organization in Bali. 1986

Band 25 **B. Gardi** Ein Markt wie Mopti. Handwerkerkasten und traditionelle Techniken in Mali. 1985 (vergriffen)

Band 26 **B. Engelbrecht** Töpferinnen in Mexiko. (Patamban und Tzintzuntzan, Michoacán, West-Mexiko). 1987

Band 27 **B. Huber-Greub** Kokospalmenmenschen. Boden und Alltag in Kimbangwa (Abelam, East Sepik Province, Papua New Guinea). 1988

Band 28 **J. Wassmann** Der Gesang an das Krokodil. Die rituellen Gesänge des Dorfes Kandingei an Land und Meer, Pflanzen und Tiere (Mittelsepik, Papua New Guinea). 1988

Band 29 **B. Lüem** Wir sind wie der Berg, lächelnd aber stark. Eine Studie zur ethnischen Identität der Tenggeresen in Ostjava. 1988

Band 30 **B. Engelbrecht und B. Gardi** Man Does Not Go Naked. Textilien und Handwerk aus afrikanischen und anderen Ländern. 1989

Band 31 **I. Bell-Krannhals** Haben um zu geben. Eigentum und Besitz auf den Trobriand-Inseln, Papua New Guinea. 1990

Band 32 **A. Seiler-Baldinger** Systematik der textilen Techniken (überarbeitete Neuauflage). 1991

Band 33 **Ch. Kocher Schmid** Of People and Plants. A Botanical Ethnography of Nokopo Village, Mandang and Morobe Provinces, Papua New Guinea. 1991

Band 34 **B. Obrist van Eeuwijk** Small but Strong. Social and Cultural Context of (Mal-)Nutrition among the Northern Kwanga (East Sepik Province, Papua New Guinea). 1992

Band 35 **V. Keck** Falsch gehandelt – schwer erkrankt. Kranksein bei den Yupno in Papua New Guinea aus ethnologischer und biomedizinischer Sicht. 1992

Band 36 **J. Schmid und Chr. Kocher Schmid** Söhne des Krokodils. Männerhausrituale und Initiation in Yensan, Zentral-Iatmul, East Sepik Province, Papua New Guinea. 1992

Band 37 **B. Hauser-Schäublin** (Hrsg.) Geschichte und mündliche Überlieferung in Ozeanien. 1994

Band 38 **L. Roost Vischer** Mütter zwischen Herd und Markt. Das Verhältnis von Mutterschaft, sozialer Elternschaft und Frauenarbeit bei den Moose (Mossi) in Ouagadougou/Burkina Faso. 1997

Band 39 **A.E. Schmidt** Paul Wirz. Ein Wanderer auf der Suche nach der "wahren Natur". 1998

Basler Beiträge zur Ethnologie

In Kommission bei Wepf & Co. AG, CH–4001 Basel